On the Single-Zone Modeling for Optimal Climate Control of a Real-Sized Livestock Stable System

Yang, Zhenyu; Greisen, Stefan K.; Hansen, Jette R.; Pedersen, Niels A.; Jensen, Martin R.

Published in:
The 2009 IEEE International Conference on Mechatronics and Automation

DOI (link to publication from Publisher):
10.1109/ICMA.2009.5244909

Publication date:
2009

Document Version
Publisher's PDF, also known as Version of record

Proceedings of the 2009 IEEE
International Conference on Mechatronics and Automation
August 9 - 12, Changchun, China

On the Single-Zone Modeling for Optimal Climate Control of a Real-Sized Livestock Stable System

Zhenyu Yang, Stefan K. Greisen, Jette R. Hansen, Niels A. Pedersen
Department of Electronic Systems, Aalborg University, Esbjerg Campus
Niels Bohrs Vej 8, DK-6700 Esbjerg, Denmark

Martin R. Jensen
SKOV A/S
Glyngøre, DK-7870 Roslev, Denmark

***Abstract*—This paper discusses mathematical modeling for development and implementation of a model-based optimal indoor climate control for a real-sized livestock stable system. As a typical modern and large-sized stable system, the considered stable uses hybrid ventilation and low-pressure climate control strategies. Due to the main concern of the feasibility for commercializing the developed control system, the single-zone concept is adopted for modeling the considered system. Based on the energy balance and mass balance analysis, the thermal and flow dynamics of the indoor climate are quantitatively described. The models for air inlets, outlets and their driving systems as well as the heating systems, one is used to heat up the stable and another one is used to emulate the animals' heat generation, are also extensively studied. The system parameters are identified through arranged experiments. The developed model is further validated through comparison with real system's operations. Even though some deviations in terms of the indoor temperature can be observed, the developed model shows consistent intendancy with the real system. Nevertheless, some modeling errors can be compensated by an optimal (constraint MPC) controller developed based on this simple model. The obtained results show a clear feasibility to use a simple single-zone model for developing a sophisticated optimal control to handle large-sized climate control problem.**

***Index Terms*—Modeling, indoor climate, model predictive control, stable system**

I. INTRODUCTION

An efficient indoor climate control for a livestock stable not only means financial benefits in terms of less energy consumption, less maintenance costs and better production rates, but also gives a good animal welfare and helps reduce global warming problem [3], [6], [9], [12]. This kind of control system is usually sophisticated with respect to its expected functions of coordination and control of different components/subsystems' operations in some optimal sense. The development of an efficient and optimal climate control for a large-sized live-occupant building system is still far beyond mature comparing with the status for other industrial control systems [6]. Some recent investigations, such as [2], [5], [9], [11], [12], [13], [14], showed the huge potential to use the model-based method for developing advanced climate control systems.

A typical modern stable system is usually equipped with a hybrid ventilation [3], thereby the modeling need incorporate at least three key aspect: the natural ventilation mode, the mechanical ventilation mode and the control strategy [6]. The modeling techniques can range from a simple single-zone [9], [11] through to multi-zone and computational fluid dynamics (CFD) [3], [8]. From the control design point of view, CFD often leads to too complicated model along with its demanding computation power, therefore, we won't consider this kind of method here. The multi-zone modeling method has been used in [5], [11] and some advanced controllers such as MPC have been developed and studied through simulation in [13]. The multi-zone model can provide a good and reasonable precision to reflect the real system, and meanwhile also has a good orientation for control design. however, so far there are not many successful real-world applications where the climate controller developed through this method is implemented in a real-sized system. One challenging issue in implementation of this kind of controller is to handle a heavy computation load, which could significantly increase the costs for commercialized control system. Furthermore, with the concern of checking the commercialization feasibility of the developed controller, we decided to pick up the simplest single-zone strategy for the current modeling investigation. One technical observation to support this decision lies in the fact that the concerned stable system is internally completely open and there are no any obstacles except the heating pipe lines and transducer cables. Thereby it could be sufficient enough to be approximated by a single-zone [6]. We believe the procedure proposed here can be reasonably extended to handle multi-zone situation. Based on this developed model, a constraint MPC is developed and implemented in the real system in [15]. It can be observed that some modeling errors due to this simple single-zone method can be compensated by

Fig. 1. The outlook of the stable facility in Syvsten, Denmark

978-1-4244-2693-5/09/$25.00 ©2009 IEEE

the developed optimal controller. More details can be found in [15].

The considered stable system uses a low-pressure hybrid ventilation principle. In contrast to steady-state balance models [6], [9], the dynamic system modeling [7] is considered in the following. Based on the energy balance and mass balance, the thermal and flow dynamics of the indoor climate are described by differential equations. The models for air inlets, outlets and their driving systems as well as the heating systems, one is used to heat up the stable and another one is used to emulate the animals' heat generation, are also extensively studied. The system parameters are identified through arranged experiments. The developed model is further validated through comparison with real system's operations. Even though some deviations in terms of the indoor temperature can be observed, the developed model shows consistent intendancy with the real system. The obtained results show a clear feasibility to use a simple single-zone model for developing a sophisticated optimal control to handle large-sized climate control problem.

The rest of the paper is organized as the following: Section II introduces the considered stable facility; Section III discusses theoretical modeling of the considered system; Section IV briefs parameter identification and model validation; and finally we conclude the paper in Section V.

II. CONSIDERED SYSTEM

The considered stable facility is shown in Fig.1. This stable was originally constructed as a boiler house and was equipped with SKOV commercial climate control system. The physical size of this stable is internally 12m wide, 64m long and 5.25m high (to ridge). There are 31 air inlets on each long-side wall and total 5 air outlets on top of the roof. The inlets are of the type DA 1000 from SKOV A/S. One inlet consists of an adjustable shutter which is controlled by a winch motor via a cord drive. A potential meter is attached on the motor shaft so as to measure the opening angle of the shutter. One inlet requires $0.6m \times 0.275m$ mounting area. The air outlets are of the type DA 600 from SKOV A/S. This outlet consists of a variable-speed fan insider a chimney tube. Beneath the fan there also is a turnable plat which can be placed in positions from 0 to 90 degree. The outlet tube has $0.65m$ diameter and the air flow can be up to $17.8\frac{m^3}{s}$. A number of air flowmeters are installed inside the outlet tubes so as to measure the air flow.

Due to the specific Scandinavian climate, there is no any mechanical cooling setup insider the stable. The cooling is done purely through the natural cooling mechanism. The heating system inside the stable is configured for two different purposes: one heating system is used to heat up the stable air if requested; another is used to emulate the heat produced by the animals in the normal stable circumstance. Both heating systems are connected to one oil furnace. The

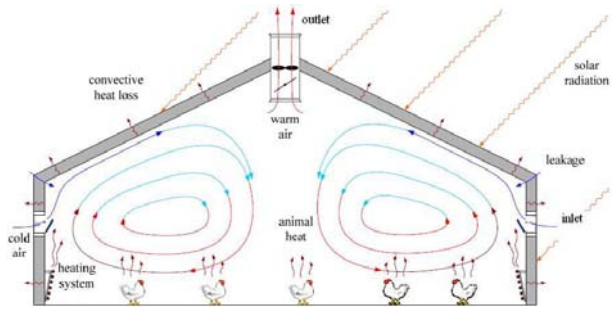

Fig. 2. The schematic ventilation principle inside a stable

warm water is circulated through a set of pipe lines, which are mounted along the walls near the floor and suspended with steel bearings. A set of temperature transducers typed of DOL 15 temperature sensor from SKOV A/S are distributed inside the stable to measure the indoor temperatures. The outdoor weather conditions in terms of wind speed, direction and the temperature are provided through a Davis Monitor II weather monitor. More details about the facility and setups can be found in [10]. It should be remarked that the research done in [5], [12], [13] is also based on the same testing system.

III. SINGLE-ZONE MODELING

Concerning the single-zone modeling strategy, the following assumptions are made:

- The temperature and air pressure inside the stable are assumed uniformly distributed; In practice, the average of several temperature measurements from different locations is used for model validation and feedback purpose as well;
- The indoor air pressure is always lower than the outdoor pressure;
- Only the temperature is considered as a unique criterion to evaluate the climate control system, i.e., the animal thermal comfort is defined as the stable temperature should be kept within a proper range, e.g., from 20 degree to 22 degree [8].

A schematic diagram of airflows, the heat generation and the heat loss in a stable is illustrated in Fig.2. The modeling of the considered system should consist of the following key parts: the stable's thermal and air flow dynamics; air inlets and outlets; the heating system; the animal thermal influence and other disturbances as well, such as heat leakages via the building envelope and the solar radiation etc.. Some system variables and parameters used in the following are listed in Table I.

A. Internal Thermal & air flow Dynamics

According to the energy balance [4], we have

$$mc_p \frac{dT_{in}}{dt} = \dot{Q}_t + \dot{Q}_g, \tag{1}$$

TABLE I
SOME VARIABLES USED IN THE MODELING PROCEDURE

Notation	Description	Unit
m	mass of the indoor air	kg
$\dot{m}$	air mass changing rate	$\frac{kg}{sec}$
c_p	heat transfer coeff.	
T_{in}	indoor temperature	degree
T_{out}	outdoor temperature	degree
q_{in}	air flow rate via inlet	m^3/s
q_{out}	air flow rate via outlet	m^3/s
C_d	inlet discharge coefficient	-
A	inlet opening area	m^2
ρ_{out}	outdoor air density	kg/m^3
ρ_{in}	indoor air density	kg/m^3
v_{wind}	outdoor wind speed	m/s
$T_{w,in}$	water temp. at pipe inlet	degree
$T_{w,out}$	water temp. at pipe outlet	degree
$\dot{m}_{water}$	water mass flow rate	$\frac{kg}{sec}$

where $\dot{Q}_t$ is the sum of the heat changing rate at which the heat transfers from the outside into the stable, and $\dot{Q}_g$ is the sum of the heat changing rate at which the heat is generated inside the stable, e.g., via animal behaviors or the heating system. These heat changing rates can be detailed as

$$\begin{aligned} \dot{Q}_t &= \dot{Q}_{inlet} + \dot{Q}_{outlet} + \dot{Q}_{leakage} + \dot{Q}_{solar}, \\ \dot{Q}_g &= \dot{Q}_{animal} + \dot{Q}_{heater}, \end{aligned} \tag{2}$$

where $\dot{Q}_\alpha$ is the heat changing rate between the stable air and the α component. The estimation of these functions are discussed in the following.

According to the mass balance [4], we have

$$\dot{m} = \dot{m}_{inlet} + \dot{m}_{outlet} + \dot{m}_{leakage}, \tag{3}$$

where $\dot{m}_\beta$ is the air mass changing rate between the stable and the β component. The estimation of these functions are discussed in the following.

B. Air Inlet Model

Due to the assumption of a single-zone concept, all physical inlets along one side of the wall can be modeled as one big virtual inlet, we name it *inlet-1*. Similarly, all inlets along the opposite wall can be modeled as another virtual inlet, we name it *inlet-2*. They have to be distinguished due to the fact that the outdoor wind may have different influence to these inlets' functions. Since the low-pressure ventilation principle is adopted in the considered stable, it means that the air flows through these inlets have only one direction, i.e., from the outside to the inside. Thereby, according to the Bernoulli's Equation [1], there is

$$q_{in} = C_d A \sqrt{\frac{2\triangle P_{inlet}}{\rho_{out}}}. \tag{4}$$

The differential pressure across the inlet - $\triangle P_{inlet}$ can be estimated by the sum of pressure differences induced by the wind condition, denoted as ($\triangle P_{wind}$), and the thermal buoyancy, denoted as ($\triangle P_{tb}$), i.e., $\triangle P_{inlet} = \triangle P_{wind} + \triangle P_{tb}$.

The pressure induced by the possible wind can be estimated by [1], [3]

$$P_{wind} = \frac{1}{2} C_p \rho_{out} v_{wind}^2, \tag{5}$$

where C_p is the pressure coefficient which can be determined empirically according to the wind direction. v_{wind} is the wind speed at the measure location. Then the pressure difference over an inlet (*inlet-1* or *inlet-2*) due to the possible wind can be estimated as

$$\begin{aligned} \triangle P_{wind} &= P_{wind} + (P_{out,ss} - P_{in,ss}) \\ &= \tfrac{1}{2} C_p \rho_{out} v_{wind}^2 + P_{out,ss} - P_{in,ss}, \end{aligned} \tag{6}$$

where $P_{out,ss}$ and $P_{in,ss}$ are the steady-state outdoor and indoor pressures, respectively.

The pressure difference due to thermal buoyancy can be estimated by [1], [3]

$$\triangle P_{tb} = P_{out} - P_{in} - (\rho_{out} - \rho_{in}) g H_{inlet},$$

where H_{inlet} is the equivalent height of the inlet center regarding to the reference pressure level. Based on the ideal gas equation, the air densities mentioned in above equation can be substituted by the measurable temperature information, then we have

$$\triangle P_{tb} = \triangle P_{out} - \triangle P_{in} + \rho_{out} g (H_{npl} - H_{inlet}) \frac{T_{in} - T_{out}}{T_{in}}, \tag{7}$$

where $\triangle P_{out}$ ($\triangle P_{in}$) is the deviation of the outdoor (indoor) pressure w.r.t. to its corresponding steady-state value. H_{npl} is defined as the neutral pressure level when the thermal dynamic inside the stable becomes steady-state, which can be calculated from the following relationship [9]:

$$P_{out,ss} - P_{in,ss} = \rho_{out} g H_{npl} \frac{T_{in,ss} - T_{out,ss}}{T_{in,ss}}.$$

Combining (6) and (7), we have

$$\begin{aligned} \triangle P_{inlet} &= \tfrac{1}{2} C_p \rho_{out} v_{wind}^2 + P_{out} - P_{in} \\ &+ \rho_{out} g (H_{npl} - H_{inlet}) \tfrac{T_{in} - T_{out}}{T_{in}}, \end{aligned} \tag{8}$$

The controllable input for this air inlet model (4) is the opening area A. This open area is determined by the position of the shutter which position is controlled by a winch motor. This controllable input has minmum- and maximum limitations, i.e., $0 < A < A_{max}$, which corresponds to the fully close or open position of the shutter.

C. Air Outlet Model

The air outlet is a kind of axial ventilator, which consists of a variable speed fan placed inside a chimney as shown in Fig.2. The controllable input of the outlet model is the fan's speed ω and the output is the air volumetric flow rate q_{out}.

Due to the assumption of a single-zone dynamic and the fact that all outlets are identical, all outlets are modeled as one big virtual outlet in the following.

For a given fan speed, the relationship between the pressure increment $\triangle P_{fan}$ over the fan and the air flow rate q_{out} can be described by a second-order polynomial, which is usually called a *fan curve* [1]. For instance, for a given fan speed ω_{ref}, the fan curve can be described as

$$\triangle P_{fan,ref} = a_{0,ref} + a_{1,ref} q_{out,ref} + a_{2,ref} q_{out,ref}, \quad (9)$$

where all coefficients $a_{i,ref}$ for $i = 0, 1, 2$ can be determined from experiment data through the curve fitting method or some other artificial intelligent methods.

Assume a fan curve for a specific fan speed, e.g., curve (9), is determined via experiments. Then, according to the infinity law [1], [8], the pressure increment over the fan when it runs at a speed ω can be estimated as:

$$\triangle P_{fan} = \frac{a_{0,ref}}{\omega_{ref}^2}\omega^2 + \frac{a_{1,ref}}{\omega_{ref}}\omega q_{out} + a_{2,ref} q_{out}^2, \quad (10)$$

The operating point of a fan in terms of the incremental pressure and the flow rate will be determined by the intersection between the fan curve at a specific speed and the *system curve* [1]. The system curve is used to model the relevant environment where the fan is interacted. In general, a system curve relating to a fan system can be modeled as

$$\triangle P_{sys} = (P_{out} - P_{in}) + K q_{out}^2, \quad (11)$$

where K is a coefficient relevant to the pressure loss due to the viscous friction. K can be estimated through measured incremental pressure and flow rate by setting up $\triangle P_{fan} = \triangle P_{sys}$, the output q_{out} can be determined by

$$\begin{aligned} q_{out} = & -\frac{\frac{a_{1,ref}\omega}{\omega_{ref}}}{2(a_{2,ref}-K)} \\ & + \frac{\sqrt{(\frac{a_{1,ref}\omega}{\omega_{ref}})^2 - 4(a_{2,ref}-K)(\frac{a_{0,ref}\omega^2}{\omega_{ref}^2} + P_{in} - P_{out})}}{2(a_{2,ref}-K)}. \end{aligned} \quad (12)$$

It can be observed that q_{out} has an algebraic relationship with fan's speed, subject to disturbance P_{in} and P_{out}. It should be noticed that the wind influence to the outlet is neglected here. If the wind influence needs to be considered, then (5) needs to be subtracted from (11). In addition, (12) also needs to be corrected correspondingly.

D. Animal Heat Model

In practice, the heat produced by inside animals varies according to their activity level during 24-hour day [8]. It can be approximated by a sinusoid function called (*dromedary model*) [8], i.e.,

$$\dot{Q}_{animal} = \dot{Q}_{free,tot}(1 + d_{free,tot} sin(2\pi f_a t - \varphi)), \quad (13)$$

where f_a is the frequency, φ is the phase shift. $\dot{Q}_{free,tot}$ is the total free heat generated by the animals. $d_{free,tot}$ is the percent-wise deviation from the heat generation. The total free heat can be estimated by the number of animals and animal species [8], [10].

E. Heating System Model

The stable heating system consists of a set of steel pipes as shown in Fig.2, called heat exchanger. Both the inlet and outlet water temperatures of the heat exchanger can be measured. The volumetric water flow rate can be estimated through the measurement from the water pump operation.

Assume that the temperature of the air surrounding the heat exchanger is constant, and the changes in fluid kinetic and fluid potential energy are negligible. The heat transferred from the exchanger to the stable can be estimated by [14]:

$$\dot{Q}_{heat} = \bar{U}_h A_{pipe} \triangle T_{lm}, \quad (14)$$

where A_{pipe} is the contacting area of the pipe line with the warm water. $\triangle T_{lm}$ is the average logarithmic temperature difference [14], i.e.,

$$\triangle T_{lm} = \frac{T_{w,in} - T_{w,out}}{ln(\frac{T_{in}-T_{w,out}}{T_{in}-T_{w,in}})}, \quad (15)$$

where $T_{w,in}$ and $T_{w,out}$ are warm water temperatures at the inlet and outlet, respectively. The overall average heat transfer coefficient $\bar{U}_h$ ($\frac{W}{m^2K}$) can be calculated by

$$\bar{U}_h = \frac{1}{\frac{1}{\bar{h}_{water}} + \frac{r_{water}}{k_{steel}} ln(\frac{r_{pipe}}{r_{water}}) + \frac{r_{water}}{r_{pipe}}\frac{1}{\bar{h}_{air}}}, \quad (16)$$

where r_{water} is the inner pipe radius, and r_{pipe} is the outer pipe radius. The parameters $\bar{h}_{water}$ and $\bar{h}_{air}$ are the average heat transfer coefficients of the water and surrounding air, respectively. k_{steel} is the pipe steel thermal conductivity.

By focusing the circulated warm water, the warm water temperature at the outlet of the exchanger can be described as a function of the water temperature at the inlet of the exchanger [14]i.e.,

$$T_{w,out} = T_{in} + (T_{w,in} - T_{in}) exp(-\frac{\bar{U}_h A_{pipe}}{\dot{m}_{water} c_p}) \quad (17)$$

This model is necessary if we want to carry out complete simulation study. The identification of system parameters will be discussed in the following section.

F. Entire System Model

As we mentioned at the beginning, the other thermal comfort criteria except the indoor temperature won't be considered at this stage. The heat loss due to the leakage, convection and the solar radiation etc are assumed to have a small contribution to affect the stable dynamic comparing with the influences from the inlets, outlets, and heat system. Thereby they are simply modeled as some random

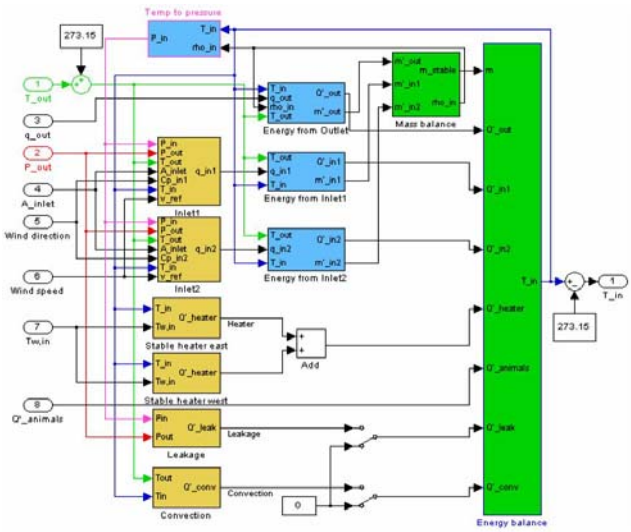

Fig. 3. The system block-diagram in Matlab/simulink

signals with relatively small amplitudes. Combining (4), (12), (14),(13) and (17), the entire system model can be obtained.

Define the system state X, output Y and input U as:

$$X = \begin{bmatrix} T_{in} \\ m \end{bmatrix}, \; Y = \begin{bmatrix} T_{in} \end{bmatrix}, \; U = \begin{bmatrix} A \\ q_{out} \\ T_{w,in} \end{bmatrix},$$

then the obtained system can be described as a nonlinear state space formulation as:

$$\begin{aligned} \dot{X} &= \begin{bmatrix} f_1(T_{in}, m, A, q_{out}, T_{w,in}, d, T_{out}) \\ f_2(T_{in}, m, A, q_{out}, d, T_{out}) \end{bmatrix}, \\ Y &= T_{in} \end{aligned} \tag{18}$$

where disturbance vector d represents all the uncontrollable inputs to the model, e.g., v_{wind}, $\dot{Q}_{animal}$ etc. An implemented Simulink/Matlab diagram is shown in Fig.3. It can be noticed that the inlets are classified into two groups. It is due to the fact that the wind induced pressure coefficient C_p in (5) is different for these two groups (sign difference). The heating system is also classified into two groups as well, this is due to the fact that these two groups physically locate oppositely and are configured differently.

The equilibrium point(s) of the concerned system can be calculated by putting $\dot{X}$ equal to zero in (18). By taking care of the reality and legislation limitations, finally we pick up a reasonable equilibrium point as $T_{in} = 20degree$, $T_{out} = 15degree$, $m = 36.9kg$, $q_{out} = 4.8m^3/s$, $A = 1.46m^2$, $T_{w,in} = 21degree$. This steady-state operating condition corresponds to an ideal climate for broilers between the age of 28-35 days. Based on this selected equilibrium point, accordingly a linearized model can be obtained. We refer to [10] for details.

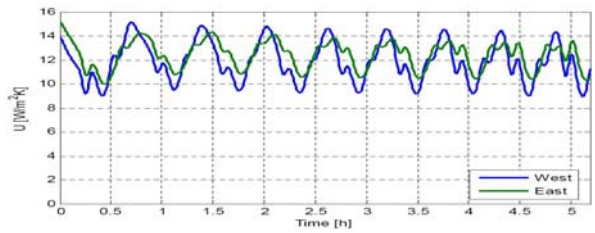

Fig. 4. Calculated $\bar{U}_h$ (for west and east parts) based on measurements and a specific operating condition

IV. PARAMETER IDENTIFICATION AND MODEL VALIDATION

A. Parameter Identification

The system parameters are estimated through experiments or determined according to some empirical rules. Hereby we just mention the identification of coefficient $\bar{U}_h$. We refer to [10] for more details. Since the water temperatures, water flow rate and the indoor temperature in the real system are measurable, thereby $\bar{U}_h$ can be determined through (19) under different operating conditions. A result under the operating condition: $A = 1.77m^2, q_{out} = 4m^3/s, T_{w,in} = 46\ degree, T_{w,an,in} = 55\ degree$, is shown in Fig.4. Average values from different tests are used as the final solution, e.g., $\bar{U}_{h,west} = 11.45W/M^2K$, and $\bar{U}_{h,east} = 12.09W/M^2K$ are used in our simulation model.

$$\bar{U}_h = -\frac{1}{A_s}\dot{m}_{water}c_p ln\left(\frac{T_{w,out} - T_{in}}{T_{w,in} - T_{in}}\right). \tag{19}$$

B. Model Validation

Since we picked up a simplest modeling strategy - single-zone model for a relatively large stable system, thereby a perfect matching between the model and real system is not expected. However, some key features of these two should exhibit clear consistence with each other.

The first test is to run the real system at the selected equilibrium point subject to real external disturbances. The comparison of test and simulation results is shown in Fig.5. This test was performed during kl.12:03-18:27, 26 May 2007 in the northern Denmark. The initial indoor temperature is 20.5 degree. It can be seen that the indoor temperature is always higher than the steady-state temperature at the equilibrium point (20 degree), that is due to the outside temperature being higher than its steady-state value (15 degree) as well. However, it can be noticed that the simulation system has the same tendencies as the real system in terms of rising time, mean steady-state indoor temperature. The simulation result is more affected by the outdoor temperature, this could be due to the fact that the stable is well isolated and thereby not affected much by direct sun or wind. This isolation plays a filtering effect which is not modeled in the developed model. Moreover, the capability of thermal energy

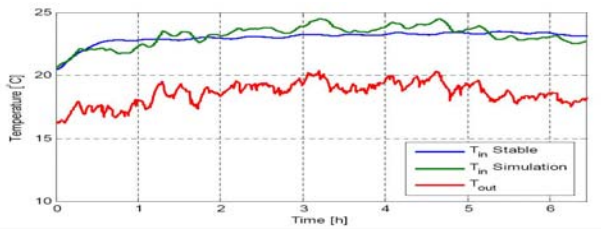

Fig. 5. Comparison of simulation and real test nearby the equilibrium point

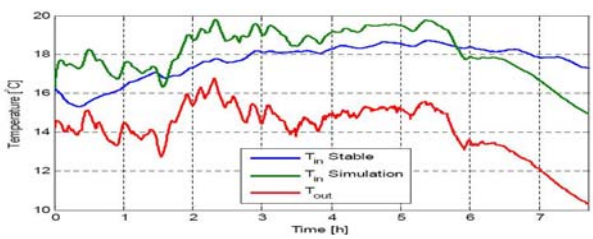

Fig. 6. Comparison of simulation and real test for dynamic ventilation

storing or releasing by the building materials is not modeled either [14].

Another test is carried out regarding the dynamic behaviors of the ventilation. This test is performed during kl.12.50-20.33, 7 May 2007 in Northern Denmark. The comparison of simulation and test results is illustrated in Fig.6. It can be seen that the simulation model has the similar tendency as the real system, however, it is more affected by the outdoor temperature. For other testings and detail discussions, we refer to [10].

C. Closed-loop Control System Using MPC

A Model Predictive Controller (MPC) with constraints is developed and implemented in [10], [15] based on the obtained model. One test result is shown in Fig.7. It can be noticed that the controller successfully kept the indoor temperature within a required range around the set-point. For the control issues we refer to [15] for more details.

V. CONCLUSION

Modeling of a real-sized livestock stable climate using the single-zone method is discussed. The thermal dynamic of the indoor climate is modeled based on the energy balance and the mass balance principle. The hybrid ventilation system, including the air inlets, outlets and their driving systems, and heating systems, are extensively studied and system parameters are identified through experiments. The model is further validated through comparison with real system. The obtained results show a clear feasibility to use a simple single-zone model for developing a sophisticated optimal control to handle large-sized climate control problem. Of course, for commercialization of a developed climate control system, some tradeoff should be considered between the expenses for implementation and the expected system performance.

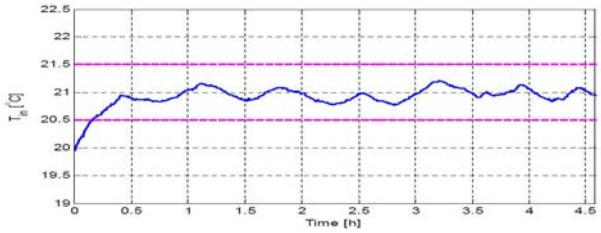

Fig. 7. Test result for MPC controlled climate with set-point of 21 degree

VI. ACKNOWLEDGMENTS

The authors would thank SKOV A/S for initiating the project and providing testing facilities and technical supports.

REFERENCES

[1] D. Etheridge and M. Sandberg, *Building ventilation theory and measurement*, John Wiley & Sons, 1996.

[2] M. Gwerder, B. Lehmann, J. Tdtli, V. Dorer and F. Renggli, Control of thermally-activated building systems, *Applied energy*, Vol.85, 2008, pp 565-581.

[3] P. Heiselberg, Natural and hybrid ventilation, *Lecture Notes*, Aalborg University, Denmark, 2004.

[4] F.P. Incropera, *Fundamentals of heat and mass transfer*, John Wiley & Sons, 2002.

[5] J.J. Jessen, H. Schiøler, J.F.D. Nielsen and M.R. Jensen, "COTS technologies for integrating development environment and remote monitoring and control of livestock stable climate", *in Proc. of Systems, Man and Cybernetics (SMC '06)*,2006, pp 3268-3273.

[6] Y. Li, P. Heiselberg, Analysis Methods for Natural and Hybrid Ventilation: a Critical Literature Review and Recent Developments, *International Journal of Ventilation*, Vol.1, hybrid ventilation special edition, pp 2-20.

[7] L. Ljung and T. Glad, *Modeling of dynamic systems*, Prentice-Hall, 2002.

[8] H. Poulsen and S. Pedersen, *Klimateknik, ventilation, isolering og opvarmning, 4. udgave*, Landbrugsforlaget, 2005.

[9] G. Schauberger, M. Piringer and E. Petz, Steady-state balance model to calculate the indoor climate of livestock buildings, demonstrated for finishing pigs, *International Journal of Biometeorology*, Vol.43, No.4, 2000, pp 154-162.

[10] Stefan K. Greisen, Jette R. Hansen and Niels A. Pedersen, Efficient and reliable indoor climate control for livestock stables, *Master Thesis*, Aalborg University, Esbjerg Campus, Denmark, 2007.

[11] S. Toropov, B. Reppo, A. Leola and V. Palge, Modelling of heat exchange of milking parlour, *Agronomy Research*, Vol.6 (Special issue), 2008, pp 397404.

[12] Z. Wu, P. Heiselberg, J. Stoustrup, "Modeling and control of livestock ventilation systems and indoor environments", *in Proc. of AIVC 26th conference*,2005, pp 335-340.

[13] Z. Wu, J. Stoustrup, K. Trangbaek and M.R. Jensen, "Model Predictive Control of the Hybrid Ventilation for Livestock", *in Proc. of 45th CDC*,2006, pp 1460-1465.

[14] Z. Yang, G. K. Pedersen, L. F.S. Larsen and H. Thybo, "Modeling and Control of Indoor Climate Using a Heat Pump Based Floor Heating System", *in Proc. of 33rd Annual Conference of the IEEE Industrial Electronics Society (IECON'07)*, 2007, pp 2985-2990.

[15] Z. Yang, S. K. Greisen, J. R. Hansen, N. A. Pedersen and M. R. Jensen, On the Optimal Climate Control of a Real-sized Livestock Stable System, under submission.