On the potential of OFDM enhancements as 5G waveforms

Berardinelli, Gilberto; Pajukoski, Kari; Lähetkangas, Eeva; Wichman, Risto; Tirkkonen, Olav; Mogensen, Preben

Published in:
Vehicular Technology Conference (VTC Spring), 2014 IEEE 79th

DOI (link to publication from Publisher):
10.1109/VTCSpring.2014.7023019

Publication date:
2014

Document Version
Early version, also known as pre-print

On the potential of OFDM enhancements as 5G waveforms

Gilberto Berardinelli (1), Kari Pajukoski (2), Eeva Lähetkangas (2), Risto Wichman (3), Olav Tirkkonen (3), Preben Mogensen (1, 4)

(1) Department of Electronic Systems, Aalborg University, Denmark
(2) Nokia Solutions and Networks, Oulu, Finland
(3) Department of Communication and Networking, Aalto University, Finland
(4) Nokia Solutions and Networks, Aalborg, Denmark

Abstract— **The ideal radio waveform for an upcoming 5th Generation (5G) radio access technology should cope with a set of requirements such as limited complexity, good time/frequency localization and simple extension to multi-antenna technologies. This paper discusses the suitability of Orthogonal Frequency Division Multiplexing (OFDM) and its recently proposed enhancements as 5G waveforms, mainly focusing on their capability to cope with our requirements. Significant focus is given to the novel zero-tail paradigm, which allows boosting the OFDM flexibility while circumventing demerits such as poor spectral containment and sensitivity to hardware impairments.**

I. INTRODUCTION

The exponential increase of the data traffic demand in the next years justifies the design of a novel 5th Generation (5G) radio access technology (RAT) aiming at 10 Gbps upper data rate and sub-ms latency [1]. A massive deployment of small cells with limited coverage is foreseen as the solution for coping with the high capacity demand. In order to deliver the promised data rates in such dense deployment, 5G will use a bandwidth of at least 200 MHz, and feature a number of advanced technology components such as multiple-input-multiple-output (MIMO) antenna techniques, interference rejection combining (IRC) receivers, inter-cell interference coordination (ICIC) and distributed link/rank coordination. It is further agreed that a 5G RAT will be a scheduled system as the current Long Term Evolution (LTE) and Long Term Evolution – Advanced (LTE-A) radio standards [2]. Furthermore, novel communication paradigms such as Device-to-Device (D2D) or Machine Type of Communication (MTC) are expected to be supported by 5G.

The selection of the radio waveform has a significant impact on the 5G RAT, since it affects the transceiver design and its complexity as well as the radio numerology. Ideally, the waveform to be used in a local area network aiming at Gpbs data rates should have the following properties:

- Limited computational complexity for the generation/detection. This would reasonably reduce the cost of the hardware chips, extending the usage of 5G to cheap devices for the aforementioned D2D and MTC paradigms.
- Limited time/frequency overhead. In particular, it would be beneficial if the overhead which is needed, for instance, to cope with the time dispersion of the multipath channel could be set dynamically rather than being hard-coded in the system numerology.
- Good localization in time. This allows reducing the latency at the receiver in the tracking process.
- Good spectral containment. It leads to an efficient usage of the spectrum by avoiding large guard bands between systems operating over neighbor frequency bands.
- Simple extension to MIMO. Adding the spatial dimension in the transceiver should not significantly increase the computational complexity for the signal detection.
- Robustness to hardware impairments such as carrier frequency offset. This is mainly meant to deal with low cost devices which may feature poor oscillators and radio-frequency front-ends.
- Support for frequency selective link and rank adaptation. Exploiting the frequency diversity of the radio channel across a large bandwidth by selectively adapting modulation and number of spatial streams allows indeed well-established benefits in terms of cell throughput [2].

Orthogonal Frequency Division Multiplexing (OFDM) and Filter Bank Multicarrier (FBMC) are considered as the most attractive candidates for a 5G waveform. A comparison between the two modulations has been carried out by several contributions in the recent literature (e.g.,[4][5]), with a common conclusion: nominally FBMC overcomes OFDM in terms of spectral containment and system overhead, but it is significantly more complex due to the usage of long prototype filters. Since we consider the limited computational complexity as a fundamental requirement for 5G, we believe OFDM is still the strongest candidate for a 5G waveform. This is also justified from the fact that OFDM can be easily manipulated to create different schemes that circumvent its inner limitations; the most known is the Discrete Fourier Transform – spread – OFDM (DFT-s-OFDM) scheme that significantly reduces its Peak-to-Average Power Ratio (PAPR) with substantial benefits in terms of power efficiency [6].

In this paper, we present a qualitative overview of the OFDM enhancements emerged in the recent literature, with the aim of emphasizing their benefits in overcoming the OFDM limitations and then been suitable candidates for 5G. Particular emphasis is given to the novel zero-tail DFT-s-OFDM concept, which boosts the OFDM flexibility while also improving its frequency localization.

The paper is structured as follows. General remarks on the comparison between FBMC and OFDM are given in Section III. Section IV presents some of the most significant enhancements of OFDM recently proposed for circumventing its limitations. Section V discusses further options for boosting the OFDM flexibility. Finally, Section VI resumes the conclusions.

II. OFDM VS. FBMC

OFDM and FBMC are well-known multicarrier techniques where the data symbols are transmitted simultaneously over multiple frequency subcarriers. Their nature of multicarrier signals offers in-build support for frequency selective link/rank adaptation, i.e. modulation and coding rate as well as the number of spatial data streams can be adapted to the estimated channel quality in a certain portion of the used bandwidth. The main difference between OFDM and FBMC is the pulse shaping applied at each subcarrier. OFDM uses the simple square window in the time domain, which results in a sinc shape in the frequency domain. The usage of the time square window allows a very efficient implementation based on the Inverse Fast Fourier Transform (IFFT) spreading of the original block of data symbols [2]. As a result of the IFFT processing, frequency subcarriers are orthogonal, i.e. they are spaced such that each peak is located in the same positions of the nulls of the neighbors. Such orthogonality can be kept through a time dispersive wireless channel by applying a Cyclic Prefix (CP) at the transmitter, obtained as a copy of the last part of the OFDM symbol itself. In this way, the signal is seen as cyclic at the receiver, and efficient one-tap per-subcarrier frequency domain equalization can be applied. The usage of a CP also allows to clearly localize the OFDM waveform at the receiver and to receive signals from multiple sources by using a single FFT at the receiver. The capability of OFDM of converting the fading channel in multiple flat channels allows straightforward extension to MIMO, since the spatial channel can be equalized subcarrier-wise. Nevertheless, the steep slope of the sinc pulse makes OFDM rather sensitive to hardware inaccuracies such as phase noise and frequency offset, which may significantly impact the link performance at high carrier frequencies. Moreover, the sinc pulse shows large power side lobes (up to -13 dB below the main lobe), resulting in large overall out-of-band (OOB) emissions, which can be only partly reduced by using a raised cosine windowing of the IFFT output. Therefore, it is necessary to employ a significant guard band to comply with a strict spectrum mask. However, it is worth to mention that the OOB emissions are not mutually affecting OFDM signals transmitted over adjacent bands in case they are time synchronized. This is because the peaks of their frequency subcarriers are located in the nulls of the side lobes of synchronous signals transmitted over the adjacent band. Significant impact is then only expected in case of time misaligned signals.

In FBMC, the pulse shaping at each subcarrier is designed in a way that some of the OFDM limitations can be circumvented. For instance, prototype functions with extremely concentrated frequency localization can be designed such that the OOB emissions become negligible [4]. The energy containment in the frequency domain also boosts the robustness towards inter-symbol interference, such that the insertion of the CP is not necessary. Further, phase noise and frequency offset are also not significantly affecting the performance. However, the usage of a long prototype filter and the absence of CP increase significantly the computational complexity, because one-tap equalization per subcarrier is not sufficient anymore. The absence of CP may also reduce the robustness to timing errors, and in general complicates the tracking phase. Furthermore, the good frequency localization is compromised when realistic radio-frequency impairments are taken into account; as shown in [7], the spectral regrowth of FBMC and OFDM is very similar when the power amplifier distorts the transmitted waveform. Moreover, the overhead benefit of FBMC tends to vanish when this modulation is applied in a scheduled system such as our envisioned 5G. Since FBMC symbols are well-localized in frequency, they are correspondingly dispersed in time, and the transmission of a frame consisting of FBMC symbols is subject to pre-cursors and post-cursors. These tails can be shortened to reduce the time dispersion but the length of the frame should still be half a symbol longer than with OFDM to limit the degradation in link performance [8]. Therefore, FBMC will increase system latency when compared to OFDM, because switching between uplink and downlink frames will require a longer guard period. Finally, the extension to the spatial dimension for MIMO transmission increases significantly the FBMC complexity.

Despite of its demerits, OFDM is then in our view the strongest candidate waveform for a 5G scheduled system. Moreover, as mentioned in the introduction OFDM can be easily manipulated to circumvent its limitations without adding significant complexity. The rest of the paper will be focused on the OFDM enhancements aiming at overcoming its main limitations while preserving its essential selling points.

III. OVERCOMING OFDM LIMITATIONS

The capability of OFDM modulation to cope with the fading channel in a cost-effective manner comes unfortunately at the expense of a number of demerits which may affect its usability in 5G. Besides the aforementioned poor frequency localization (with time misalignment) and sensitivity to the hardware impairments, the main recognized drawback of OFDM is its high PAPR due to the time domain superposition of sinusoidal signals with different phases. A large PAPR leads indeed to a large back-off at the input of the power amplifier, which results in lower power efficiency of the device. Discrete Fourier Transform – spread – OFDM (DFT-s-OFDM) has been proposed as a solution for converting the parallel data transmission in time to a serial transmission emulating a traditional single carrier system [6]. This leads to obvious benefits in terms of reduced PAPR. While efficient one-tap frequency domain equalization can still be applied, DFT-s-OFDM transmission over fading channels suffers from a noise enhancement, which can however can be significantly reduced by exploiting receive diversity [6]. While its extra complexity

with respect to OFDM is only given by an extra DFT/IDFT pair, its *quasi*-single carrier nature prohibits the usage of frequency selective algorithms. Note that the low PAPR property of DFT-s-OFDM is less critical in local area rather than in wide area due to the lower expected transmit power. Moreover, the recently proposed envelope tracking techniques [9] allow the power amplifier to operate very close to the saturation region by dynamically adapting the supply voltage to the input signal. Even though the aforementioned considerations reduce the necessity of a low PAPR modulation, the usage of DFT-s-OFDM can be still considered appealing since this modulation improves the robustness towards carrier frequency offset due to poor oscillators. This is a due to the spreading of each data symbol over the whole subcarrier set due to the DFT at the transmitter.

With time-misaligned signals, both OFDM and DFT-s-OFDM show poor performance in terms of spectral containment [10]. Several proposals have been presented in the literature with the aim of reducing the OOB emissions of OFDM without introducing inter-symbol interference. An approach based on the introduction of cancellation subcarriers has been proposed for instance in [11]. The values to be mapped on the cancellation subcarriers are computed by applying complex weighting factors to the information subcarriers. Such coefficients need to be computed for each OFDM symbol. The drawback of the online computation of the weighting coefficients is circumvented in [12]. However, besides the obvious overhead increase, the scheme in [12] requires the cancellation subcarriers to be distributed across the entire bandwidth by following a non-homogeneous pattern rather than being located at the edge of the band. This may severely impact the scheduling flexibility, since some of the frequency blocks (e.g., Physical Resource Blocks (PRBs) by following the LTE terminology) may contain a larger number of redundant subcarriers than others. Furthermore, the cancellation subcarriers are expected to consume higher power than the data subcarriers, with obvious penalty in terms signal-to-noise ratio (SNR) at the receiver. Recently, the reduction of OOB emissions of OFDM has also been tackled by the N-continuous OFDM paradigm [13]. Such novel scheme relies on the empirical observation that the trivial square window of the OFDM time domain filter leads to an abrupt transition between adjacent OFDM symbols. In its original formulation, N-continuous OFDM precodes the OFDM subcarriers such that the derivatives up to the N-order of the tail and the head of the time domain symbols are made continuous. However, such scheme introduces memory between adjacent symbols and then requires an iterative receiver for the decoding. The necessity of using an iterative receiver is circumvented in [14], where the requirement of N-order continuity is set to the origin, i.e. the tail and the head of each OFDM symbol are continuous in the origin. An OOB emission reduction of namely 30 dB is obtained, but the precoder introduces correlation in the data symbol vectors, which leads to significantly worse link performance. In general, circumventing the OFDM limitations leads to degradation in terms of link performance in case linear receivers are used.

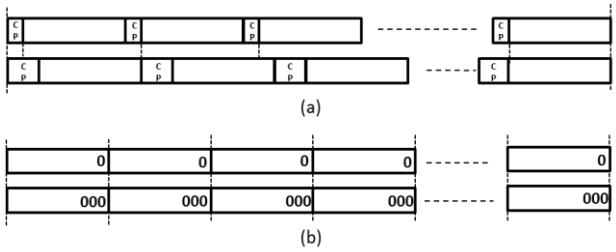

Figure 1. CP-based signals (a) vs. zero-tail signals (b).

IV. BOOSTING OFDM FLEXIBILITY

In the previous section we have presented some enhancements of baseline OFDM aiming at overcoming its general limitations for a generic system. Here, we focus on a further limitation of OFDM which arises when dealing with scheduled systems such as LTE as well as our envisioned 5G: the usage of an hard-coded CP, which has to fit with a predefined frame duration while preserving its inter-symbol interference suppression properties. For instance, in LTE two different subframe structures have been defined: short CP of 4.7 µs with 14 time symbols and long CP of 16.7 µs with 12 time symbols, both fitting the constraint of 1 ms subframe duration [2]. The adoption of an hard-coded CP leads to obvious spectral efficiency losses in case the system is operating over a channel having a significantly lower delay spread than the CP duration. Conversely, the link performance can be affected in case of transmission over a channel with larger delay spread. Furthermore, hard-coding the CP duration may create coexistence problems between neighbor systems using different CP settings, since they would inevitably generate mutual asynchronous interference (see Figure 1.a) which may prevent them to operate in close proximity.

Let us consider instead a system where no CP is used, but the OFDM symbols have a number of zeros in their tail whose length can be set to accommodate the time dispersion of the multipath channel. Let us assume that such zero-tail can be obtained as a natural output of the IFFT, thus preserving the subcarrier orthogonality at the transmitter. The usage of the zero-tail has then two main advantages with respect to an hard-coded CP: it allows to dynamically adapt the overhead which is needed to cope with the multipath channel with the estimated fading profile, and it enables the possibility of achieving time alignment among systems operating over channels with different dispersion characteristics, as shown in Figure 1.b. For instance, an indoor 5G cell can be set to operate in proximity with an outdoor 5G cell, and the two cells can coordinate their transmissions such as mutual interference is not generated. The usage of zero-tail signals allows then decoupling the radio numerology from the expected channel characteristics, with coexistence benefits.

In the following, different options for the generation of the zero-tail signals are presented.

A. Unique word OFDM

As mentioned above, in order to preserve the subcarrier orthogonality at the transmitter, the zero-tail OFDM signal has to be generated as a natural IFFT output without applying any

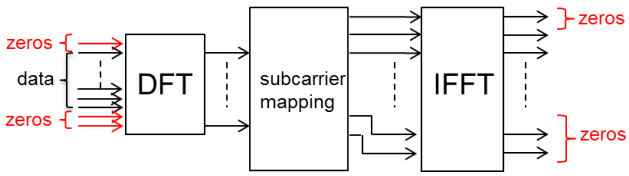

Figure 2. Zero-tail DFT-s-OFDM signal generation

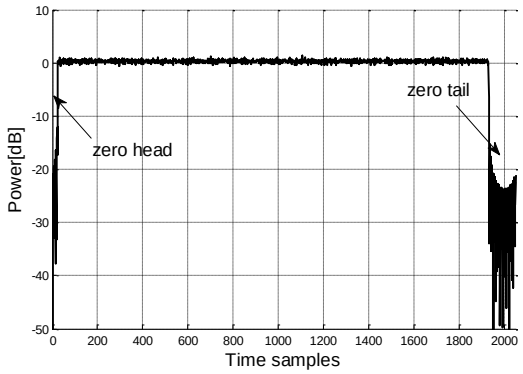

Figure 3. Shapshot of a zero-tail DFT-s-OFDM signal

signal distortion in the time domain. The literature on the Unique word OFDM (e.g., [15]) provides a framework for zero-tail signal generation. The main idea of Unique word OFDM is to generate a signal having null power in a portion of its time domain samples, to be then replaced by ad hoc sequences (e.g., reference sequences for channel estimation). The same principle can be then used for the generation of the zero portion only. Such zero-tail is generated by precoding a set of redundant subcarriers. Besides the additional complexity due to the precoding, the Unique word OFDM requires the redundant subcarriers to be distributed across the entire bandwidth by following a pseudo-random pattern. Similarly to the cancellation subcarriers technique for OOB emission reduction mentioned in Section III, this may severely impact the scheduling flexibility.

B. Zero-tail DFT-s-OFDM

A zero-tail signal can also be generated as a modified form of the original DFT-s-OFDM transmitter, as shown in Figure 2. It is known that in DFT-s-OFDM the time domain signal corresponds to a filtered version of the original vector of data symbols [16]; this means, by replacing the last part of the DFT input with a zero-vector with tunable length, such zeros are spread at the tail of the resultant time domain signal, as shown in Figure 3. The resultant tail has no zero-power due to the leakage of the data part on the tail, but considerably lower power than the average (e.g., 25 dB lower). Note that a limited number of zeros also needs to be set at the head of the signal to avoid power regrowth at the tail due to the cyclicity of the IFFT. While the zero-tail duration has to be set according to the environment characteristics (e.g., delay spread), the zero head represents a pure system overhead. In [17] we have shown that the zero-head can be set to be extremely short (e.g, 2 subcarriers out of 1200) without affecting the link performance. We have also shown that zero-tail DFT-s-OFDM has similar link performance of the traditional DFT-s-

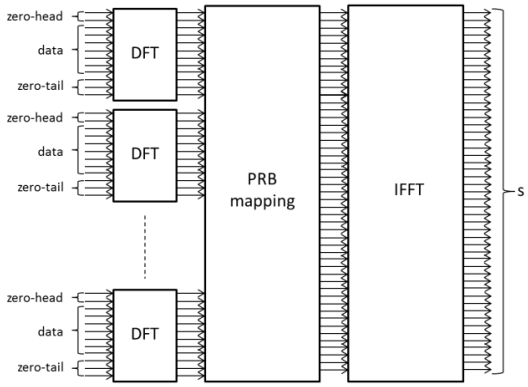

Figure 4. PRB-specific zero-tail DFT-s-OFDM signal generation

OFDM. Surprisingly, zero-tail DFT-s-OFDM has also the advantage of a much better spectral containment, due to the usage of both a low power head and a low power tail which allows to smoothen the transition between adjacent time symbols. A similar reduction of N-continuous OFDM can be achieved, while keeping the aforementioned flexibility advantages. Since the pre-DFT insertion of zeros is a trivial operation, the complexity of zero-tail DFT-s-OFDM is the same of a traditional DFT-s-OFDM transceiver. Further, zero-tail DFT-s-OFDM preserves the same benefits of traditional DFT-s-OFDM in terms of robustness to hardware inaccuracies. The main limitation is again the impossibility of accessing the frequency domain for frequency selective link and rank adaptation. For further details on zero-tail DFT-s-OFDM we recall to [17].

C. PRB-specific zero-tail DFT-s-OFDM

The support for frequency selective operations is a fundamental requirement for our 5G waveform, which is however not accomplished by the baseline zero-tail DFT-s-OFDM due to the DFT spreading operation of the data symbols across the entire bandwidth. However, the scheme presented above can be easily converted to a solution which supports frequency selective operations by simply applying the DFT spreading on a physical resource block (PRB) basis rather than over the entire bandwidth, as shown in Figure 4. A zero-head and a zero-tail vector should be applied at each PRB; note that this does not necessary imply an extra overhead since the length of the input zero vectors has to be downscaled to the PRB size. The properties in terms of flexible overhead are kept provided the zero-tail is set for each PRB according to the estimated delay spread. The low OOB emission property is also preserved.

A summary of the properties of the most significant discussed waveforms is given in Table 1. Namely, PRB-specific zero-tail DFT-s OFDM fulfills the whole set of requirements defined in the introduction. An extensive evaluation of its Error Vector Magnitude (EVM) properties when non-idealities are included needs to be carried out to fully establish its potential as 5G waveform.

TABLE I. OVERVIEW OF THE WAVEFORM CHARACTERISTICS

	OFDM	**DFT-s-OFDM**	**FBMC**	**Zero-tail DFT-s-OFDM**	**PRB-specific zero-tail DFT-s-OFDM**
Complexity	Low, given one-tap equalization	Low, given one-tap equalization	High, do the syntesis/analysis filters	Low, given one-tap equalization	Low, given one-tap equalization
Overhead	Given by hard-coded CP	Given by hard-coded CP	No necessity of CP	Dynamically set accordingly to the estimated delay spread	Dynamically set accordingly to the estimated delay spread
Frequency Localization	Poor (asynchronous) Good (synchronous)	Poor (asynchronous) Good (synchronous)	Excellent with ideal power amplifier	Very good with ideal power amplifiers	Very good with ideal power amplifiers
Time Localization	Good due to the presence of the CP	Good due to the presence of the CP	Poor	Good due to the presence of the zero-tail	Good due to the presence of the zero-tail
MIMO Support	Straightforward	Straightforward	Not straightforward	Straightforward	Straightforward
Robustness to carrier frequency offset	Poor	Better than OFDM due to the data symbols spread across the whole bandwidth	Very good, due to the usage of ad-hoc prototype filters	Better than OFDM due to the data symbols spread across the whole bandwidth	Better than OFDM due to the data symbols spread across the PRB
Support for frequency selective link/rank adaptation	Supported given the inner frequency granularity	Not supported	Supported given the inner frequency granularity	Not supported	Supported given the granularity at PRB level

V. CONCLUSIONS

This paper discussed the potential solutions for a 5G RAT waveform, mainly focusing on OFDM and its enhancements. Several schemes recently emerged in the literature are discussed according to a set of identified requirements. The nominal advantages of FBMC over OFDM in terms of spectral containment and overhead tend to vanish in a scheduled system and when realistic impairments are considered.

The low PAPR obtained by DFT-s-OFDM is not expected to be a significant advantage in local area. However, the robustness of DFT-s-OFDM to the carrier frequency offset is attractive for a system which is also envisioned to support low cost devices (e.g., for MTC). Known OFDM demerits such as large out-of-band emissions can be circumvented by techniques like N-continuous OFDM, at the expense of an increase in computational complexity. The zero-tail DFT-s-OFDM and its PRB-specific variant boost the waveform flexibility by adapting its overhead to the estimated delay spread of the channel, while also improving the spectral containment and the robustness to the hardware impairments. Addressing their effective potential as 5G waveforms is object of our future research.

REFERENCES

[1] P. Mogensen et al., "5G small cell optimized radio design", accepted in the International workshop on Emerging Technologies for LTE-Advanced and Beyond 4G, in conjunction with IEEE Globecom 2013.

[2] H. Holma, A. Toskala, "LTE for UMTS: OFDMA and SC-FDMA Based Radio Access". Wiley, 2009.

[3] L. Hanzo, et al. M. Munster, B. Choi, and T. Keller, OFDM and MC-CDMA for Broadband MultiUser Communications, WLANs and Broadcasting. John Wiley - IEEE Press, 2003.

[4] B. Farhang-Boroujeny, "OFDM Versus Filter Bank Multicarrier", IEEE Signal Processing Magazine, vol. 8, no. 3, May 2011.

[5] F.Schaich, "Filterbank Based Multi Carrier Transmission – Evolving OFDM- FBMC in the context of WiMax", European Wireless Conference, pp. 1051-1058, April 2010.

[6] B. E. Priyanto et al. "Initial performance evaluation of DFT-spread OFDM based SC-FDMA for UTRA LTE Uplink,", VTC Spring 2007, April 2007.

[7] T. Ihalainen et al. "Channel Equalization in Filter Bank Based Multicarrier Modulation for Wireless Communications," EURASIP Journal on Advances in Signal Processing, 2007.

[8] M. Bellanger, "Efficiency of filter bank multicarrier techniques in bursty radio transmission", IEEE Globecom 2010, pp. 1-4, December 2010.

[9] Nujira, "High accuracy envelope tracking for LTE' smartphones and modems," www.nujira.com/pages/files/Coolteq.L Feb 2013.pdf, 2013.

[10] B. E. Priyanto, "Air interface of Beyond 3G systems Air Interfaces of Beyond 3G systems with User Equipment Hardware Imperfections: Performance & Requirements Aspects - A case study on UTRA Long Term Evolution Uplink", PhD dissertation, Aalborg University, 2008.

[11] S. Brandes, I. Cosovic, and M. Schnell, "Sidelobe suppression in OFDM systems by insertion of cancellation carriers," VTC-Fall. 2005, September 2005.

[12] J. F. Schmidt, S. Costa-Sanz, R. Lopez-Valcarce, "Choose Your Subcarriers Wisely: Active Interference Cancellation for Cognitive OFDM", accepted in IEEE Journal on Selected Topics in Circuits and Systems, 2013.

[13] J. van de Beek and F. Berggren, "*N*-continuous OFDM," *IEEE Communications Letters.*, vol. 13, no. 1, pp. 1–3, Jan. 2009.

[14] J. van de Beek and F. Berggren, "EVM-constrained OFDM precoding for reduction of out-of-band emission," VTC Fall 2009, September 2009.

[15] M. Huemer, C. Hofbauer, and J. B. Huber, "The Potential of Unique Words in OFDM," Proceedings International OFDM Workshop (in-OWo), 2010.

[16] G. Berardinelli, "Air interface for next generation mobile communications networks: Physical Layer Design". Ph.D. dissertation, Aalborg University, 2010.

[17] G. Berardinelli, F. M. L. Tavares, T. B. Sørensen, P. Mogensen, and K. Pajukoski, "Zero-tail DFT-spread-OFDM signals", accepted in the 9th IEEE Broadband Wireless Access Workshop, in conjunction with Globecom 2013.