Papers, Volume 1 1962-1985

Thoft-Christensen, Palle

Publication date:
2006

Document Version
Publisher's PDF, also known as Version of record

CHAPTER 19

OPTIMIZATION AND RELIABILITY OF STRUCTURAL SYSTEMS[1]

P. Thoft-Christensen & J.D. Sørensen, Aalborg University, Denmark

1. INTRODUCTION

During the last 25 years structural optimization and structural reliability have grown from being pure research areas to mature research and engineering fields. One main difference between the two areas is that right from the beginning structural optimization theory has been a theory treat- ing the structure from a system point of view, whereas structural reliability theory for many years was primarily an element theory. However, during the last 10 years a number of ways to treat structural systems has been developed. Therefore, it is now possible to combine structural optimization and structural systems reliability in an appropriate way.

In the *classical deterministic structural optimization* for trussed and framed structures all variables (dimensions, loads, strengths, etc.) are assumed to be deterministic and the *design variables* are usually the cross-sectional areas A_i, $i = 1,..., k$ where k is the number of elements in the structure. Each structural element is characterized by only one number. This is fully satisfactory for trussed structures where only tensile/compressive forces exist. However, when bending occurs in the structural member, the plastic section moduli W_i, $i = 1,...,k$ and the second moments of area I_i, $i = 1,..., k$ are significant. To maintain the great advantage of having only one design variable for each structural member it is often assumed that

$$W_i = k_1 A_i^{3/2} \text{ and } I_i = k_2 A_i^2$$

where k_1 and k_2 are constants. This assumption will be used in this paper.

With regard to the *objective funtion* a natural choice is the total cost of the structure, not only the cost of structural material used, but also joints, fabrication, transportation, maintenance, etc. It is often assumed that, with a satisfactory degree of accuracy, the cost of a structure is proportional to the weight of the structure. For

[1] Presented at the NATO Advanced Study Institute on Computational Programming, Bad Windsheim, FRG, July 21 to August 2, 1984.

structures where only one material (steel, concrete, etc.) is used the weight is proportional to

$$W(\bar{A}) = \sum_{i=1}^{k} l_i A_i = \bar{l}^T \bar{A} \tag{1}$$

where l_i is the deterministic length of structural member i and where $\bar{l}^T = (l_1,...,l_k)^T$ and $\bar{A} = (A_1,...,A_k)$. The objective funktion (1) is used in this paper. It has the advantage of being linear in the cross-sectional areas.

The *constraints* signify that the stresses should everywhere be smaller than some prescribed values and likewise that the displacements should be smaller than some prescribed values. Further that all cross-sectional areas are greater than or equal to zero. The stresses and the displacements will for redundant structures depend on the cross-sectional areas. Therefore, the constraints can be written

$$g_j(\bar{A}) \geq 0 \quad , \quad j = 1,...,m \tag{2}$$

$$A_i \geq 0 \quad , \quad i = 1,...,n \tag{3}$$

where g_j, $j = 1,...,m$ are (non-linear) functions. The classical optimization problem can then be formulated in the following simple way. Determine the cross-sectional areas $\bar{A}$, so that $W(\bar{A})$ is minimum under the constraints (2) and (3). A number of methods to solve this problem exist and computer programmes have been developed (see e.g. Templeman [1]). Although practicable software for optimum design is still not commercially available it is fair to state that the classical structural optimization problem is well understood.

Modern design theory is based on a probabilistic point of view where variables as loads and strengths are considered stochastic variables. In this case at least two different structural optimization problems can be formulated.

The first one is concerned with *element reliability* where the constraints (2) are replaced by

$$\beta_i(\bar{A}) - \beta_i^0 \geq 0 \quad , \quad i = 1,...,n \tag{4}$$

where β_i is some measure of the reliability of the *critical failure element i*, and β_i^0 is the corresponding target value. *n* is the number of critical failure elements to be defined in section 2. Usually *n* is smaller than *m*, so the number of constraints are reduced. However, from a computational point of view β_i is more complicated than g_i.

The second optimization problem is related to *system reliability* and is of much more interest. In this case the constraints (2) are replaced by only one constraint, namely

$$\beta_S(\bar{A}) - \beta_S^0 \geq 0 \tag{5}$$

where β_S is a measure of the system reliability and β_S^0 the corresponding target value. In some situaions it might be useful to combine the constraints (4) and (5). The number of constraints are reduced drastically when (5) is used instead of (2). So, in this sense, the optimization problem is simpler. However, calculation of the system reliability index β_S is now a major problem.

In section 2 concepts like critical failure elements, critical failure modes, element reliability and system reliability will be defined. Evaluation of the system reliability will be treated in section 3, where the so-called β-unzipping method will be

introduced. The optimization procedure suggested in this paper is explained in section 4, and it is used on a number of examples in section 5.

2. DEFINITIONS OF STRUCTURAL FAILURE

In this section a brief description of the safety and reliability concept in relation to structures is given. A detailed presentation is given by Thoft-Christensen & Baker [2]. For a single element consider the fundamental case with only two basic variables, namely a load variable S and a strength variable R. S and R are stochastic variables given by their distribution functions F_S and F_R or alternatively by their density functions f_S and f_R (see figure 1). In this case failure occurs when $r - s = 0$. The function $f(r, s) = r - s$ is called the failure function and the stochastic variable $M = R - S$ is the safety margin. Then the probability of failure is

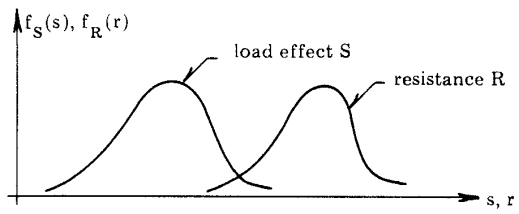

Figure 1.

$$P_f = P(R - S \le 0) = \int_{-\infty}^{\infty} F_R(x) f_S(x) dx \tag{6}$$

The reliability is by definition $R = 1 - P_f$.

In the more general case the reliability of a single element is determined by a number of basic variables (geometrical quantities, material strength, loads, etc.). For a given structure each variable x_i, $i = 1,2,...,q$ is considered a realization of a random variable X_i, i = 1, 2,..., q. The set of basic variables $\bar{X} = (X_1,...,X_q)$ is chosen in such a way that a failure function $f_1(\bar{x}) = f_1(x_1,...,x_q)$ can be defined. This failure function divides the q-dimensional basic variable space ω into two regions, namely a safe region ω_s, where $f_1(\bar{x}) > 0$, and a failure region ω_f, where $f_1(\bar{x}) \le 0$. The stochastic variable $M = f_1(\bar{X})$ is called the safety margin.

In general the basic variables $\bar{X} = (X_1,...,X_q)$ are correlated. However, by a linear transformation a set of uncorrelated basic variables $\bar{Y} = (Y_1,...,Y_q)$ can be obtained. The basic variable $\bar{Y}$ is then normalized so that a set of uncorrelated basic variables $\bar{Z} = (Z_1,...,Z_q)$, where the expected value $E[Z_i] = 0$ and the variance $\mathrm{Var}[Z_i] = 1$, $i = 1, \ldots, q$ are obtained. By these transformations the failure surface given by $f_1(\bar{x}) = 0$ in the x-space is transformed into a failure surface $\partial\omega$ given by $f(\bar{z}) = 0$ in the corresponding z-space. In the q-dimensional z-space the reliability index β is defined as the shortest distance from the origin to the failure surface, i.e.

$$\beta = \min_{\bar{z} \in \partial\omega} \left(\sum_{i=1}^{q} z_i^2\right)^{1/2} \tag{7}$$

Calculation of β can be undertaken in a number of different ways. Due to the fact that the failure surface is non-linear an iterative method must be used (see e.g. Thoft-Christensen & Baker [2] or Thoft-Christensen [3]).

Only one single element with a single failure function (failure mode) is treated above. It is much more complicated to evaluate the reliability of a real structure, since failure of a single element does not always imply failure of the complete structure due

to redundancy. In such a case it is useful to consider the structure from a system point of view.

Let a structure consist of n failure elements, i.e. elements or points (cross-sections) where failure can take place, and let the reliability index for failure element i be β_i. An estimate of the structural system reliability is obtained by taking into account the possibility of failure of any failure element by modelling the structural system as a series system with the failure elements as elements. The probability of failure for this series system is then estimated on the basis of the reliability indices β_i, i = 1, 2,..., n, and the correlation between the safety margins for the failure elements. This reliability analysis is called *system reliability analysis at level* 1. In general it is only necessary to include some of the failure elements in the series system (namely those with the smallest β-indices) to get a good estimate of the system failure probability. The failure elements included in the reliability analysis are called *critical failure elements.*

The modelling of the system at level 1 is natural for a statically determinate structure, but failure in a single failure element in a structural system will not always result in failure of the total system, because the remaining elements may be able to sustain the external loads due to redistribution of the load effects. This situation is characteristic of statically indeterminate structures. For such structures *system reliability analysis at level* 2 or higher levels may be reasonable. At level 2 the system reliability is estimated on the basis of a series system, where the elements are parallel systems each with two failure elements - so-called *critical pairs of failure elements.* These critical pairs of failure elements are obtained by modifying the structure by assuming in turn failure in the critical failure elements and adding fictitious loads corresponding to the load-carrying capacity of the elements in failure.

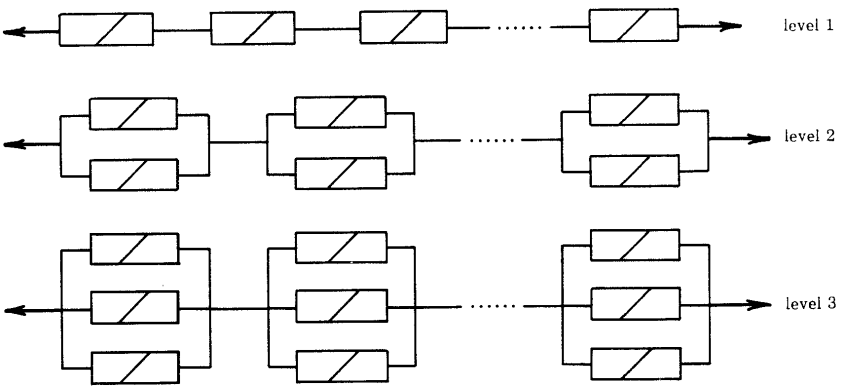

Figure 2. System modelling at levels 1, 2, and 3.

The procedure sketched above is now continued by analysing modified structures where failure is assumed in critical pairs of failure elements. In this way *critical triples of failure elements are identified and a reliability analysis at level* 3 can be made on the basis of a series system, where the elements are parallel

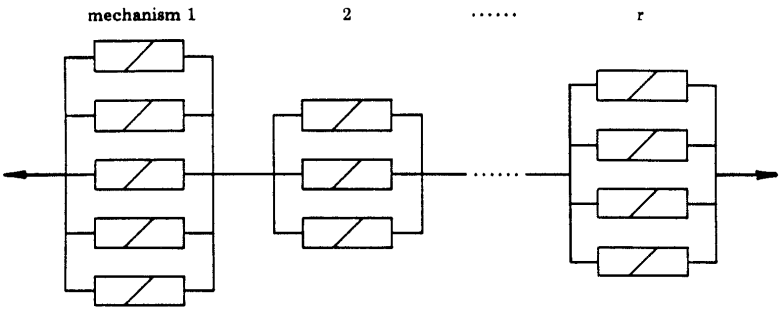

Figure 3. System modelling at mechanism level.

systems each with three failure elements. By continuing in the same way reliability estimates at level 4, 5, etc. can be performed, but in general analysis beyond level 3 is of minor interest. System modelling at levels 1, 2, and 3 is shown in figure 2.

The behaviour of some structures is elastic-plastic. In such cases failure of the structure is usually defined as formation of a mechanism. The probability of failure of the structural system is then estimated by modelling the structural system as a series system with the (significant) mechanisms as elements (see figure 3). Reliability analysis based on the mechanism failure definition is called *system reliability analysis at mechanism level.*

Consider a *critical failure element* with the failure function $f(\bar{z})$. If it is assumed that $\bar{X}$ is normally distributed the probability of failure is

$$P_f = P(f(\bar{z}) \le 0) = \int_{\omega_f} \varphi_n(\bar{z}) d\bar{z} \tag{8}$$

where φ_n is the standardized *n*-dimensional normal density function.

If the function *f* is linearized in the so-called design point with distance β to the origin of the coordinate system, then an approximate value for P_f is given by

$$\begin{aligned} P_f &\approx P(\alpha_1 Z_1 + ... + \alpha_n Z_n + \beta \le 0) \\ &= P(\alpha_1 Z_1 + ... + \alpha_n Z_n \le -\beta) = \Phi(-\beta) \end{aligned} \tag{9}$$

where $\bar{\alpha} = (\alpha_1, ..., \alpha_n)$ is the directional cosinus of the linearized failure surface. β is the reliability index. Φ is the standardized normal distribution function.

Next consider a *series system* with *k* elements. An estimate of the failure probability P_f^s of this series system can be obtained on the basis of linearized safety margins for the *k* elements.

$$\begin{aligned} P_f^s &= P\left(\bigcup_{i=1}^{k} (\bar{\alpha}_i Z_i + \beta_i) \le 0)\right) = P\left(\bigcup_{i=1}^{k} (\bar{\alpha}_i Z_i \le -\beta_i)\right) \\ &1 - P\left(\bigcup_{i=1}^{k} (\bar{\alpha}_i Z_i > -\beta_i)\right) = 1 - P\left(\bigcap_{i=1}^{k} -(\bar{\alpha}_i Z_i < \beta_i)\right) 1 - \Phi_k(\bar{\beta}; \bar{\bar{\rho}}) \end{aligned} \tag{10}$$

where $\bar{\alpha}_i$ and β_i are the directional cosinus and the reliability index for failure element *i*, *i* = 1,... ,*k* and where $\bar{\beta} = (\beta_1, ..., \beta_k)$. $\{\rho_{ij}\}$ is the carrelation coefficient matrix given by $\rho_{ij} = \bar{\alpha}_i^T \bar{\alpha}_j$ for all $i \ne j$. Φ_k is the standardized *k*-dimensional normal distribution function.

For a *parallel system* with k elements an estimate of the failure probability P_f^p can be obtained in the following way

$$P_f^p = P\left(\bigcap_{i=1}^{k} (\bar{\alpha}_i \bar{Z} + \beta_i \le 0)\right) = P\left(\bigcap_{i=1}^{k} (\bar{\alpha}_i \bar{Z} \le -\beta_i)\right) = \Phi_k(\bar{\beta}; \bar{\bar{\rho}}) \tag{11}$$

where the same notation as above is used.

One serious problem in connection with application of equations (10) and (11) is numerical calculation of the *k*-dimensional normal distribution function Φ_k for $k \ge 3$. However, a more serious problem is how to identify the failure modes (parallel systems) in figures 2 and 3. The last-mentioned problem is treated in the next section.

3. IDENTIFICATION OF CRITICAL FAILURE MODES

A number of different methods to identify critical failure modes have been suggested in the literature. In this paper the β-unzipping method [4]-[8] is used. Only the main features of the β-unzipping method are presented here. A very detailed description is given in Thoft-Christensen [6].

At *level 1* the system reliability is defined as the reliability of a series system with e.g. *n* elements - the *n* critical failure elements. Therefore, the first step is to calculate β-values for all failure elements and then use equation (10). As mentioned earlier, equation (10) cannot be used directly. However, excellent upper and lower bounds and good approximations exist. One way of selecting the critical failure elements is to select the failure elements with β-values in the interval $[\beta_{\min}, \beta_{\min} + \Delta\beta_1]$, where $\beta_{\min}$ is the smallest reliability index and where $\Delta\beta_1$ is a prescribed positive number.

At *level* 2 the system reliability is estimated as the reliability of a series system where the elements are parallel systems each with 2 failure elements (see figure 2) - so-called *critical pairs of failure elements.* Let the structure be modelled by *n* failure elements. Let the critical failure element *l* have the lowest reliability index β of all critical failure elements. Failure is then assumed in failure element *l* and the structure is modified by removing the corresponding failure element and adding a pair of so-called fictitious loads F_l. If the removed failure element is brittle, then no fictitious loads are added. However, if the removed failure element *l* is ductile then the fictitious load F_l is a stochastic load given by $F_l = \gamma_l R_l$ where R_l is the load-carrying capacity of failure element *l* and where $0 < \gamma_l \leq 1$.

The modified structure with the external loads and the fictitious load F_l are then reanalysed and new reliability indices are calculated for all failure elements (except the one where failure is assumed) and the smallest β-value is called $\beta_{\min}$. The failure elements with β-values in the interval $[\beta_{\min}, \beta_{\min} + \Delta\beta_2]$, where $\Delta\beta_2$ is a prescribed positive number, are then in turn combined with failure element *l* to form a number of parallel systems. Consider a parallel system with failure elements *l* and *r*. During the reliability analysis at level 1 the safety margin and the reliability index β_l for element *l* were determined. By the reanalysis of the structure the safety margin and the reliability index β_r are determined. From the corresponding safety margins the correlation coefficient can easily be calculated. Then it follows from (11) that the probability of failure of this parallel system is

$$P_f = \Phi_2(-\beta_l, -\beta_r; \rho) \tag{12}$$

The same procedure is then in turn used for all critical failure elements and further critical pairs of failure elements are identified. In this way the total series system used in the reliability analysis at level 2 is determined (see figure 2). The next step is then to estimate the probability of failure for each critical pair of failure elements (see (12)) and also to determine a safety margin for each critical pair of failure elements. When this is done generalized reliability indices for all parallel systems in figure 2 and correlation coefficients between any pair of parallel system are calculated. Finally, the probability of failure for the series system (figure 2) is estimated. The so-

called equivalent linear safety margin introduced by Gollwitzer & Rackwitz [9] is used as approximations for safety margins for the parallel systems.

The method presented above can easily be generalized to higher levels $N > 2$. At *level* 3 the estimate of the system reliability is based on so-called *critical triples of failure elements,* i.e. a set of three failure elements. The critical triples of failure elements are identified by the β-unzipping method and each triple forms a parallel system with three failure elements. These parallel systems are then elements in a series system (see figure 2). Finally, the estimate of the reliability of the structural system at level 3 is defined as the reliability of this series system.

Assume that the critical pair of failure elements (l, m) has the lowest reliability index $\beta_{l,m}$ of all critical pairs of failure elements. Failure is then assumed in the failure elements l and m adding for each of them a pair of fictitious loads F_l and F_m .

The modified structure with the external loads and the fictitious loads F_l and F_m are then reanalysed and new reliability indices are calculated for all failure elements (except l and m) and the smallest β-value is called $\beta_{\min}$. These failure elements with β-values in the interval $[\beta_{\min}, \beta_{\min} + \Delta\beta_3]$, where $\Delta\beta_3$ is a prescribed positive number, are then in turn combined with failure elements l and m to form a number of parallel systems.

The next step is then to evaluate the failure probability for each of the critical triple of failure elements. Consider the parallel system with failure elements l, m, and r. During the reliability analysis at level 1 the safety margin for failure element l is determined and during the reliability analysis at level 2 the safety margin for the failure element m is determined. The safety margin for safety element r is determined during the reanalysis of the structure. From these safety margins the reliability indices β_l , β_m , and β_r and the correlation matrix $\bar{\bar{\rho}}$ can easily be calculated. The probability of failure for the parallel system then is

$$P_f = \Phi_3(\beta_l, \beta_m, \beta_r; \bar{\bar{\rho}}) \tag{13}$$

An equivalent safety margin can be determined by the procedure mentioned above. When the equivalent safety margins are determined for all critical triples of failure elements the correlation between them two and two can easily be calculated. The final step is then to arrange all the critical triples as elements in a series system (see figure 2) and estimate the probability of failure for the series system. When failure of a structure is defined as formation of a mechanism the β-unzipping method is used in connection with fundamental mechanisms. Consider an elasto-plastic structure and let the number of potential failure elements (e.g. yield hinges) be n. It is then known from the theory of plasticity that the number of fundamental mechanisms is $m = n - r$, where r is the degree of redundancy. All other mechanisms can then be formed by linear combinations of the fundamental mechanisms.

The total number of mechanisms for a structure is usually too high to include all possible mechanisms in the estimate of the system reliability. It is also unnecessary to include all mehcanisms because the majority of them will in general have a relatively small probability of occurrence. Only the most critical or most significant failure modes should be included. The problem is then how the most significant mechanisms (failure modes) can be identified. In this section it is shown how the β-unzipping method can be used for this purpose. It is not possible to prove that the β-unzipping method identifies all significant mechanisms, but experience with structures where all

mechanisms can be taken into account seems to confirm that the β-unzipping method gives reasonably good results. Note that since some mechanisms are excluded the estimate of the probability of failure by the β-unzipping method is a lower bound for the probability of failure.

The first step is to identify all fundamental mechanisms and calculate the corresponding reliability indices. The next step is then to select a number of fundamental mechanisms as starting points for the unzipping. By the β-unzipping method this is done on the basis of the reliability index $\beta_{\min}$ for the real fundamental mechanism that has the smallest reliability index and on the basis of a preselected constant ε_1 (e.g. $\varepsilon_1 = 0.50$). Only real fundamental mechanisms with β-indices in the interval $[\beta_{\min}; \beta_{\min} + \varepsilon_1]$ are used as starting mechanisms in the β-unzipping method. Let $\beta_1 \le \beta_2 \le ... \le \beta_f$ be an ordered set of reliability indices for *f* real fundamental mechanisms 1,2,.., *f*, selected by this simple procedure.

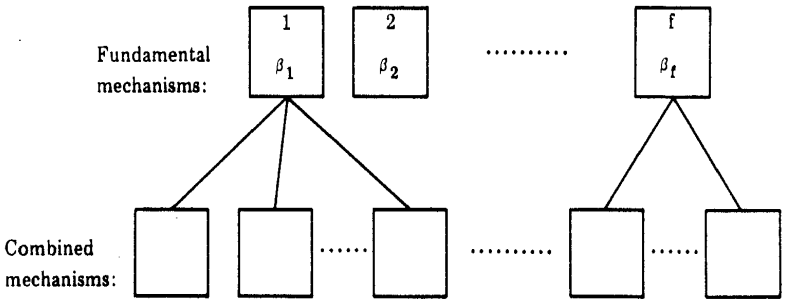

Figure 4. Construction of new mechanisms.

The f fundamental mechanisms selected as described above are now in turn combined linearly with all *m* (real and joint) mechanisms to form new mechanisms. First the fundamental mechanism 1 is combined with the fundamental mechanisms 2, 3, … , *m* and reliability indices $\beta_{1,2},...,\beta_{1,m}$ for the new mechanisms are calculated. The smallest reliability index is determined, and the new mechanisms with reliability indices within a distance ε_2 from the smallest reliability index are selected for further investigation. The same procedure is then used on the basis of the fundamental mechanisms 2, … , *f* and a failure tree as the one shown in figure 4 is constructed.

More mechanisms can be identified on the basis of the combined mechanisms in the second row of the failure tree in figure 4 by adding or subtracting fundamental mechanisms. By repeating this simple procedure the failure tree for the structure in question can be constructed. The maximum number of rows in the failure tree must be chosen and can typically be *m* + 2, where *m* is the number of fundamental mechanisms. A satisfactory estimate of the system reliability index can usually be obtained by using the same ε_2-value for all rows in the failure tree.

The final step in the application of the β-unzipping method in evaluating the reliability of an elasto- plastic structure at mechanism level is to select the significant mechanisms from the mechanisms identified in the failure tree. This selection can, in accordance with the selection-criteria used in making the failure tree, e.g. be made by first identifying the smallest β-value, $\beta_{\min}$, of all mechanisms in the failure tree and

then selecting a constant ε_3. The significant mechanisms are then by definition those with β-values in the interval [$\beta_{\min}$; $\beta_{\min}$ + ε_3]. The probability of failure of the structure is then estimated by modelling the structural system as a series system with the significant me-chanisms as elements (see figure 3).

The system reliability index β_S is by definition equal to the generalized reliability index, i.e.

$$\beta_S = -\Phi^{-1}(P_f) \tag{14}$$

where P_f is the probability of failure of the (structural) system.

4. OPTIMIZATION PROCEDURE

In this section the optimization procedure used in the test examples described in section 5 is presented.

The design variables are $x_i = 1/A_i$, $i = 1,\ldots,k$, where A_i is the cross-sectional areas and where k is the number of elements with different areas. The plastic section moduli W_i and the second moments of area I_i, $i = 1,\ldots, k$ are connected with the cross-sectional areas according to the formulas (see Gorman [10])

$$I_i = 3.2 \times A_i^2 \quad \text{and} \quad W_i = 1.84 \times A_i^{3/2} \tag{15}$$

The object function is the same as (1), i.e.

$$W(\bar{x}) = \sum_{i=1}^{k} l_i A_i = \sum_{i=1}^{k} l_i / x_i \tag{16}$$

where l_i now is the total length of all structural elements with the cross-sectional area A_i. The constraints are (3) and (5). The constraint (3) is equivalent to

$$g_i(\bar{x}) = x_i \geq 0 \quad , \quad i = 1,\ldots,k \tag{17}$$

where $\bar{x} = (x_1,\ldots,x_k)$.

The constraint (5) expresses that the system reliability index defined by (14) must be greater than or equal to some target value β_S^0, i.e.

$$\beta_S^0(\bar{x}) - \beta_S^0 = -\Phi^{-1}(P_f(\bar{x})) - \beta_S^0 \geq 0 \tag{18}$$

where $P_f(\bar{x})$, the probability of failure of the structural system, is calculated as described in section 3.

The single constraint (18) can be written

$$g_{k+1}(\bar{x}) = \beta_S(\bar{x}) - \beta_S^0 \geq 0 \tag{19}$$

The optimization problem is thus a non-linear problem with $k + 1$ constraints.

The non-linear programming code NLPQL, derived by Schittkowski [11], [12], is used in this investigation. This algorithm is a sequential quadratic programming algorithm in which optimization problems with quadratic object functions and linear constraints are solved sequentially.

The computational work involved in solving the optimization problem deescribed above can be divided into three parts:

I. Identification of critical failure modes by the β-unzipping method.

II. Evaluation of the system reliability index β_S for a given set of critical failure

modes.

III. Optimization calculations using the NLPQL algorithm.

The test runs presented in section 5 shows that the computer time used during part I am significantly greater than the computer time during part II. Further, that the computer time during part II is greater than during part III. It is therefore of great importance to keep the number of identifications of critical failure modes as low as possible. On the other hand, the convergence will be slow if the identified failure modes change too drastically during the iterative process. Therefore, it is chosen to identify failure modes at the start of the iteration (h = 0) and again after two steps (h =2) and then for h = 5, 10, 15,... where h is the step number.

The first operation (at step h = 0) is to use the β-unzipping method to identify significant failure modes at the chosen level in accordance with the starting values for $\bar{x}$. These failure modes are then unchanged during the next two iteration steps. For h = 2 new failure modes are identified on the basis of the improved values for the design variables. The significant failure modes identified for h = 0 are also included in the set of significant failure modes for h = 2, even if they have β-values which are somewhat greater than the new calculated value for $\beta_{\min}$. The coefficients in the safety margins for these failure modes are of course changed corresponding to the new values of $\bar{x}$. If failure is defined at a level below mechanism level the stiffness of the structure changes and therefore, the coefficients in the safety margins change. But if failure is defined at mechanism level and the failure elements are ductile (elasto-plastic material behaviour) the failure modes don't depend on the stiffness of the structure and the set of significant failure modes identified for h = 0 and h = 2 can therefore simply be added to form the set of failure modes to be used to evaluate the system reliability index. The procedure described above is now continued, i.e. the set of significant failure modes is updated for h = 5, 10, … .

Evaluation of the system reliability index given a set of significant failure modes has to be performed many times. As mentioned above evaluation of the system reliability index generally has to be done approximately. In the literature many approximations are suggested, see e.g. Thoft-Christensen [5]. Generally, the accuracy of the methods is an increasing function of the computer time needed for evaluation of the approximations. Therefore, the selection of an approximate method to be used in the optimization procedure has to be performed considering on one hand the computer time needed for evaluation and on the other hand the accuracy of the approximation. In the test runs in section 5 the so-called PNET method, Ang & Ma [13], is used.

Since the set of significant failure modes changes during the optimization process, the convergence proofs given in e.g. Schittkowski [14] are generally not valid here. But as the process converges it has to be expected that the set of significant failure modes and the coefficients in the corresponding safety margins don't change.

The special formulation of the optimization problem where the constraint g_{n+1} is very important has caused the following alternative test for optimality to be added to NLPQL

$$\sum_{i=1}^{k} c_1 \left| \frac{x_i^h - x_i^{h-1}}{x_i^h} \right| + c_2 \left| g_{k+1}(\bar{x}^h) \right| + c_3 \left| \frac{W(\bar{x}^h) - W(\bar{x}^{h-1})}{W(\bar{x}^h)} \right| < \varepsilon \tag{20}$$

where $\bar{x}^h$ is the value of $\bar{x}$ at iteration level h and ε is a prescribed value $<<1$. This stopping criterion can only be used at iteration levels where the set of significant failure modes is updated, i.e. when h = 2, 5, 10,... . c_1, c_2, and c_3 are prescribed constants.

5. EXAMPLES

Consider the frame shown in figure 5. It has 8 different structural elements and the object function is

$$W(\bar{x}) = 3.658\left(\frac{1}{x_1}+\frac{1}{x_2}+\frac{1}{x_3}+\frac{1}{x_4}+\frac{1}{x_5}\right)+6.096\left(\frac{1}{x_6}+\frac{1}{x_7}+\frac{1}{x_8}\right)$$

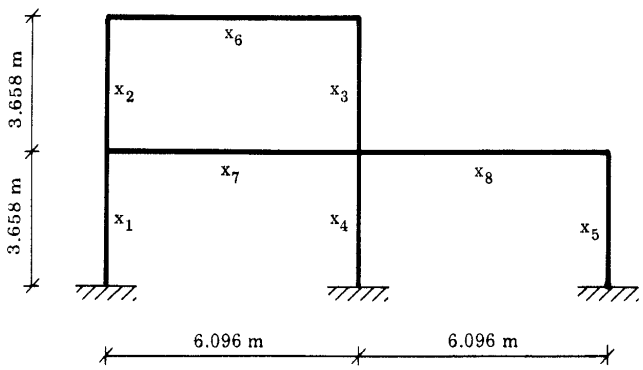

Figure 5. Geometry and optimization variables.

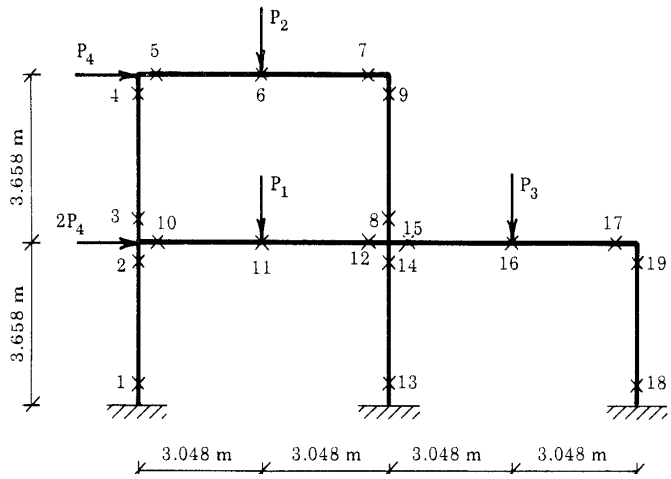

Figure 6. Loading and potential yield hinges (×).

Variables	Expected values	Coefficients of variation
P_1	169 kN	0.15
P_2	89 kN	0.25
P_3	116 kN	0.25
P_4	31 kN	0.25
R_1, R_2	μ_1	0.15
R_3, R_4	μ_2	0.15
R_8, R_9	μ_3	0.15
R_{13}, R_{14}	μ_4	0.15
R_{18}, R_{19}	μ_5	0.15
R_5, R_6, R_7	μ_6	0.15
R_{10}, R_{11}, R_{12}	μ_7	0.15
R_{15}, R_{16}, R_{17}	μ_8	0.15

Table 1.

The plastic section moduli W_i and the second moments of area I_i are calculated using (15) where $A_i = 1/x_i$.

The loading and the 19 failure elements (potential yield hinges) are shown in figure 6. The loads and the yield moments are modelled by 4 + 19 stochastic variables with the expected values and coefficients of variation shown in table 1. μ_i, i = 1,2,...,8 is determined by

$$\mu_i = W_i \times 270 \times 10^3 \text{ kNm}^{-2}$$

where W_i is given by (15).

The constants in the stopping criterion (20) are chosen to be

$$c_1 = c_2 = c_3 = 1 \text{ and } \varepsilon = 0.01$$

In the β-unzipping calculations the following values are used for quantities, which control the unzipping

$$\Delta\beta_1 = 2.0\,,\ \Delta\beta_2 = \Delta\beta_3 = 0.1$$

The target system reliability index is $\beta_S^0 = 3$. First it is assumed that $x_1 = x_2 = x_3 = x_4 = x_5$, i.e. all the columns have the same area. Further it is assumed that the yield moments are fully correlated in the columns with areas x_1, x_4, and x_5, and in the columns with areas x_2 and x_3. In figure 7 results from using the optimization procedure are shown when the reliability analysis is performed at level 1. As starting point $x_1 = x_2 = x_3 = x_4 = x_5 = x_6 = x_7 = x_8 = 0.01$ m^{-2} is used.

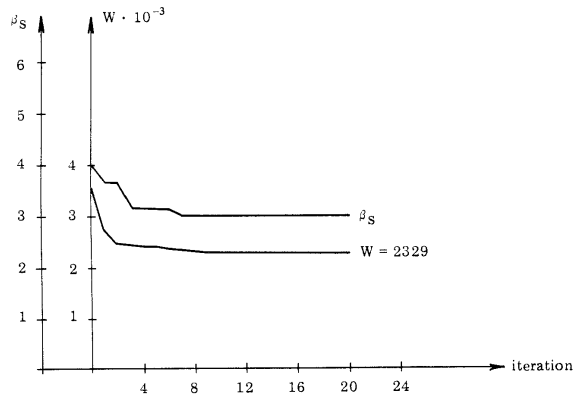

Iteration	No. of β-unz.	No. of β_S calc.	S_I	S_{II}	S_{III}	Significant failure modes
0	1	0	9.3	0	0.6	11 12
2	2	12	19.1	5.1	0.7	12 16 19 15 6 11 18 7
5	3	34	28.9	15.3	0.8	12 6 19 7 9 18 16 13 11 8
10	4	69	38.5	33.3	1.0	12 19 6 9 18 7 16 13 11 8 14
15	5	104	48.0	51.5	1.2	12 19 6 9 16 18 7 13 15 8 14
20	6	134	57.6	67.6	1.4	12 19 16 9 6 18 7 13 15 14 8

Figure 7. Iteration history for failure defined at level 1.

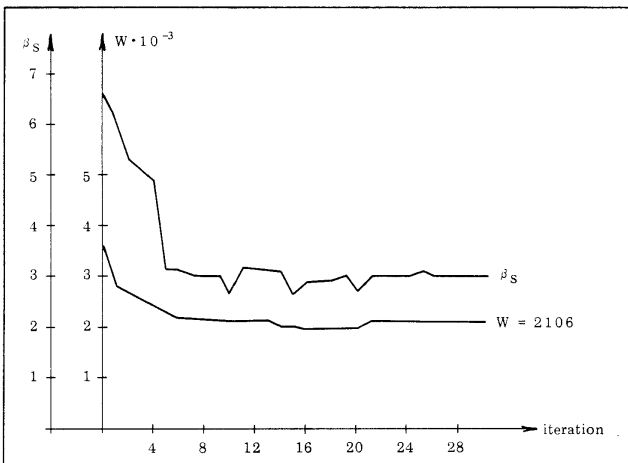

Iteration	No. of β-unz.	No. of β_S calc.	S_I	S_{II}	S_{III}	Significant failure modes
0	1	0	64.1	0	0.6	13 8 15 12 14 18 19 17 16 11 12 12 12 15 12 11 11 18 15 2
2	2	12	152	5.5	0.6	4 15 12 9 13 18 19 17 8 14 13 8 12 15 16 12 17 6 18 12 12 16
5	3	33	258	18.2	0.7	7 6
10	4	69	385	43.3	1.0	7 11 7 17 6 18 6 12 12 12 12 12
15	5	111	532	79.1	1.3	18 13 7 9 19 19 19 6 19 9
20	6	152	686	122	1.5	17 7 18 11 19 13 17 18 16 6 19 12 16 19 12 12
25	7	191	843	166	1.7	7 18 17 13 11 19 19 6 19 16 19 12 16 12
29	8	221	1001	200	1.9	7 17 18 11 13 19 19 6 16 19 12 19 16 12

Figure 8. Iteration history for failure defined at level 2.

In figure 7 the object function W and the system reliability index β_3 are shown as functions of the number of iterations. It is seen that convergence is obtained after 20 iterations. When the failure modes are updated the following data are shown in figure 7:

a) The number of β-unzipping performed

b) The number of calculations of β_S from the start of the algorithm

c) S_I. The total time in seconds used to perform β-unzipping calculations. The computer runs are performed on a CDC Cyber 170-730

d) S_{II}. The total time in seconds used to calculate system reliability indices β_S given the failure modes

e) S_{III} The total time used by the optimization algorithm. Included in S_{III} is also reading of the input

f) the significant failure modes. The numbers refer to the failure elements in figure 6. At failure level 1 each number corresponds to a failure mode. The failure modes are placed in a sequence of increasing safety indices. Only failure modes with safety indices in the interval [β_{min} , β_{min} +1] are shown.

It follows from figure 7 that S_I and S_{II} are of the same magnitude and that S_{III} is much less than S_I and S_{II}. Further it is seen that the number of significant failure modes increases with the number of iterations corresponding to all structural elements with different areas being represented within the set of significant failure modes at optimum. After iteration 5 the set of significant failure modes is almost constant.

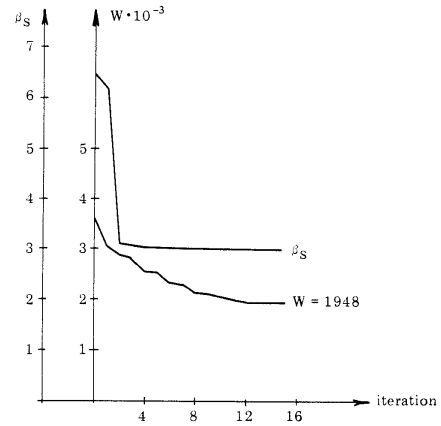

Iteration	No. of β-unz.	No. of β_S calc.	S_I	S_{II}	S_{III}	Significant failure modes
0	1	0	139	0	0.6	15 12 15 16 15 12 19 11 11
2	2	12	341	5.6	0.6	10 11 12
5	3	34	543	19.4	0.8	10 7 11 12 12 11
10	4	73	747	47.6	1.0	10 7 19 6 18 11 12 12 12 12 12 11 11 11 11
15	5	114	950	80.0	1.3	10 19 18 9 7 6 19 18 11 12 12 12 12 12 12 12 12 11 11 11 11 11 11 11

Figure 9. Iteration history for failure defined at level 3.

In figures 8 and 9 results are shown for cases where failure is defined at levels 2 and 3. The same trends are found as for failure defined at level 1. However, the convergence of β_S is more unstable.

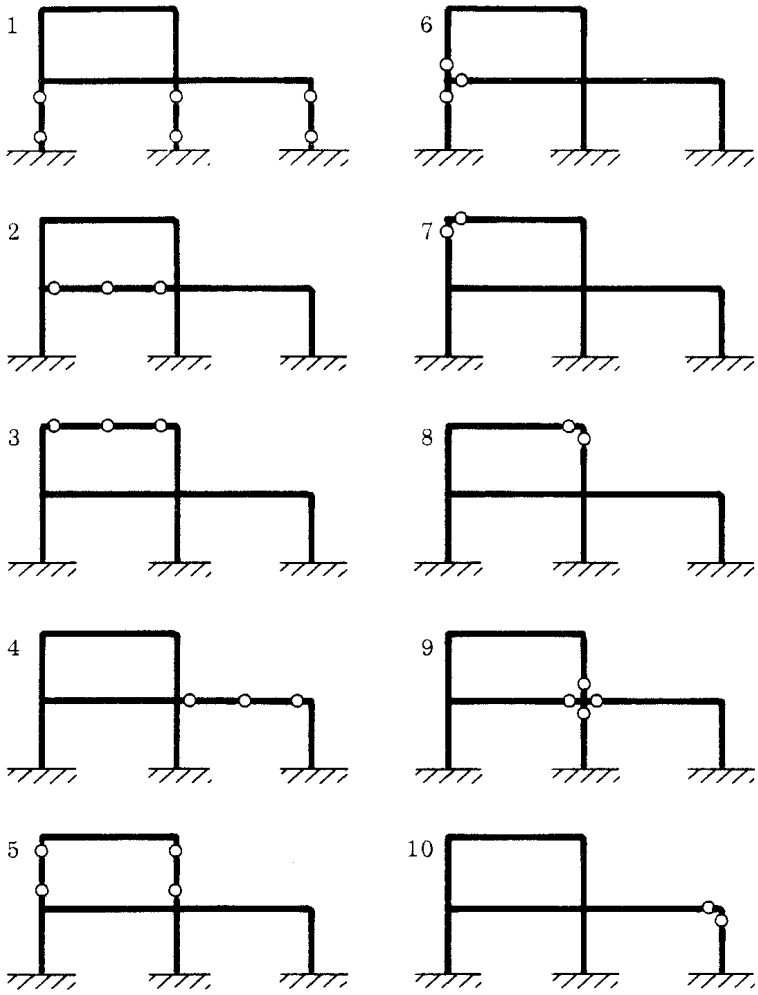

Figure 10. Set of fundamental mechanisms.

When failure is defined at mechanism level a set of fundamental mechanisms is needed. In this example the set shown in figure 10 is used. The constants in the β-unzipping method for failure defined at mechanism level are chosen as

$$\varepsilon_1 = 0.5\,,\ \varepsilon_2 = 0.1\,,\ \varepsilon_3 = 0.5$$

In figure 11 the iteration history is shown for failure defined at mechanism level and with the same starting point at used above. Again it is seen that the process converges, although there is a great fluctuation at iteration No.5. The numbers for the significant failure modes refer to the numbers of the fundamental mechanisms in figure 10. $i+j$, for example, signifies that the significant failure mode is obtained by a combination of the fundamental mechanisms i and j.

In table 2 the value of the areas of the structural elements and the value of the object function W at optimum are shown. As expected W decreases as the failure level increases.

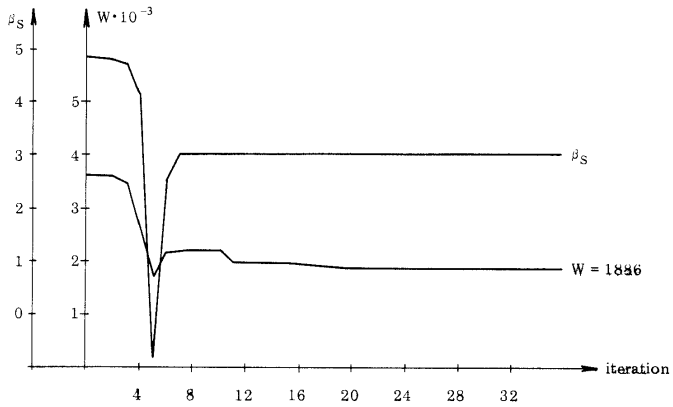

Iteration	No. of β-unz.	No. of β_S calc.	S_I	S_{II}	S_{III}	Significant failure modes							
0	1	0	10.6	0	0.1	2 4 3							
2	2	6	21.5	1.0	0.1	2 4 3	1						
5	3	10	32.1	2.2	0.2	1 2 4	4+10	2+6					
10	4	36	42.9	12.5	0.4	1 2 1+2+6	2+6	4	1+2+5+6	1+5	1+10		
15	5	63	53.5	29.5	0.6	2 1 4	4+10	2+6	1+2+6				
20	6	90	64.2	51.6	0.8	4 1 4+10	2	3	1+10	2+6	1+2+6		
25	7	116	75.0	75.6	1.0	1 2 4+10	4	3	2+6	1+2+6	1+10		
30	8	145	85.9	107	1.2	1 2 4	4+10	3	2+6	1+2+6	1+10		
35	9	173	96.7	140	1.4	1 2 4	4+10	3	2+6	1+2+6	1+10		

Figure 11. Iteration history for failure defined at mechanism level.

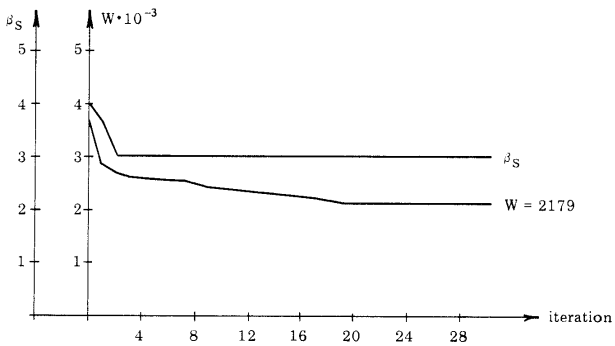

Iteration	No. of β-unz.	No. of β_S calc.	S_I	S_{II}	S_{III}	Significant failure modes									
0	1	0	9.3	0	0.6	12 11									
2	2	20	19.1	8.5	0.7	12 16	19	15	6	11	18	7			
5	3	55	28.9	23.2	1.0	12 13	14	6	11						
10	4	115	38.7	51.0	1.5	12 13	6	14	11						
15	5	174	49.0	78.6	2.0	12 6	13	11	18	14	9	16	19		
20	6	229	59.9	107	2.4	12 6	13	18	16	17	11	9	14	19	
25	7	295	70.7	145	2.9	12 6	17	13	16	18	11	9	14	19	
30	8	363	81.6	184	3.4	12 6	17	16	18	13	11	9	14	15	19

Figure 12. Iteration history for failure defined at level 1 (8 optimization variables).

Failure level	A_1	A_6	A_7	A_8	W
1	55.0	58.5	93.5	65.1	2329
2	52.0	51.9	82.6	55.0	2106
3	47.9	49.2	65.7	60.9	1948
mechanism	42.9	50.7	70.3	59.8	1886

Table 2.

In figure 12 results of a computer run where all 8 areas are treated as optimization variables are shown. Failure is defined at level 1. With the same starting point as above it is seen that convergence is also obtained in this example. The optimum values of the areas and W are A_1 = 24.3, A_2 = 29.8, A_3 = 55.6, A_4 = 57.2, A_5 = 71.9, A_6 = 61.5, A_7 = 86.6, A_8 = 66.0, and W = 2179. Compared with the case where all columns are equal the weight is reduced by 7%.

The results show that in some cases some of the different structural elements are not represented in the set of significant failure modes. For example, it is seen from figure 12 that the failure elements (1, 2, 3, and 4) in the structural elements with areas Al and A2 are not included in the optimum set of significant failure modes. However, results obtained with stronger convergence criteria show that these elements will be represented in the optimum set of significant failure modes, but that the change in the optimum weight is negligible.

6. CONCLUSION

In this paper the optimal design of a structural system with the constraint that the reliability of the structure has to be greater than fixed target reliability is considered. Several definitions of failure of the system are presented, namely failure at levell, 2,... corresponding to the number of so-called failure elements which have failed. If the structural material is elasto-plastic the structural failure can also be defined by formation of a yield mechanism. The significant failure modes are identified by the β-unzipping method and the reliability of the structure is measured using a generalized safety index calculated by the PNET -method.

It is assumed that the volume of the structure can be used as the object function in the optimization problem. An optimization procedure is suggested, where an existing optimization algorithm NLPQL (Schittkowski) is modified so that the set of significant failure modes is not identified for each call of the constraints, but only at some prescribed iteration levels.

The inverse of the sectional areas of the structural elements are used as design variables. Numerical results have shown that this choice gives a much faster convergence than using the sectional areas directly. The loading and the strength of the failure elements are modelled as normally distributed variables. The mean values of the strength variables are assumed to be functions of the structural areas. A new stopping criterion is implemented in the algorithm as an alternative to the convergence tests in NLPQL. This criterion is made in such a way that special consideration is given to the reliability constraint.

Since the algorithm is newly implemented only few numerical results are available, but a tentative conclusion is that the optimization procedure works well at least for some relative small examples. The rate of convergence is independent of the level at which failure is defined. The computer time increases considerably when the failure level increases, because the identification of significant failure modes becomes

very expensive. When the structural material is elasto-plastic and failure is defined as formation of a mechanism the computer time is of the same order as for failure defined at level 1. In all examples the computer time used on the optimization algorithm is negligible compared with the time used on β-unzipping and reliability calculations. Therefore, a slower algorithm such as the SUMT algorithm will also work satisfactorily.

The optimization procedure has not yet been tested on real, complex structural systems. In such systems the number of design variables will be much higher than in the examples considered in this paper. Offshore platforms, bridges and tower blocks are examples of complex structural systems where optimal design could be of great interest. In this paper only elasto-plastic material behaviour is considered. Brittle behaviour has not yet been investigated.

7. REFERENCES

[1] Templeman, A. B.: *Optimization Methods in Structural Design Practice.* J. Struct. Eng. Vol. 109, 1983, pp. 2420 - 2433.

[2] Thoft-Christensen, P. & Baker, M. J.: *Structural Reliability Theory and its Applications.* Springer- Verlag, Berlin - Heidelberg - New York, 1982.

[3] Thoft-Christensen, P.: *Some Experience from Application of Optimization Technique in Structural Reliability.* Bygningsstatiske Meddelelser, Vol. 48, 1977, pp. 31- 44.

[4] Thoft-Christensen, P.: *The β-unzipping Method.* Institute of Building Technology and Structural Engineering, Aalborg University Centre, Aalborg, Report 8207, 1982 (not published).

[5] Thoft-Christensen, P. & Sørensen, J. D.: *Calculation of Failure Probabilities of Ductile Structures by the {J-unzipping Method.* Institute of Building Technology and Structural Engineering, Aalborg University Centre, Aalborg, Report 8208, 1982.

[6] Thoft-Christensen, P.: *Reliability Analysis of Structural Systems by the β-unzipping Method.* Institute of Building Technology and Structural Engineering, Aalborg University Centre, Aalborg, Report 8401, March 1984.

[7] Thoft-Christensen, P. & Sørensen, J. D.: *Reliability Analysis of Elasto-Plastic Structures.* Proc. 11. IFIP Conf. "System Modelling and Optimizatiom", Copenhagen, July 1983. Springer-Verlag, 1984, pp. 556-566.

[8] Thoft-Christensen, P.: *Reliability of Structural Systems.* Advanced Seminar on Structural Reliability, Ispra, Italy, June 1984.

[9] Gollwitzer, S. & Rackwitz, R.: *Equivalent Components in First-Order System Reliability.* Reliability Engineering, Vol. 5, 1983, pp. 99-115.

[10] Gorman, M. R.: *Reliability of Structural Systems.* Report No. 79-2, Case Western Reserve University, Ohio, Ph.D. Thesis.

[11] Schittkowski, K.: *Theory, Implementation, and Test ofa Nonlinear Programming Algorithm.* Proc. Euromech-Colloquium 164 on "Optimization Methods in Structural Design", University of Siegen, October 1982. Bibliographisches Institut, Mannheim, Wien, Zürich, 1983, pp. 122-132.

[12] Schittkowski, K.: *A Unified Nonlinear Programming Theory for Penalty, Multiplier, SQP and ORO Methods.* Proc. 11. IFIP Conf. "System Modelling and Optimizatiom", Copenhagen, July 1983, Springer-Verlag, 1984, pp. 299-310.

[13] Ang, A. H. - S. & Ma, H. F.: *On the Reliability Analysis of Framed Structures.* Proc. ASCE Specialty Conference on Probabilistic Mechanics and Structural Reliability, Tucson 1979, pp. 106-111.

[14] Schittkowski, K.: *The Nonlinear Programming Method of Wilson, Han and Powell with an Augmented Lagrangian Type Line Search Function. Part* 1: *Convergence Analysis.* Numerische Mathematik, Vol. 38, 1981, pp. 83-114.