Variable flow controls of closed system pumps for energy savings in maritime power systems

Su, Chun-Lien; Liao, Chi-Hsiang; Chou, Tso-Chu; Chou, Ming-Hung; Guerrero, Josep M.

Published in:
Proceedings of Industry Applications Society Annual Meeting, 2016 IEEE

DOI (link to publication from Publisher):
10.1109/IAS.2016.7731818

Publication date:
2016

Document Version
Early version, also known as pre-print

Variable Flow Controls of Closed System Pumps for Energy Savings in Maritime Power Systems

Chun-Lien Su Chi-Hsiang Liao Tso-Chu Chou Min-Hung Chou
Senior M., IEEE
Department of Marine Engineering
National Kaohsiung Marine University
Kaohsiung City 805, Taiwan
cls@webmail.nkmu.edu.tw; chliao@webmail.nkmu.edu.tw; tcchou@csebulk.com; chouhp88scott@mail.nkmu.edu.tw

Josep M. Guerrero
Fellow, IEEE
Department of Energy Technology
Aalborg University
Aalborg, Denmark
joz@et.aau.dk
www.microgrids.et.aau.dk

***Abstract* --- Pumps are extensively used in maritime industries as marine vessels utilize a wide range of pumps and pumping techniques to transfer and distribute all types of air and fluids. The electrical energy consumed by the various motors accounts for about 70% of a vessel's total power consumption, and this presents a problem in unique marine environments. Such situations are especially conducive to energy-saving strategies using variable frequency drives (VFDs) in centrifugal load service. This paper presents the design and results of applying variable frequency constant pressure technology in closed system pumps on marine vessels. The existing problem of traditional control methods for closed system pumps is analyzed and a mathematical model for variable flow controls with the appropriate control settings is derived. The performance of the proposed method is demonstrated and verified through experimental and field tests of a practical auxiliary boiler feed water management system on a commercial vessel. It is proved that the proposed method can maintain constant water pressure for closed system pumps and provide an efficient way to measure energy savings and maintenance benefits. The results serve to highlight the significant energy-saving opportunities for retrofitted and new VFD installations in marine power applications.**

***Index Terms*: Closed system pump, Constant pressure, Energy efficiency, Maritime power system, Variable flow control**

I. INTRODUCTION

A ship power load covers various types of electrical equipment, including power pumps, lighting equipment, communication and navigation equipment, deck machines and the accommodation load. The power pump is the major user, accounting for about 70% of the total power consumption on a ship. Variable frequency control technology has been proposed and applied to ship power pump load energy efficiency optimization [1,2] in order to meet international maritime law and regulations, as well as energy conservation management requirements [3]. Marine engineering systems are complex, but they do reduce labor; however, when sensing equipment fails, the workload of engineers and the hazard potential increase. This is especially true when power pump equipment stops functioning due to a motor fault and the ship operation and navigational safety are negatively affected. The adaptive operation of power pumps under variable frequency control will assist operators in managing and maintaining marine engineering equipment operations more effectively [4].

The ship power pump load can be divided into deck machinery and engine room machinery according to the particular purpose [5]. The pumps, which can be classified into four types according to their operating principle, include the centrifugal pump, rotary pump, piston pump and ejection pump [6]. The centrifugal pump is the one most frequently used on ships, and its operation modes can be classified as open or closed systems [7]. In an open system centrifugal pump, the fluid conveyed by the pump performs an external circulation between the equipment and the outside. Typical open marine pumps include the ballast pump and the sea water cooling pump. In a closed centrifugal pump, the fluid performs an internal circulation between a pipeline system and the equipment. These pumps include the fresh water cooling pump, M/E jacket cooling fresh water pump, lubrication oil pump and auxiliary boiler feed water pump. Various methods have been proposed for controlling open pumps by means of variable frequency drives (VFDs) [1,2,4,8]; those proposed for closed pumps [9-16] have mainly focused on onshore power applications, with sparse literature regarding problems for closed pumps driven by VFDs in marine vessels or offshore power systems.

From a practical system operation point of view, the closed pumps can be controlled by means of VFD constant pressure controls, such as boiler feed water control, air compressor pressure control, constant temperature control, such as fresh and sea water cooling water controls, or conditional controls, such as central cooling water control or jacket water cooling water control. Before deciding which motor VFD to use, information on the control system design and control parameter settings is required. It is essential that a proper VFD closed pump system be designed which will increase energy savings, enhance control performance and improve system operations.

This paper presents a methodology for the design and application of variable frequency constant pressure

This work was supported by the Ministry of Science and Technology of Taiwan under Grant MOST 104-2628-E-022 -001-MY3.

technology in closed system pumps on marine vessels. The existing problems of traditional control methods for closed system pumps on vessels are analyzed, the principle of variable frequency controls is further elaborated and a mathematical model for determining the control settings is derived. Finally, a practical example of the design for a variable frequency control technique is given for an auxiliary boiler feed water pump.

II. Problem Statement

When the water supply system of a marine auxiliary boiler cannot instantly supply water to the system or stops supplying water, the compressed and heated parts in the boiler are damaged by high-temperature deformation as the high-pressure, high-temperature superheated vapor leaks due to atmospheric pressure. As the high-pressure, high-temperature superheated vapor expands quickly, the boiler structure failure is aggravated and more vapor is leaked, thus causing a violent chain reaction; in a very short period of time, the boiler explodes. The boiler feed system and water shortage warning sometimes have double supervision protection and interlocking controls in order to prevent such accidents.

When a marine boiler feed system works continuously, the water level in the boiler water drum is maintained, the automatic inlet valve of the boiler water drum is kept off and the line pressure between the feed water pump outlet and the inlet valve increases. In practical operations [5], when the cascade tank of a feed water system (steam system condensation water collecting cabinet) is preheated to 70~75 ℃ for oxygen removal and the feed water pump inlet temperature is maintained at about 70℃, the high pressure, high temperature and slight vaporization created inside the feed water pump will result in excessive wear on the impeller and mouth ring due to cavitation erosion. As the clearance between the impeller and casing ring in the feed water pump gradually increases, the pumping efficiency decreases and the power consumption of the pump driven by the motors increases, which may result in an electrical overload trip of the pump.

The actual problems of auxiliary boiler feed water management faced by marine engineers were studied in order to limit such faults. The ship chosen for this research was a double-hull large bulk carrier with a deadweight of 202,500 tons and a main engine horsepower of 25,320 HP. The three diesel generators, each having a rated power of 720 kW, and a 720 kW shaft generator, provide the power for the ocean voyages of the vessel. The ship is equipped with an auxiliary boiler, as shown in Fig. 1, with a steam output of 2,000 kg/h, operating pressure of 6.5 bar and maximum operating pressure of 8.0 bar. The boiler feed water pump was designed for continuous operation, with the opening of the automatic feed valve controlled according to the required boiler water level, and the water quantity controlled by the PID control mode. When the water level in the water drum descends, the feed valve is turned on gradually; if the water level is high, it is turned off gradually. The boiler feed water pump provides enough water for the boiler to produce vapor and supplies the pressure head; thus, the appropriate boiler evaporated water quantity demand and running operation pressure are required information. Fig. 2 shows the measured pressure of the auxiliary boiler feed water pump of the ship in port before improvement. According to the boiler rating data, the water supply capacity and supply pressure of the feed water pump were much higher than the evaporating capacity and operating pressure of the boiler. This resulted in the sustained overload operation of the feed water pump motor and frequent over-current trips, which increased the stress the engineer was under during his regular shift in the engine room.

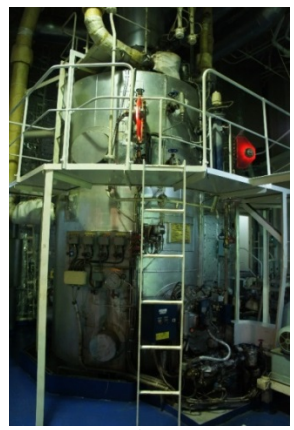

Fig. 1. Appearance of auxiliary boiler on a ship

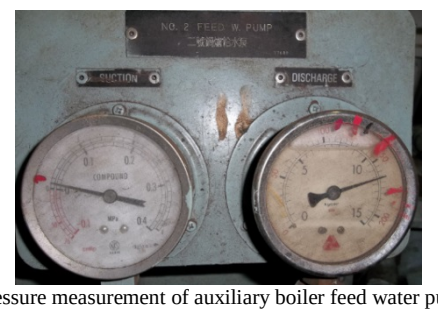

Fig. 2. Pressure measurement of auxiliary boiler feed water pumps on a ship in port before improvement

If the boiler feed water pump motor of the ship often has over-current trip warnings, the ship engineer must check the power supply system; if no errors are found, a further check must be made of the motor coil and motor bearings. If no errors are found, the over-current trip of the boiler feed water pump motor cannot be effectively eliminated and the focus turns from the power system to the pumping system machinery. In this research, when the feed water pump was overhauled, excessive wear of the internal mouth ring was

found, with a difference between the inside and outside diameter of the new and old products of 0.8 mm, as shown in Fig. 3, which meant that the outside diameter of the impeller had worn down 2 mm, as shown in Fig. 4. Due to the demand for the boiler feed of the ship, the overall process from the beginning of the water supply to the end was about 2 minutes; however, as the feed water pump used the continuous operation mode, when there was no need for the water supply, the automatic feed valve was turned off, so that the overall feed water system was always at high pressure. The high pressure and high temperature in the pump accelerated the abrasion of the mouth ring and impeller by cavitation erosion, which greatly reduced the water supply efficiency of the feed water pump and increased motor power consumption. In order to reduce the occurrence of over-current warnings, the ship engineer used a higher value of settings of the over-current relay (OCR), from 12.5A to 17A. In a sustained overload operation, the motor surface operating temperature is about 82℃, and long-term operation at a high temperature results in the loss of motor bearing grease, which shortens the motor bearing life and extends the motor maintenance period.

(a) New product (b) Old product

Fig. 3. Actual abrasion of mouth ring for feed water pumps

(upper left part shows new product, upper right part shows old product, lower part shows abrasion)

Fig. 4. Actual abrasion of impellers for feed water pumps

III. VFD Driven Feed Water Control System

When a ship is operating normally at sea or in port, the boiler heats water into steam to preheat the fuel and its oil purifying system, the lubricating oil and its oil purifying system, and the main engine jacket water system in the ship. The hot steam in the boiler is also used to blow soot out of the ship chimney or, when the ship is navigating at high latitudes, the boiler steam can be used for deicing. As the marine boiler load varies with the navigational configuration, and considering maritime meteorology in navigation, the marine boiler feed water is mostly controlled by the continuous running of the pump and the water level control valves. Whatever the feed valve body opening, the boiler feed water flows back through the by-pass pipe to the water supply storage tank and, as the pump works continuously, the water can be fed into the boiler for heating with minimum duration. The continuous water circulation prevents air locks in the pipeline, and the boiler circulation removes the oxygen from the water to avoid furnace oxidation pitting. This traditional auxiliary boiler feed water control mode solves probable false water level; however, when the valve body is off, the pump continues working and energy is wasted unnecessarily. Also, as the pump continuously applies pressure to the water in the pipe, the wear ring in the pump is likely to wear, reducing the efficiency of the feed water pump, causing overload trip and threatening boiler safety.

As the water level inside the boiler changes the automatic inlet valve opening, it influences the pressure variation in the hydraulic pipeline. This phenomenon can be used to determine the running speed of the pump, so the appropriate water quantity is provided according to changes in the boiler load for the ship. The constant pressure feed water control method for the marine auxiliary boiler proposed in this paper used constant pressure variable flow technology in order to supplement the required evaporated water quantity and maintain the required water level control at a certain system operating pressure. The new feed water control method controlled the running speed of the feed water pump according to the water level in the boiler by using additional pressure sensors, frequency converters and preset pressure values. Without changing the original boiler system components in the existing system structure, the stable and safe operation of a boiler system was implemented and energy conservation achieved.

Fig. 5 shows the scheme of the proposed control system; the control logic is presented in Fig. 6. In this operating system, the water level sensor detects the water level height in the boiler; when the water level is higher than the default value, the automatic feed valve is gradually turned off. If the actual feed pressure is higher than the setting value, the running speed of the feed water pump with VFD is automatically reduced according to the pressure setting value and field-measured data. When the water level is lower than the default value, the feed valve is gradually turned on. In this situation, the actual feed pressure is lower than the setting value, and the running speed of the VFD pump is automatically increased. Therefore, the feed valve switching status varies with the boiler water level, the feed pressure in the feed water piping system is maintained by the constant pressure variable frequency control so the energy

consumption is reduced and the life cycle of the pumps extended.

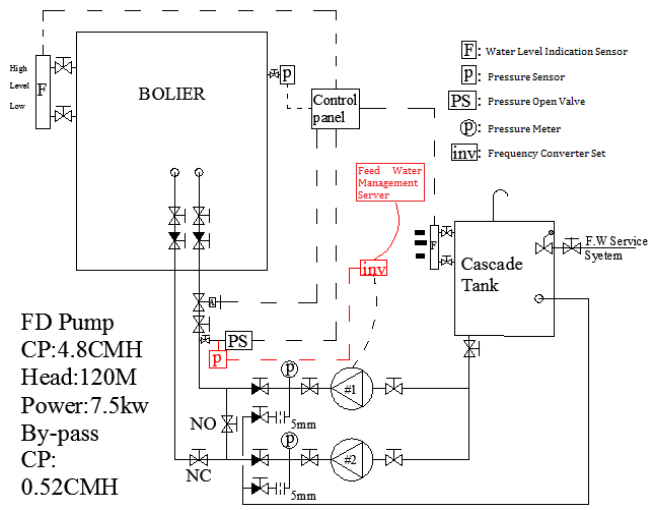

Fig. 5. Scheme of the proposed control system

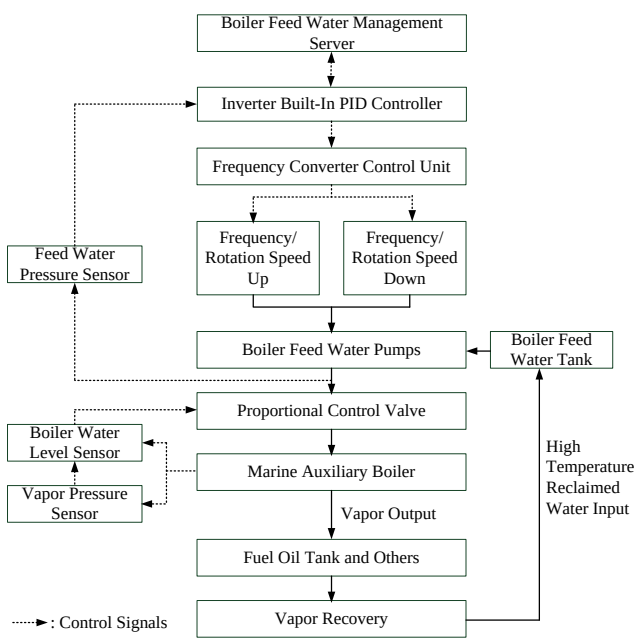

Fig. 6. Control logic of the proposed method

An appropriate feed pressure setting value has considerable influence on the overall control system operation [17], as it must overcome the operating pressure in the boiler, as well as the feed pipe system pressure loss. An excessive pressure setting value results in excessive pumping system operating pressure and additional power loss; otherwise, the feed water is insufficient, which negatively influences the system operational security. Therefore, an appropriate feed pressure setting value P_s is determined as:

$$P_s \geq P_{boiler} + P_{loss} \tag{1}$$

where P_{boiler} and P_{loss} are the operating pressures in the boiler (bar) and feed piping pressure loss (bar), respectively. For complicated closed system pump piping, the method for determining the piping pressure loss can be found in [8].

IV. Test Results and Discussion

The control system as proposed was designed and implemented. In order to both ensure and demonstrate the performance of the proposed method, the practical auxiliary boiler feed system of the ship under study was scaled down and a small experimental system was developed for the onshore testing and full-scale practical ship sea testing in order to assess the actual operational benefits obtained. Fig. 7 shows the experimental system scheme. For the practical boiler feed system, the technical data in Fig. 5 were used for the analysis.

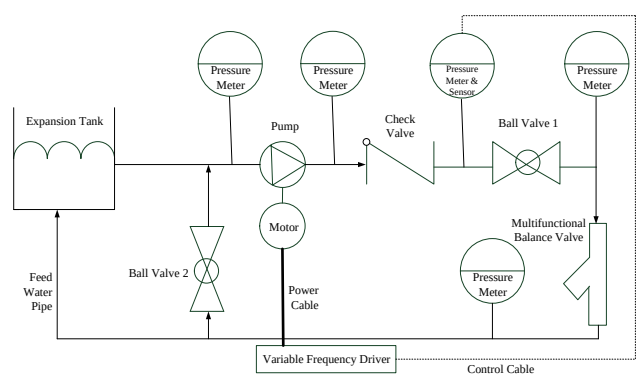

Fig. 7. Experimental system scheme

The fundamental purpose of the experimental system was to validate the feasibility of the constant pressure feed water control. Therefore, different types of devices were installed in the experimental system, as shown in Fig. 7. Ball valve 1 represents the lift control component of the overall experimental system in order to simulate the proportional control switch valve in the boiler feed water pump system of an actual ship, and the ball valve opening represents different feed pipe loss variations. For example, when the overall pipeline lift increases as the ball valve opening decreases, the stopping of the boiler feed water is simulated. When the feed pipe lift decreases as the ball valve opening increases, the boiler feed water of an actual ship is simulated. Ball valve 2 controls the overall experimental system as a closed-loop or an open-loop. When ball valve 2 is turned on, the experimental system is an open-loop; when ball valve 2 is turned off, the experimental system is a closed-loop. As the boiler feed system of a practical ship is a closed-loop, ball valve 2 was kept off during the experimental process. The check valve in the experimental

system kept the direction of flow from the pump outlet end to the expansion tank. First, the operation of the VFD motor was kept at 60 Hz, the check valve was tightened at approximately the full-off position, and the pressure reading on the pressure gauge at the back end of the check valve was about 2.45 bar. The feed pressure setting value was set at 0.69 bar. The frequency converter first worked at a full frequency of 60 Hz, in beginning to execute the PID control; the output frequency decreased gradually until the feedback pressure value dynamically approached the preset pressure value. When the ball valve opening was gradually increased to simulate the boiler feed water flow, the overall pipeline system lift decreased and the pressure feedback value at a low operating frequency was lower than the default pressure value of 0.69 bar. The VFD executed control again and the output frequency was gradually increased until the feedback pressure value dynamically approached the pressure default. The experimental results showed that the variable frequency constant pressure feed water control could accommodate the water supply according to the preset pressure value required to maintain the system stable operation.

For the practical shipboard field test, as the ship under study had two boiler feed water pumps, for a convenient comparison, one pump (No. 1 pump) was selected for variable frequency control. The boiler steam pressure was set at about 6.7 bar in the practical application. Considering the feed piping loss, after repeated testing of the ship in port, the water could be fed to the boiler normally when the feed pressure was about 8.5 bar. Therefore, the system pressure was set at a constant pressure value of 8.5 bar as the feed pressure default for the variable frequency constant pressure control. As the original system pressure was as high as 12 bar, the motor speed could be effectively reduced by the proposed method, thereby reducing the system operating pressure. When there was no need for feed water, as the system pressure exceeded the set value, the frequency converter increased the motor speed in order to increase the system pressure to the set value, thus avoiding any long-term high pressure and high temperature of the feed water pump, thereby reducing both the wear of the pump components and the electrical power consumption. Figs. 8 and 9 show the installation schematic of the variable frequency control system on the ship and the system operation monitoring human-machine interface, respectively. The frequency converter, as shown in Fig. 8, controlled the feed water pump motor speed according to the issues of the master station. All the operational information of the converter, including voltage, current, frequency and pressure values, was collected and transferred via the MODBUS protocol by the data collector to the master station in order to determine the proper control actions. The pressure sensor fed back the detected actual pressure as a 4~20mA current signal via the I/O contact of the frequency converter. The human-machine interface completely displayed the system operational data, control parameter settings, real-time operating data and control parameters so the engineer could know and record the real-time operating conditions and related operational data of the system. Such real-time field information and historical data are also useful for marine engineers, manufacturers and shipyard engineers for further analysis, equipment maintenance and overhaul.

Fig. 8. Schematic of variable frequency control system installed on a practical ship

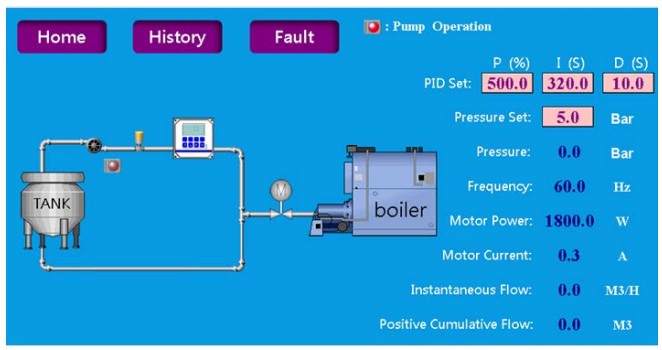

Fig. 9. Human-machine interface for system operation monitoring

Fig. 10 shows the system measurement data of a test run of a vessel in port, where the green curve is the frequency converter output frequency (Hz), the red curve is the pressure sensor data (bar), the purple curve is the frequency converter output current (A) and the light blue curve is the motor power (kW). As the rated power of the feed water pump was 7.5 kW, the boiler feed water pump motor power was about 11.5 kW in a 60Hz full-frequency operation before the variable frequency control was adopted, and the overload was severe. As the measurement data in Fig. 10 show, when the variable frequency control was used, the power was about 6 kW for a motor operating frequency of about 48 Hz. The feed pressure was about 8.0 bar, as shown in Fig. 11. The test result showed that when the variable frequency constant pressure control was used, the power

consumption of the motor was reduced by 40~50% when the feed water system was idle. There was a small surge-like 60 Hz operating state during the test, which may have been due to the proportional control valve supplying water to the boiler. This meant that the valve opening increased when the system pressure decreased, the frequency converter output frequency increased in order to return it to the lift of the control objective (preset pressure value), and the overall pump characteristic curve shifted up. As the motor operating frequency increased, in addition to the lift, the water quantity increased; thus, the boiler water level was replenished to the set water level point in seconds, the valve opening decreased accordingly and the lift increased. The converter output frequency was reduced in order to return to the objective lift; thus, the overall pump characteristic curve shifted down and system operations returned to the normal steady state.

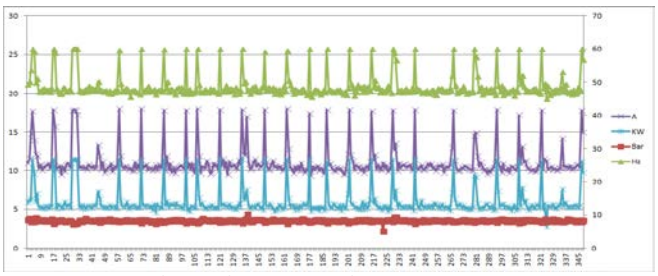

(please refer to left coordinates for motor current in A and power consumption in kW and refer to right coordinates for motor operating frequency in Hz and feed pressure in Bar)

Fig. 10. Test results of a test run of a practical ship in port

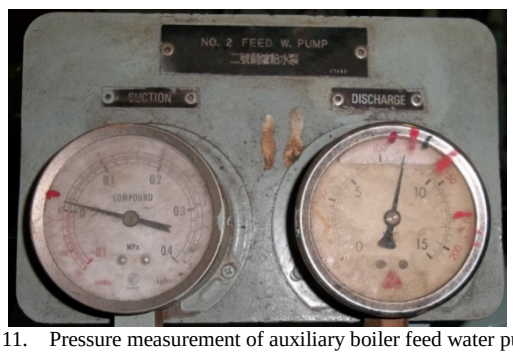

Fig. 11. Pressure measurement of auxiliary boiler feed water pumps on a practical ship in port using the proposed method

In order to ensure the performance of the proposed method under different operating conditions during the entire voyage of a practical ship, a ship voyage test was carried out; the test results are shown in Table I. According to the measurement data in Table I, when the variable frequency constant pressure control method proposed in this paper was used, the mean power consumption, feed pressure and operating frequency of the feed water pump motor were about 6.43 kW, 8.46 bar and 50.21 Hz, respectively. Compared with the system operating data without the proposed method, the proposed method effectively limited pump overload, and the average motor power consumption was lower than the rated power of 7.5 kW. The test results showed that the average temperature of the motor surface was about 75℃ before improvement and 62℃ after improvement, confirming that the overheating of the pump was effectively limited. The results also showed that with the proposed method, the average motor speed was reduced from 3600 rpm to about 3012 rpm and the average feed pressure was reduced from 10.1 bar to 8.6 bar, which effectively reduced both the wear of the pump wear ring and pump power consumption. The variable frequency equipment installed on a ship must conform to the voltage total harmonic distortion of 5%. As can be seen from the test results in Table I, when the variable frequency drive was installed, the maximum total harmonic distortion of the system voltage was about 1.86%, much lower than the limit for maintaining system operational security.

TABLE I
TEST RESULTS OF AN ENTIRE VOYAGE

Operating Data / Statistics	P (kW)	f (Hz)	P_S (bar)	V_{THD} (%)	I_{THD} (%)
Avg.	6.43	50.21	8.46	0.86	4.19
Max.	11.60	60.00	10.69	1.86	15.20
Min.	4.07	40.00	3.04	0.07	0.06

As the shipboard boiler feed lasts for only 2 minutes each time, the automatic feed valve is generally kept off, high pressure and high temperature are formed in the pump and there is slight gasification, thus shortening the life of the pump impeller and mouth ring. The proposed method met the performance requirements of a boiler feed water pump under all operating conditions of vessels, while also limiting pump overload and overheating, and reducing pump ring wear and energy consumption. However, these operational benefits often depend on the current condition of the existing mechanism of the pump. Table II shows the measurement data before and after the feed water pump was overhauled. In full-frequency operation, the motor current was about 18.9 A and 8.8 A, before and after the pump overhaul, respectively, while the motor surface temperature was about 72℃ and 53℃, respectively. In variable frequency operation, the operating data of motor current and surface temperature before and after overhaul were 13.7 A and 6 A and 70℃ and 52℃, respectively. At the same required feed pressure value of 7.85 bar, the motor operating frequency decreased from 52 Hz to 46 Hz, the required motor power decreased from 8.35 kW to 3.66 kW and the energy-saving percentage for the pump overhaul was about 56.20%. For the test system used in this paper, the energy-saving percentage was as high as 68.25% when the variable frequency control and pump overhaul were adopted simultaneously. The test results showed that the condition of the pump mechanism significantly influenced the effectiveness of the variable

frequency constant pressure control; thus, in order to maximize the system operational benefits, a proper pump mechanism performance enhancement strategy should be carefully devised and considered in the design and operation of the VFD closed system pump controls.

TABLE II
MEASUREMENTS BEFORE AND AFTER FEED WATER PUMP OVERHAUL

Operation Mode / Overhaul	Full frequency operation			Variable frequency operation (P_S: 7.85bar)			Casing Ring (mm)		Impeller A (mm)		Impeller B (mm)	
	I (A)	P_S (bar)	Motor surface temp. (°C)	f (Hz)	I (A)	Motor surface temp. (°C)	Inside diameter	Outside diameter	Outside diameter	Mouth ring	Outside diameter	Mouth ring
Before	18.90	10.20	72.00	52.00	13.70	70.00	44.80	66.00	84.20	86.90	77.50	80.60
After	8.80	10.59	53.00	46.00	6.00	52.00	44.00	66.00	86.30	86.50	79.80	80.00

Table III shows the cost-benefit analysis results of the proposed method. In the analysis, the oil consumption per unit energy output of the diesel generator was about 206 g/kWH, the oil-electricity conversion efficiency was 94% and the price of heavy oil was USD 0.00068/g. The annual consumable materials included one set of impeller, casing ring, intermediate sleeve and mechanical seal. The unit amount of energy savings obtained from the proposed method did not take into consideration the effect of the pump overhaul; rather, the average power consumption of the motor was used for calculation. In addition, the system operational benefits only considered the energy-saving benefit and pump wear ring consumables, expenditure reduction benefit and wage change benefit, while other intangible benefits, such as limiting pump overload and overheating, reducing the engineer's mental load and enhancing vessel navigation safety, were disregarded. According to the analysis results in Table III, the energy-saving benefit per voyage of the ship was about USD 335.33, the annual energy-saving benefit was about USD 4,896, the sum of the annual consumables expenditure reduction and wage change benefits was NTD (New Taiwan Dollar) 100,226 and the annual general benefit was NTD 157,101. The improvement equipment investment cost was NTD 350,000; thus, the return on investment (ROI) was about 1.42 years, showing the investment to be economical. If the analysis result is not acceptable in a particular case, the intangible benefits of the system operations could be further considered and quantified in regard to monetary value in order to enhance the justifiability of the investment.

V. CONCLUSION

A method for designing VFD constant pressure closed system pumps on marine vessels has been proposed herein. An analytical model was derived for determining the setting values used in the control system. A quantitative analysis of the energy savings was also performed after the pump mechanism enhancement. Experimental and field test results confirmed the economic benefits of the proposed method, which had been found theoretically. The test results indicated that the VFD constant pressure feed water control fit all performance requirements of a marine auxiliary boiler feed water management system and limited pump overload trip in its current operating condition; the electric motor protection coordination was enhanced. The results also showed that with the proposed method, the annual overhaul of the pumps could be avoided and their life cycle extended, thereby significantly reducing expenditures. Thus, a large fraction of the economic benefits of operating power pumps on marine vessels depends on improved electric drive controls and effective mechanism enhancements, as observed in the field test measurements.

TABLE III
COST-BENEFIT ANALYSIS RESULTS

Items	Values
Unit oil consumption (g/kWH)	206
Unit oil price ($/g)	0.00068
Unit amount of energy saving (kWH)	3.7548
Voyage running days	25
Voyage individual amount of energy saving (USD)	335.33
Annual energy savings (USD)	4,896
Annual energy savings (NTD)	146,875
Annual consumable material cost (NTD)	92,226
Consumption change labor cost (NTD)	8,000
Improvement equipment installation cost (NTD)	350,000
ROI (years)	1.42

REFERENCES

[1] S. V. Giannoutsos and S. N. Manias, "Development of an integrated energy efficiency control system for ship power balance and diesel generator fuel consumption optimization," in *Proc. 2013 IEEE IAS Annual Meeting*.

[2] S. V. Giannoutsos and S. N. Manias, "A data-driven process controller for energy-efficient variable-speed pump operation in the central cooling water system of marine vessels," *IEEE Trans. on Industrial Electronics*, vol. 62, no. 1, January 2015, pp. 587-598.

[3] *Implementing a Ship Energy Efficiency Management Plan (SEEMP): Guidance for Shipowners and Operators*, Lloyd's Register, Technical Report, June 2012.

[4] T. R. Gaerke and D. C. Hernandez, "Motor optimization for drive packages," IEEE Trans. on Industry Applications, vol. 51, no. 3, May-June 2015, pp. 2683-2690.

[5] R. L. Harrington, *Marine Engineering*, The Society of Naval Architects and Marine Engineers, 1992.

[6] E. F. Brater, H. W. King, J. E. Lindell, and C. Y. Wei, *Handbook of Hydraulics* (7th ed.), McGraw-Hill, Inc., 1996.

[7] J. Rishel, *Water Pumps and Pumping Systems* (1st ed.), McGraw-Hill, Inc., 2002.

[8] C. L. Su, W. L. Chung, and K. T. Yu, "An energy-savings evaluation method for variable frequency drive applications on ship central cooling systems," *IEEE Trans. on Industry Applications*, vol. 50, no. 2, March/April 2014, pp. 1286-1294.

[9] M. Neufeld, O. Ramirez, and A. Ustinovich, "A comparative study of fixed speed vs. variable speed control of a series configured pipeline pumping application," in *Proc. 2014 IEEE Petroleum and Chemical Industry Technical Conference*, San Francisco, CA, USA, pp. 491-500.

[10] W. S. Hopper, "Better to be lucky than good," *IEEE Industry Applications Magazine*, vol. 13, no. 6, November-December 2007, pp. 38-43.

[11] R. Cuzner, D. Drews, W. Kranz, A. Bendre, and G. Venkataramanan, "Power-dense shipboard-compatible low-horsepower

variable-frequency drives," *IEEE Trans. on Industry Applications*, vol. 48, no. 6, November-December 2012, pp. 2121-2128.
[12] W. S. Hopper, "Engineering selection for a variable speed drive; steam turbine drive or electric motor with VFD," in *Proc. 2006 IEEE Pulp and Paper Industry Technical Conference*, Appleton, WI, USA.
[13] C. Schmehl, A. Rockwell, M. McKinley, W. McBride, J. Kavanaugh, and R. Paes, "Adjustable speed drive selection for electric submersible pumps," in *Proc. 2014 IEEE Petroleum and Chemical Industry Technical Conference*, San Francisco, CA, USA, pp. 201-216.
[14] C. L. Su and K. T. Yu, "Evaluation of differential pressure setpoint of chilled water pumps in cleanroom HVAC systems for energy savings in high-tech industries," *IEEE Trans. on Industry Applications*, vol. 49, no. 3, May/June 2013, pp. 1015-1022.
[15] V. Verma, B. Singh, A. Chandra, K. Al-Haddad, "Power conditioner for variable-frequency drives in offshore oil fields," *IEEE Trans. on Industry Applications*, vol. 46, no. 2, March-April 2010, pp. 731-739.
[16] S. V. Giannoutsos and S. N. Manias, "A systematic power-quality assessment and harmonic filter design methodology for variable-frequency drive application in marine vessels," *IEEE Trans. on Industry Applications*, vol. 51, no. 2, March-April 2015, pp. 1909-1919.
[17] E. F. Brater, H. W. King, J. E. Lindell, and C. Y. Wei, *Handbook of Hydraulics* (7th ed.), Mc Graw Hill, Inc., 1996.

BIOGRAPHIES

Chun-Lien Su (S'97-M'01-SM'13) received the Diploma of Electrical Engineering from National Kaohsiung Institute of Technology, Taiwan, the M.S. and Ph.D. degrees in Electrical Engineering from the National Sun Yat-Sen University, Taiwan in 1992, 1997, and 2001, respectively. Since 2002, Dr. Su has been with the National Kaohsiung Marine University, Taiwan and is now Professor of the Marine Engineering Department. His main areas of interest are power system analysis and computing, power quality, and ship power and electrical systems.

Chi-Hsiang Liao received the B.S. and M.S. degrees in Marine Engineering of National Kaohsiung Marine University, Taiwan in 2011 and 2014, respectively. He was appointed as First Marine Engineer in fleet of China Steel Express (CSE) Corporation, Taiwan in 2006 and as Chief Marine Engineer of CSE Corporation in 2014. Since 2016, Mr. Liao has been with the National Kaohsiung Marine University and is now Lecturer of the Marine Engineering Department.

Tso-Chu Chou is now pursuing his M.S. degree in Marine Engineering of National Kaohsiung Marine University, Taiwan since 2012. He experienced the 4th Engineer, 3rd Engineer, second Engineer, Chief Engineer and Engineer Superintendent of Ship Management Department of China Steel Express Corporation from 1995 until now.

Min-Hung Chou received the B.E. degree from the Department of Marine Engineering, National Taiwan Ocean University, Keelung City, Taiwan, in 1995; the M.E. degree from the Department of Mechanical & Marine Engineering, National Taiwan Ocean University, Keelung City, Taiwan, in 1997. Since 2011, he has been with National Kaohsiung Marine University, Kaohsiung City, Taiwan and is currently an Assistant Professor with the Department of Marine Engineering. His current research interests include marine engineering fault simulation, marine engineering monitoring technology and its applications.

Josep M. Guerrero (S'01-M'04-SM'08-FM'15) received the B.S. degree in telecommunications engineering, the M.S. degree in electronics engineering, and the Ph.D. degree in power electronics from the Technical University of Catalonia, Barcelona, in 1997, 2000 and 2003, respectively. Since 2011, he has been a Full Professor with the Department of Energy Technology, Aalborg University, Denmark, where he is responsible for the Microgrid Research Program. From 2012 he is a guest Professor at the Chinese Academy of Science and the Nanjing University of Aeronautics and Astronautics; from 2014 he is chair Professor in Shandong University; and from 2015 he is a distinguished guest Professor in Hunan University.
His research interests is oriented to different microgrid aspects, including power electronics, distributed energy-storage systems, hierarchical and cooperative control, energy management systems, and optimization of microgrids and islanded minigrids; recently specially focused on maritime microgrids for electrical ships, vessels, ferries and seaports. Prof. Guerrero is an Associate Editor for the IEEE TRANSACTIONS ON POWER ELECTRONICS, the IEEE TRANSACTIONS ON INDUSTRIAL ELECTRONICS, and the IEEE Industrial Electronics Magazine, and an Editor for the IEEE TRANSACTIONS on SMART GRID and IEEE TRANSACTIONS on ENERGY CONVERSION. He has been Guest Editor of the IEEE TRANSACTIONS ON POWER ELECTRONICS Special Issues: Power Electronics for Wind Energy Conversion and Power Electronics for Microgrids; the IEEE TRANSACTIONS ON INDUSTRIAL ELECTRONICS Special Sections: Uninterruptible Power Supplies systems, Renewable Energy Systems, Distributed Generation and Microgrids, and Industrial Applications and Implementation Issues of the Kalman Filter; and the IEEE TRANSACTIONS on SMART GRID Special Issue on Smart DC Distribution Systems. He was the chair of the Renewable Energy Systems Technical Committee of the IEEE Industrial Electronics Society. He received the best paper award of the IEEE Transactions on Energy Conversion for the period 2014-2015. In 2014 and 2015 he was awarded by Thomson Reuters as Highly Cited Researcher, and in 2015 he was elevated as IEEE Fellow for his contributions on "distributed power systems and microgrids."