New Perspectives on Droop Control in AC MicroGrid

Sun, Yao; Hou, Xiaochao; Yang, Jian; Han, Hua; Su, Mei; Guerrero, Josep M.

Published in:
I E E E Transactions on Industrial Electronics

DOI (link to publication from Publisher):
10.1109/TIE.2017.2677328

Publication date:
2017

Document Version
Early version, also known as pre-print

New Perspectives on Droop Control in AC MicroGrid

Yao Sun, *Member, IEEE*, Xiaochao Hou, *Student Member, IEEE*, Jian Yang, *Member, IEEE*, Hua Han, Mei Su, and Josep M. Guerrero, *Fellow, IEEE*

***Abstract*—Virtual impedance, angle droop and frequency droop control play important roles in maintaining system stability, and load sharing among distributed generators (DGs) in microgrid. These approaches have been developed into three totally independent concepts, but present strong relevance. In this letter, their similarities and differences are significantly revealed. Some new findings are established as follows: 1) angle droop control is intrinsically a virtual impedance method; 2) virtual impedance method can also be regarded as a special frequency droop control with a power derivative feedback; 3) the combination of virtual impedance method and frequency droop control is equivalent to the proportional–derivative (PD) type frequency droop, which is introduced to enhance the power oscillation damping. As a whole, these analogous relationships provide the new insight into the design of these three controllers.**

***Index Terms*—Droop control, microgrid, virtual impedance.**

I. Introduction

MICROGRID is a future trend of integrating renewable generation units in distribution energy system, which generally consists of various inverter-based distributed generators (DGs). In islanded microgrid, the voltage/frequency stability and accurate load sharing are two important tasks. As three dominated solutions, virtual impedance, angle droop and frequency droop control have been separately developed for over a decade.

Virtual impedance method is early introduced to shape desired output impedances in uninterruptible power systems [1]. Then, it's widely utilized to decouple *P-Q* and eliminate reactive-power differences in microgrid due to the line impedance mismatch [2]-[3].

The angle droop control is developed to ensure proper load sharing in a rural distribution networks with highly resistive lines [4]. As it directly regulates the converter output voltage angle, a significant steady-state frequency drop is avoided.

The conventional *P-ω* frequency droop control is firstly proposed to achieve power sharing in parallel inverters without communication [5]. The basic idea of this control manner is to mimic the behavior of synchronous generators [6]. In addition, a larger value of droop gains improves power sharing accuracy, but increases the deviation of frequency/voltage from their normal values, resulting in a tradeoff [7].

Generally, virtual impedance method, angle droop and frequency droop control are utilized with different purposes in microgrid. But, sometimes they produce similar effects: 1) both virtual impedance and angle droop control are practicable to the highly resistive lines of microgrid; 2) the reactive power sharing can be ameliorated by regulating virtual impedance and *Q-V* droop gain, respectively. To explain these phenomena, the analogous relationships among them are discussed in this letter. Firstly, this study provides a new insight to treat virtual impedance. In fact, virtual impedance can be regarded as a *P-δ* and *Q-V* feedback control, which is similar to angle droop. Secondly, after taking the derivative form of angle droop, the equivalent character of virtual impedance is inherently a derivative type *P-ω* frequency droop and proportional type *Q-V* droop control. Thirdly, by combining frequency droop and virtual impedance method, a modified PD type *P-ω* frequency droop control is obtained to improve transient stability.

II. Comparing Virtual Impedance with Droop Control

A. Fundamental Concept of Frequency Droop

The conventional frequency droop control is expressed as follows in the inductive wires of AC microgrid [5].

$$\omega_r = \omega^* - mP \tag{1}$$

$$V_r = V^* - nQ \tag{2}$$

where ω_r and V_r are the angular frequency and voltage amplitude references of a voltage source inverter (VSI), respectively. ω^* and V^* represent values of ω and V at no load, and m and n are droop gains of *P-ω* and *Q-V*, respectively. P and Q are the output average active and reactive power of VSI.

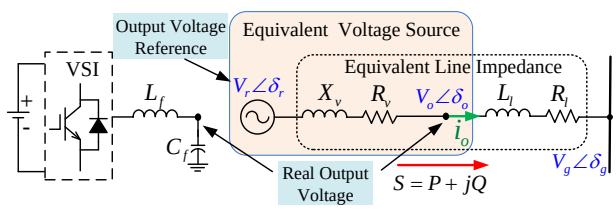

Fig. 1. Equivalent output voltage source considering virtual impedance.

B. Equivalence of Virtual Impedance and Angle Droop

The virtual impedance method is used to shape the output impedance of a VSI, as shown in Fig.1 [1]. It drops the output voltage reference proportionally to the output current.

$$v_o = v_r - Z_v i_o \tag{3}$$

where $Z_v = R_v + jX_v$ is the virtual impedance. $v_o = V_o\angle\delta_o$ and i_o are the output voltage and current, respectively. $v_r = V_r\angle\delta_r$ is the voltage reference of voltage-current dual closed loop.

According to Fig.1, we have

$$V_o\angle\delta_o\left(\frac{V_r\angle\delta_r - V_o\angle\delta_o}{R_v + jX_v}\right)^* = P + jQ \tag{4}$$

By substituting output power for output current in (3), power flowing through virtual impedance yields the associated voltage drop ΔV and phase angle difference δ_v. Simplifying (4) yields the following equations

$$\Delta V = V_r - V_o \cong \frac{R_v P + X_v Q}{V_o} \tag{5}$$

$$\delta_v = \delta_r - \delta_o \cong \frac{X_v P - R_v Q}{V_o V_r} \tag{6}$$

where V_r ,and δ_r are magnitude and angle of the reference voltage, respectively. V_o and δ_o are magnitude and angle of the output voltage, respectively.

For simplicity, V_r and V_o are replaced by V^* because their voltage magnitude lie in the acceptable range of the nominal voltage deviation. Moreover, when the virtual impedance is pure inductance, (5)-(6) are given by

$$\delta_o = \delta_r - m_d P \tag{7}$$

$$V_o = V_r - n_d Q \tag{8}$$

where

$$m_d = \frac{X_v}{V^{*2}} \; ; \; n_d = \frac{X_v}{V^*} \tag{9}$$

From (7) and (8), virtual impedance is regarded as a *P*-δ and *Q*-*V* feedback control. Especially, the form of (7) is equivalent to angle droop in [4], and the form of (8) is the conventional *Q*-*V* droop control. Reference [4] has proved that larger coefficients m_d and n_d can greatly improve the power sharing. Actually, it means that a larger virtual inductance is adopted to ameliorate line impedance mismatches. Thus, the equivalence provides a physical-based insight to tune the parameters of angle droop control.

C. *Analogy between Angle Droop and Frequency Droop*

By taking the derivative from the both sides of (7), the equivalent character of virtual inductance is given by

$$\omega_o = \omega_r - m_d \frac{dP}{dt} \tag{10}$$

where ω_r is the angular frequency of voltage reference. Usually, a pure derivative term of active power is replaced by a high-pass filter to suppress interference. Thus, the transient droop function (10) takes the form

$$\omega_o = \omega_r - \frac{m_d s}{s + \omega_c} P \tag{11}$$

where ω_c is the cutoff frequency of the high-pass filter.

From (11), virtual inductance method can be viewed as a special *P*-ω frequency droop control, whose droop gain is a washout high-pass filter [8]. In contrast to the static feedback of (1), the washout filter-based active power sharing doesn't cause the frequency deviation. In addition, it should be noted that the proposed washout filter-based reactive power sharing in [8] cannot improve the reactive power sharing.

D. *Improved Droop Control by Combining Virtual Impedance Method and Frequency Droop*

Usually, virtual impedance and frequency droop control are simultaneously adopted. Therefore, a modified droop control is presented as follows by substituting (1)-(2) into (8)-(10)

$$\omega_o = \omega^* - mP - m_d \frac{dP}{dt} \tag{12}$$

$$V_o = V^* - (n + n_d)Q \tag{13}$$

Clearly, the *P*-ω droop is changed to a PD type frequency droop control in (12). According to (13), an equivalent *Q*-*V* droop gain n_d resulting from virtual impedance, is added to improve reactive power sharing.

III. Small Signal Analysis

Small-signal analysis of (12) is an effective tool to reflect the power angle response. According to Fig.1, the output active power of VSI is expressed as [1]

$$P = \frac{V_o V_g}{Z}\cos(\theta - \delta_l) - \frac{V_g^2}{Z}\cos\theta \tag{14}$$

where Z and θ are the magnitude and phase of the output line impedance. $V_g \angle \delta_g$ is the common bus voltage. δ_l is the power angle, expressed as

$$\delta_l = \delta_o - \delta_g \tag{15}$$

Using the linearized model (14)-(15), the corresponding transient model around the steady-state is formed.

$$\Delta P = k_{P\delta}\Delta\delta_l \; ; \; \Delta\delta_l = \Delta\delta_o - \Delta\delta_g = \frac{1}{s}(\Delta\omega_o - \Delta\omega_g) \tag{16}$$

where $k_{P\delta} = \partial P / \partial \delta_l$ is a differential coefficient.

In consideration of the low-pass power filter, the output characteristic of modified droop in (12) is given by

$$\Delta\omega_o = \Delta\omega^* - \frac{m + m_d s}{\tau s + 1}\Delta P \tag{17}$$

Substituting (17) in (16) yields

$$\Delta P = \frac{(\tau s + 1)k_{P\delta}}{\tau s^2 + (1 + m_d k_{P\delta})s + m k_{P\delta}}(\Delta\omega^* - \Delta\omega_g) \tag{18}$$

For a typical second-order model of characteristic equation in (18), the damping ratio ζ is obtained

$$\zeta = \frac{1 + m_d k_{P\delta}}{2\sqrt{m k_{P\delta}\tau}} \tag{19}$$

By tuning parameters, τ and m_d, the transient response can be regulated appropriately without compromising steady state. The function of the derivative feedback is to enhance the damping of power oscillation and dynamic stability.

TABLE I.
The Analogous Relationships Among Virtual Impedance Method, Angle Droop and Frequency Droop In AC Microgrid

Equivalent feedback control	Advantages		Potential drawbacks
Virtual impedance control (3)	✓ Without communication ✓ Constant frequency regulation ✓ Improved power sharing performance ✓ Not affected by the physical parameters	✓ One DOF	× Cannot guarantee accuracy power sharing × Require global positioning system (GPS) signals to synchronize DGs × Marginally stable system, poor robustness × Slow dynamic response
Angle droop control (7)		✓ Two DOF	
Washout filter-based method (11)			
Frequency droop+ Virtual impedance (1)+(3)	✓ Without communication ✓ Accuracy active power sharing ✓ Satisfactory transient progress ✓ Robust to system parameters	✓ One DOF	× Frequency deviation × Require relatively high bandwidth for controller
PD type frequency droop (13)		✓ Two DOF	

Furthermore, as virtual inductance only provides one degree of freedom (DOF) in (9), m_d and n_d are dependent. Therefore, transient response and reactive power sharing cannot be separately regulated by virtual inductance. Alternatively, the modified droop control in (12)-(13) should be adopted. On the whole, the analogous relationships among these control strategies are presented in Table I.

IV. SIMULATION RESULTS

To verify the unified control law between the conventional droop control with virtual impedance and the modified droop control (12)-(13), the control scheme and simulation model with three parallel-connected DGs are built in Fig. 2.

Firstly, the frequency droop control (1)-(2) with gains $m = 3\times10^{-4}$ and $n = 1\times10^{-3}$ is tested as shown in Fig. 3(a.1)-(c.1). Secondly, virtual reactance $X_v = 0.9\ \Omega$ is added in Fig. 3(a.2)-(c.2). Finally, according to equivalent relationship of (9), $m_d = 1\times10^{-5}$ and $n_d = 3\times10^{-3}$ are adopted, instead of virtual impedance, whose results are shown in Fig. 3(a.3)-(c.3).

Fig.3 reveals that frequency droop plus virtual impedance have the equivalent functions to the modified droop (12)-(13) in respects of improving the transient response and reactive power sharing accuracy.

V. CONCLUSION

After comparing three different concepts, virtual impedance method, angle droop and frequency droop control, the inherent relationships are established in this letter. Three important viewpoints are pointed out: 1) virtual impedance, angle droop and washout filter-based method are equivalent each other; 2) virtual impedance is in consistency with the *Q-V* droop gain to improve power sharing; 3) an improved frequency droop with a power derivative feedback is introduced to damp the power oscillatory and improve the transient response.

VI. REFERENCES

[1] J. M. Guerrero, L. GarciadeVicuna, and J. Matas, "Output impedance design of parallel-connected UPS inverters with wireless load-sharing control," *IEEE Trans. Ind. Electron.*, vol.52, no.4, pp.1126-1135, Aug.2005.

[2] J. He and Y. Li, "Analysis, design, and implementation of virtual impedance for power electronics interfaced distributed generation," *IEEE Trans. Ind. Appl.*, vol.47, no.6, pp. 2525-2538, Nov. 2011.

[3] H. Mahmood, D. Michaelson, and J. Jiang, "Accurate reactive power sharing in an islanded microgrid using adaptive virtual impedances," *IEEE Trans. Power Electron.*, vol.30, no.3, pp. 1605-1617, Mar.2015.

[4] R. Majumder, G. Ledwich, A. Ghosh, S. Chakrabarti, and F. Zare, "Droop control of converter-interfaced microsources in rural distributed generation, " *IEEE Trans. Power Del.*, vol. 25, no. 4, pp.2768-2778, Oct. 2010.

[5] M. C, Chandorkar, D. M. Divan, and R. Adapa, "Control of parallel connected inverters in standalone ac supply systems," *IEEE Trans. Ind. Appl.*, vol.29, no.1 pp.136-143, Jan.1993.

[6] S. D'Arco and J. A. Suul, "Equivalence of virtual synchronous machines and frequency-droops for converter-based microgrids, " *IEEE Trans. Smart Grid*, vol. 5, no. 1, pp. 394-395, Jan. 2014.

[7] J. M. Guerrero, J. C. Vasquez, J. Matas, L. G. de Vicuna, and M. Castilla, "Hierarchical control of droop-controlled AC and DC microgrids—A general approach toward standardization," *IEEE Trans. Ind. Electron.*,vol. 58, no. 1, pp. 158-172, Jan. 2011.

[8] M. Yazdanian and A. Mehrizi-Sani,"Washout filter-based power sharing," *IEEE Trans. Smart Grid*, vol.7, no.2, pp.967-968, Mar.2016.

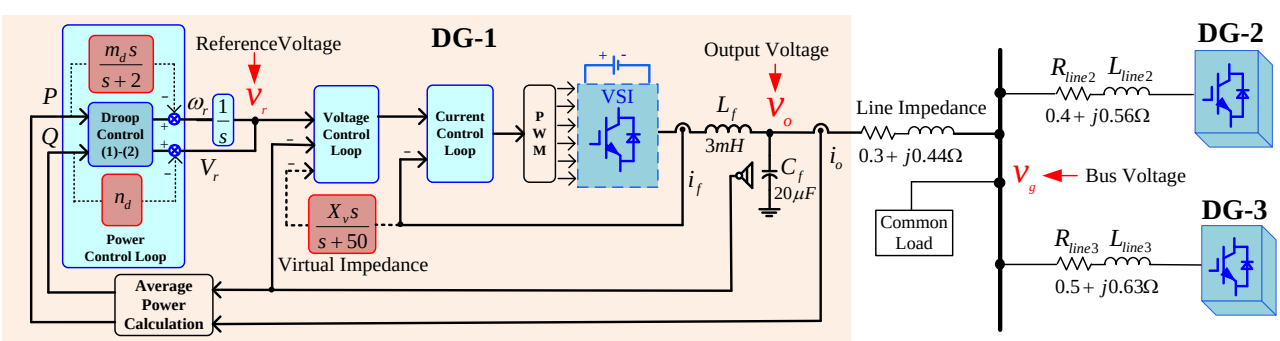

Fig. 2. Control schematic and test model of simulations in Matlab/simulink.

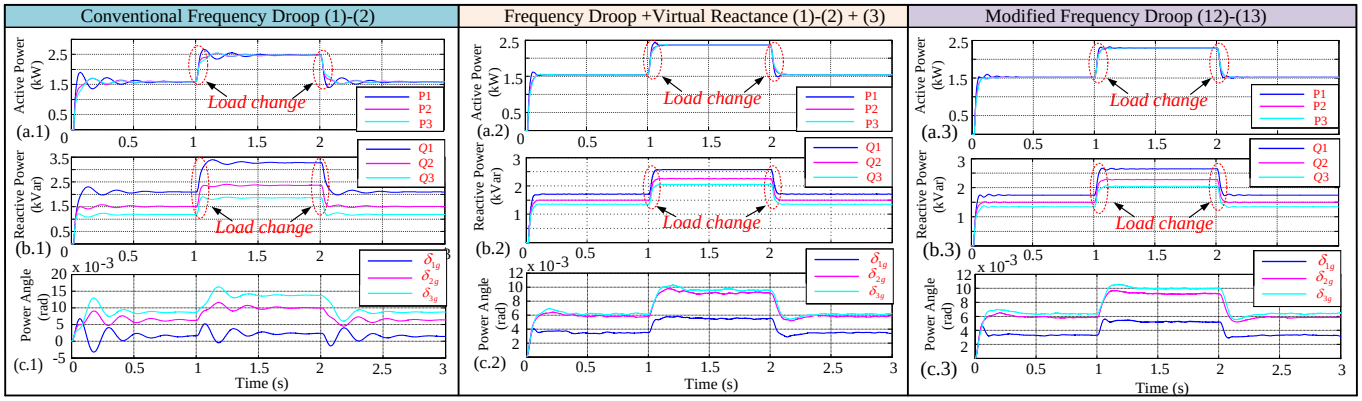

Fig. 3. Comparisons of (a) active power, (b) reactive power, and (c) power angle under three methods.