Aalborg Universitet

AALBORG UNIVERSITY
DENMARK

Hierarchical Control Design for Shipboard Power System with DC Distribution and Energy Storage aboard Future More-Electric Ships

Jin, Zheming; Meng, Lexuan; Guerrero, Josep M.; Han, Renke

Published in:
I E E E Transactions on Industrial Informatics

DOI (link to publication from Publisher):
10.1109/TII.2017.2772343

Publication date:
2018

Document Version
Accepted author manuscript, peer reviewed version

Link to publication from Aalborg University

Citation for published version (APA):
Jin, Z., Meng, L., Guerrero, J. M., & Han, R. (2018). Hierarchical Control Design for Shipboard Power System with DC Distribution and Energy Storage aboard Future More-Electric Ships. *I E E E Transactions on Industrial Informatics*, *14*(2), 703-714. https://doi.org/10.1109/TII.2017.2772343

General rights
Copyright and moral rights for the publications made accessible in the public portal are retained by the authors and/or other copyright owners and it is a condition of accessing publications that users recognise and abide by the legal requirements associated with these rights.

- Users may download and print one copy of any publication from the public portal for the purpose of private study or research.
- You may not further distribute the material or use it for any profit-making activity or commercial gain
- You may freely distribute the URL identifying the publication in the public portal -

Take down policy
If you believe that this document breaches copyright please contact us at vbn@aub.aau.dk providing details, and we will remove access to the work immediately and investigate your claim.

This is the author's version of an article that has been published in this journal. Changes were made to this version by the publisher prior to publication.
The final version of record is available at http://dx.doi.org/10.1109/TII.2017.2772343

Hierarchical Control Design for Shipboard Power System with DC Distribution and Energy Storage aboard Future More-Electric Ships

Zheming Jin, *Student Member, IEEE,* Lexuan Meng, *Member, IEEE,* Josep M. Guerrero, *Fellow, IEEE,* Renke Han, *Student Member, IEEE*

***Abstract*—DC distribution is now becoming the major trend of future mobile power systems, such as more-electric aircrafts and ships. As DC distribution has different nature to conventional AC system, new design of well-structured control and management methods will be mandatory. In this paper, shipboard power system (SPS) with DC distribution and energy storage system (ESS) is picked as study case. To meet the requirement of control and management of such a large-scale mobile power system, a hierarchical control design is proposed in this paper. In order to fully exploit the benefit of ESS, as well as to overcome the limitation in controllability, a novel inverse-droop control method is proposed, in which the power sharing is according to the source characteristic, instead of their power rating. A frequency-division method is also proposed as an extension to the inverse-droop method for enabling hybrid energy storage system (HESS) and its autonomous operation. On the basis of the proposed methods, the control methods for management and voltage restoration levels are also proposed to establish a comprehensive control solution. Real-time simulations are carried out to validate the performance of proposed control design under different operating conditions. When compared to more conventional droop based approaches, the new proposal show enhancement in efficiency.**

***Index Terms*—Shipboard power system, DC distribution, energy storage, hierarchical control, more-electric ship, islanded microgrid.**

I. Introduction

DRIVEN by the increased onboard electrical power demand and the progressively stricter environmental requirements, marine industry is dedicating to develop new solutions for the future vessels [1]-[4]. In 1990s, power electronic converters (PECs) have made breakthrough in the field of marine vessels for enabling electrification of the propulsion systems through variable voltage variable frequency drive technology [2]-[4]. The advantages obtained from PECs, including efficiency improvement, space saving and maneuverability enhancement, have resulted in the current tendency to further electrify the vessel, namely more-electric ship (MES). In addition to the use of electric propulsion, the most important change is the new integrated power system (IPS) design, in which the power generated aboard a vessel is now available for all the onboard systems instead of being exclusive for either propulsion or ship services loads [5]-[8].

In recent studies, several emerging technologies are being considered and installed aboard prototyping vessels to enhance the system performance, including DC distribution [9]-[11], energy storage systems (ESSs) [12], [13], low-emission power sources, e.g. fuel cell (FC) [14] and gas turbine genset [15], [16], and onboard renewable energy sources (e.g. PV array) [17]. Among them, DC distribution and ESS can contribute to both the efficiency and reliability of the SPS, thus becoming the trend of future MES [1], [2], [12]. Moreover, it is noteworthy that ESSs inherently operate in DC, therefore, DC distribution based SPS (DC-SPS) is more efficient to integrate ESSs, as well as to support electric propulsion systems. Meanwhile, with the presence of ESSs, generators with slow dynamic (e.g. FC and gas turbine) or intermittence (i.e. renewables) and specific operating scenarios (e.g. zero-emission operation in port) can be easily enabled. In this case, future DC-SPSs are expected to be the flexible platform which allows using various power sources as well as effectively supporting onboard loads with different characteristics, such as dynamic and pulsed-power loads [18]. However, the system-level control and management will remain a challenging issue, especially considering the fast-changing load conditions and mission setting of the vessel.

PEC is the enabling technology of DC-SPS, through which components with either AC or DC nature in different voltage levels can be connected to the DC distribution network. Several innovative PEC designs have been proposed in [19]-[21], aiming at the high-voltage high-power requirement of marine applications. However, the fast-switching nature of PECs makes their reliability and robustness much poorer than conventional transformers, which is a major obstacle to their application in marine vessels. For this reason, 6-pulse and 12-pulse diode rectifiers are also used as present-stage solution for interfacing gensets to the DC distribution network [1], [22]. Meanwhile, controllable PECs are indispensable as the "DC transformers" to interface ESSs and FCs. In this context, the present-stage DC-SPS is an interesting mix of uncontrollable and controllable PECs, thus introducing unique challenges and additional troubles on control design.

Technically speaking, the future DC-SPS features in isolated operation and diversified power sources, thus it is reasonable to identify them as islanding microgrids (MGs). It is noteworthy that the major challenges are essentially the same in both applications, which is to maintain self-sustainable operation of the islanding power system. During the past decade, there have

The authors are with Department of Energy Technology, Aalborg University, Aalborg, Denmark, (e-mail: zhe@et.aau.dk, lme@et.aau.dk, joz@et.aau.dk, rha@et.aau.dk).

Copyright (c) 2017 IEEE. Personal use is permitted. For any other purposes, permission must be obtained from the IEEE by emailing pubs-permissions@ieee.org.

This is the author's version of an article that has been published in this journal. Changes were made to this version by the publisher prior to publication.
The final version of record is available at http://dx.doi.org/10.1109/TII.2017.2772343

been active research activities undergoing in the field of terrestrial MGs, resulting in advanced research outcomes reported in [23]-[28]. Currently, the multi-layer hierarchical control architecture is widely used and becoming standardized solution for terrestrial MGs, in which different control and management objectives are solved independently as different control layers [23]. However, hierarchical control architecture is rarely reported in the field of DC-SPS.

In this paper, a three-layer hierarchical control design is proposed for DC-SPS with considerations of the particularities in shipboard applications and diesel-dominant generation. For the power-sharing level control, a novel inverse-droop control method is proposed to coordinate the output power of gensets and ESSs with respect of their different characteristics. In addition to that, a frequency-division method is also proposed as an extension of inverse-droop method to enable hybrid energy storage system (HESS) and its characteristic-based autonomous operation. For the higher-level control, the control method to achieve power management and nominal bus voltage restoration functions are presented to provide a comprehensive control architecture for DC-SPS.

The rest of this paper is organized as follows: in Section II, the state-of-the-art of DC-SPS is introduced. Section III gives a detailed introduction of the proposed methods and hierarchical control design. In Section IV, hardware-in-loop simulations are carried out with the study case of DC-SPS. A comparison is made between droop-controlled and inverse-droop-controlled cases. Section V concludes this paper.

II. DC-SPS and Its Major Components

Recommended by *IEEE Standard 1709-2010* [1], a typical case DC-SPS includes gensets, FCs and ESSs as power sources, electric propulsion systems and ship-service loads as power consumer. Moreover, onboard renewables are recently taken into consideration as optional power sources. For all vessels that to be classified by classification societies like DNV GL and ABS, the most important rule in early-stage design of SPS is to always have enough power to keep the vessel in position, even if some major parts have failed. For this reason, a SPS should have at least two independent subsystems, and therefore, zonal electric distribution system (ZEDS), as illustrated in Fig. 1, is preferred for its fault tolerance and reconfiguration capability [10], [11]. Such a system can be sectionalized into several MGs with a simplified single-line structure as shown in Fig. 2. It is also noteworthy that each of these zonal MGs are expected to be self-sustainable and controlled independently, especially in case of naval vessels. Meanwhile, "N+X" redundant design is common in marine vessels, in which extra gensets with the same type are installed for backup and alternation.

The nominal voltage of a DC-SPS is case-by-case designed, varying from 690V to 6600V [1], [29]. Correspondingly, the total power demand of the system can be hundreds of kilowatts to tens of megawatts depending on the different types/classes and the different usage of the vessel. Normally, the propulsion systems will consume most of the onboard power with some load fluctuations due to the inherent uncertainty of the water surface [2]. In addition, the unique dynamic positioning (DP) operation of drilling and supporting vessels will introduce fast and dramatic load changing to the system.

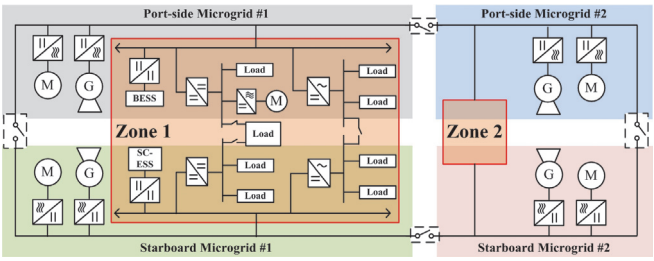

Fig. 1. Illustration of typical ZEDS based architecture and its sectionalizing.

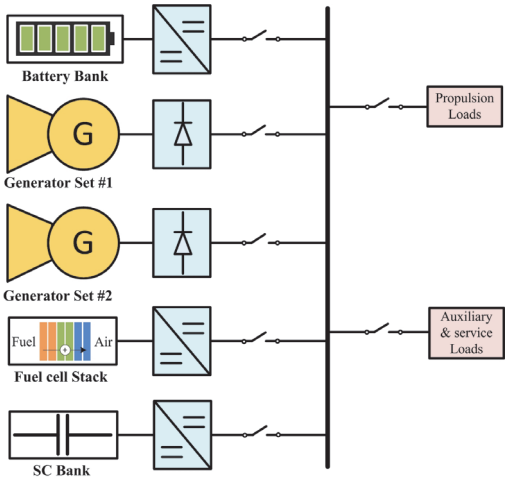

Fig. 2. Simplified single-line diagram of a sectionalized MG in DC-SPS.

In the following part of this section, the major components and the state-of-the-art control solution are introduced.

A. Gensets: The Major Power Sources

In marine applications, gensets composed by prime movers (either diesel engine or gas turbine) and well-proven alternators are the most important power source. So far, diesel engine with synchronous generator (SG) is the mainstream choice for both AC and DC SPSs. Meanwhile, high-speed gas turbine coupled with permanent-magnet generator (PMG) is drawing attention for its better efficiency and reduced volume. In case of DC-SPS application, active or passive rectifier is also mandatory to utilize the power of gensets. Due to industrial concerns of cost and robustness, passive rectifiers are currently more frequently used in present-stage DC-SPSs. It is noteworthy that passive rectifiers cannot achieve decoupled control of output power, which means the mechanical dynamics will affect the transient of DC-SPS. Therefore, it is necessary to model the mechanical part while analyzing DC-SPSs. In this paper, mature generator models provided by SimPowerSystem is employed, while the mechanical part is approximately modeled by conventional PID controller, actuator and engine delay [29], [30], formulated as:

$$T_m(s) = \frac{K_{act}}{1+\tau_{act}s} \times K_{de}e^{-\tau_{de}s} \times Y(s) \tag{1}$$

$$\tau_{act} \approx 0.9/2\pi n \qquad \tau_{de} \approx 1/2nN \tag{2}$$

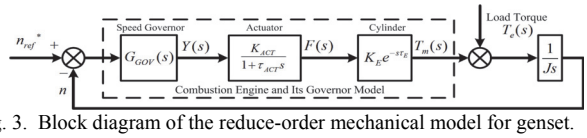

Fig. 3. Block diagram of the reduce-order mechanical model for genset.

Copyright (c) 2017 IEEE. Personal use is permitted. For any other purposes, permission must be obtained from the IEEE by emailing pubs-permissions@ieee.org.

This is the author's version of an article that has been published in this journal. Changes were made to this version by the publisher prior to publication.
The final version of record is available at http://dx.doi.org/10.1109/TII.2017.2772343

where T_m is the mechanical torque, K_{act} is the actuator gain, K_{de} is the engine torque gain, J is moment of inertia, n is rotating speed of the coaxial structure and N is the number of cylinders.

In case of using diode rectifier, a comprehensive steady-state analysis of its output characteristic when connected to a voltage controlled bus has been made in [30]. In the practical operation, diode rectified SG will typically work in commutation mode, in which an approximated linear relationship between output power and bus voltage is reported and analyzed in [31] and [32], the average value function is given as:

$$V_{dc} = \frac{3\sqrt{3}}{\pi} V_m - \frac{3}{\pi} \omega_e L_{ac} I_{dc} \tag{3}$$

where V_m is the peak value of phase voltage, ω_e is the electrical angular speed, L_{ac} is the AC side inductance (i.e. synchronous inductance of the SG), I_{dc} is the average value of output current.

B. Excitation Control Scheme: State-of-the-art Solution

Excitation based control is a cost-effective state-of-the-art solution for bus voltage regulation in DC-SPSs [22], [33]. It can be regarded as a variant of the automatic voltage regulator from AC applications in DC-SPS. The control principle is to adjust output voltage of SG by controlling the excitation current [33]. Detailed control principle can be formulated as following:

$$\begin{cases} V_{qs} = R_{qs} I_{qs} + \omega_e L_{ds} I_{ds} + \omega_e L_m I_f \\ V_{ds} = R_{ds} I_{ds} - \omega_e L_{qs} I_{qs} \end{cases} \tag{4}$$

$$V_m = \sqrt{V_{ds}^{\ 2} + V_{qs}^{\ 2}}\Big|_{I_{ds}=I_{qs}=0} = \omega_e L_m I_f = \omega_e \psi_f$$

$$V_{dc} = \frac{3\sqrt{3}}{\pi} \omega_e \psi_f + \frac{3\sqrt{3}}{\pi} \omega_e \delta\psi - \frac{3}{\pi} \omega_e L_s I_{dc} \tag{5}$$

$$\delta\psi = K_p^{ex}\left(V_{ref}^* - V_{dc}\right) + K_i^{ex} \int \left(V_{ref}^* - V_{dc}\right) dt \tag{6}$$

where ψ_f is the excitation flux established by exciter; L_m is the magnetizing inductance of the SG; I_{ds}, I_{qs}, L_{ds}, L_{qs} are the stator current and inductance components expressed in d-q reference frame, respectively; I_f is the excitation current.

Although excitation control scheme is easy to implement in the real-world engineering, its drawbacks are also noteworthy. Firstly, the control bandwidth of excitation control is limited, which is a considerable problem due to the highly dynamic load conditions of marine vessels. Secondly, the control scheme will not provide damping effect to the measurement errors among paralleled gensets. Therefore, the measurement error of bus voltage can lead to inappropriate power sharing among gensets, which can result in overloading and idling. Last but not least, it is also noteworthy that excitation control solution is inherently impossible to work with PMG.

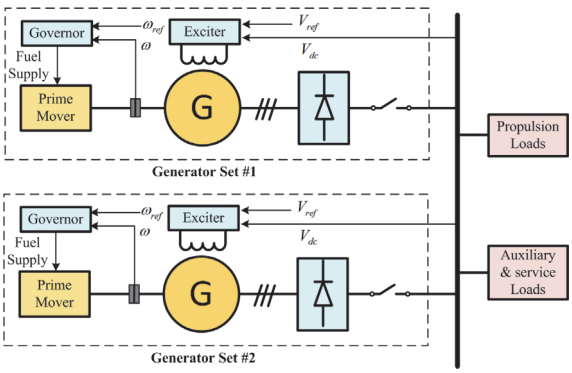

Fig. 4. An illustration of excitation control scheme

C. Onboard Energy Storage System

During the recent decades, the energy storage and associated technologies have received a substantial increase in attention. In marine applications, battery takes an overwhelming majority of the existing shipboard ESSs, growing steadily because of its ever-improving performance. Meanwhile, super-capacitor (SC) based ESSs are also gaining population in short-term power-intensive or repetitive applications. In addition, flywheels are also considered for its power density and inherent resistance to humid operating environment. Even though, their installation and operation need to be done in pairs thus compensating the mechanical effect on the vessel's balancing.

One of the major challenges for shipboard ESSs is that the marine applications have high requirements on both peak power and capacity, which is usually neither technically easy nor economically efficient to be fulfilled simultaneously by any single type of storage. Therefore, HESS is a potential solution to this problem; however, it will leave a challenging task to the power and energy management of the system.

D. Alternative Power Sources: FC and PV Array

Recently, alternative power sources have been considered to be installed aboard a ship to reduce the cost and emission. FCs have been installed aboard several prototype vessels to provide cleaner power source. There are also conceptual designs using PV array to fully or partially power the onboard equipment. The noteworthy problem is that the dynamic power response of a FC is far slower than other kinds of electrical power sources, whereas the PV array is intermittent source with inherent uncertainty. For this reason, it is necessary to install FCs and PV array coupled with ESS and therefore meet the requirement of power availability.

III. Proposed Hierarchical Control Design for DC-SPS

Droop-based hierarchical control architecture is currently the state-of-the-art control solution in the field of terrestrial DC MGs and other similar systems [23]-[28]. In Fig. 5, the physical model of typical droop-based hierarchical control architecture is illustrated. The three control layers are defined as following [23]: (1) Primary Control: the control layer focusing on proper power sharing among generation units; (2) Secondary Control: the control layer that focusing on power quality issue (mainly bus voltage in DC MG) of the system; (3) Tertiary Control: the control layer that focusing on power/energy management and optimization of the system. Although hierarchical control is an advanced comprehensive solution, it may not be suitable to implement in DC-SPS directly. The major problem is that the conventional voltage droop method is not recommended in diesel-dominant systems, because the fuel efficiency of genset is not constant. On the contrary, the optimal fuel efficiency will only appear at a certain operating point around 80%-90% of the

Copyright (c) 2017 IEEE. Personal use is permitted. For any other purposes, permission must be obtained from the IEEE by emailing pubs-permissions@ieee.org.

This is the author's version of an article that has been published in this journal. Changes were made to this version by the publisher prior to publication.
The final version of record is available at http://dx.doi.org/10.1109/TII.2017.2772343

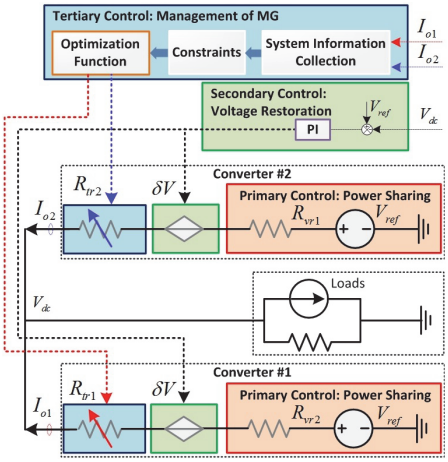

Fig. 5. Illustration of hierarchical control architecture in terrestrial DC MGs.

rated power, and degrades considerably in both light and heavy load conditions [2]. Moreover, the load fluctuations will also increase the fuel consumption and introduce mechanical issues. In addition to that, the limited controllability will be another major challenge. It is noteworthy that the control bandwidth of excitation control is very limited, nevertheless, the situation can be even worse if PMGs coupled with diode rectifier are used (as recommended in [1]).

In order to resolve the aforementioned problems, especially to overcome the limited controllability, the concept of inverse-droop control method is proposed in this paper. Based on the new proposal, a hierarchical control design is presented. The detailed method and implementation are shown as following parts of this section.

A. Proposed Methods: Cooperative Inverse-droop Control

The conventional droop control method is typically used as the primary control level of hierarchical control architecture. Its control effect is to add a virtual resistance (VR), thus achieving properly power sharing effect among all the power sources in droop control mode (DCM). The principle is formulated as:

$$V_{dc} = V_{ref}^{*} - R_{vri} I_{oi} \tag{7}$$

or linearized as follows, which is also widely used:

$$V_{dc} = V_{ref}^{*} - m_i P_{oi} \quad m_i = R_{vri}/V_{nom} \quad \text{when} \quad V_{dc} \approx V_{nom} \tag{8}$$

where R_{vri} is the VR of the ith converter, I_{oi} is the output current of the ith converter, P_{oi} is the output power of the ith converter, V_{ref}^{*} is the voltage reference, V_{nom} is the nominal voltage, m_i is named as droop coefficient or power droop coefficient.

When compared with more conventional voltage control mode (VCM) and current control mode (CCM), DCM shows swing characteristic. In practical works, DCM sources are usually achieved by conventional VCM controller with voltage reference determined by (7). The equation clearly shows the mechanism of DCM; however, it can be also deformed into the following form:

$$I_{oi} = \frac{1}{R_{vri}}\left(V_{ref}^{*} - V_{dc}\right) \quad \text{or} \quad P_{oi} = \frac{1}{m_i}\left(V_{ref}^{*} - V_{dc}\right) \tag{9}$$

Equation (9) reveals the hidden side of DCM sources instead of conventional understanding (i.e. controlled voltage source). It shows that DCM sources can be identified as controlled current/power sources with respond to the voltage deviation. If the voltage deviation is determined, the output of DCM source will be accordingly determined, vice versa. It also indicates the possibility to coordinate the output power of DCM sources by controlling the voltage deviation (i.e. intentional control of bus voltage), which is defined as inverse-droop control method. For a determined amount of output power, the voltage reference can be calculated by:

$$V_{dc}^{*} = \frac{1}{2}\left(V_{ref}^{*} + \sqrt{V_{ref}^{*\,2} - 4R_{eq}P_{ref}}\right) \quad R_{eq} = 1\Big/\sum_{i=1}^{n}\left(\frac{1}{R_{vri}}\right) \tag{10}$$

$$V_{dc}^{*} = V_{ref}^{*} - m_{eq}P_{ref} \quad m_{eq} = 1\Big/\sum_{i=1}^{n}\left(\frac{1}{m_i}\right) \tag{11}$$

where R_{eq} is the equivalent resistance of the system, m_{eq} is the equivalent power droop coefficient of the system, P_{ref} is the total amount output power, V_{dc}^{*} is the calculated reference.

In Fig. 6, the equivalent circuits of more conventional droop method and inverse-droop method are illustrated. In an inverse-droop based system, the proportional power sharing effect among DCM sources is maintained. Meanwhile, the entire system will still be well-damped for measurement error if there is only one source operating in VCM to clamp the bus voltage. However, the differences are noteworthy. In inverse-droop based system, the voltage is regulated directly instead of floating, therefore, DCM sources are behaving more in CCM side. Meanwhile, the VCM source is providing controllability to the whole system, while the DCM sources are providing power and damping effect. Conclusively, from the perspective of functionality, power sources are symmetrical in droop method, whereas they are asymmetrical but cooperative in the proposed inverse-droop method.

In case of using diode rectified gensets, their inherent droop characteristic presented in (3) can be also generalized in the same form as (7), and therefore following the same principle in both sides. By assuming that excitation current is constant (i.e. regarding the SG as PMG), the relationship in (11) is deformed as following to describe the behavior in different operation points of the alternator:

$$V_{dc} = \left(\omega_{ei}/\omega_{base}\right)\left[V_{base} - m_{basei}P_{oi}\right] \quad \text{where} \quad m_{basei} = m_i\big|_{\omega_e=\omega_{base}} \tag{12}$$

where ω_{ei} is the rotational speed of ith genset, ω_{base} is the base speed for calculation, P_{oi} is the output power of the ith genset, V_{base}^{*} is the open-circuit voltage in base speed.

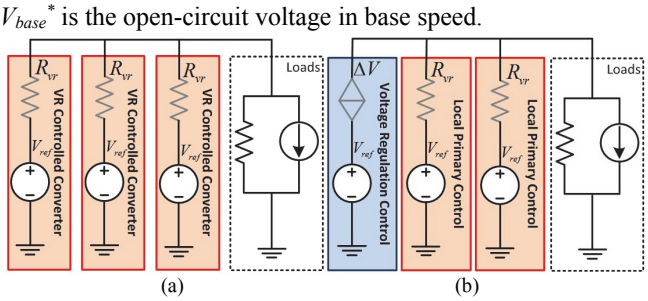

Fig. 6. Equivalent circuit of droop and inverse-droop methods: (a) droop method; (b) proposed inverse-droop method.

Copyright (c) 2017 IEEE. Personal use is permitted. For any other purposes, permission must be obtained from the IEEE by emailing pubs-permissions@ieee.org.

This is the author's version of an article that has been published in this journal. Changes were made to this version by the publisher prior to publication.
The final version of record is available at http://dx.doi.org/10.1109/TII.2017.2772343

From the viewpoint of DC-SPS, the benefits of proposed inverse-droop control method are very considerable. Firstly, the load fluctuations will be naturally absorbed by VCM source, so that the DCM sources can work in constant load condition, moreover, the operation point is fully adjustable. In this case, VCM source will automatically provide supporting functions to the system, including spinning reserve, peak-shaving, and load conditioning. It is important to notice that these supporting functions are exactly the same with the expected functions of using ESSs in SPSs as listed in [2]. In another word, the new proposal provides an effective method to integrate ESSs in DC-SPS and to exploit the benefit. Secondly, when compared with conventional methods, the regulation of bus voltage can benefit from the higher control bandwidth and faster dynamic response with the help of controllable PEC. Thirdly, in the new proposal, the controllable PECs (as VCM sources) can be used to coordinate operation of DCM sources (e.g. diode rectified gensets), thus exploiting the complementary advantages. It also makes it possible to use PMGs with simple diode rectifier as power source, which can reduce the cost and volume of the generating units.

B. Proposed Methods: Frequency-division Control Method as An Extension to Inverse-droop Control

As mentioned in Section II, HESS is a potential solution to meet the high requirement on both power and energy densities instead of centralized ESS in shipboard applications. However, it will also introduce a challenge to the control and management, because the complexity will increase dramatically. In addition to that, the introduction of HESS in the proposed inverse-droop control method requires additional control design, otherwise it will introduce paralleled VCM source without enough damping resistance. For these reasons, additional control methods are worthy and necessary to be introduced into proposed inverse-droop control method to make it compatible with HESS and benefits from HESS's advantage.

Since the initial intention of using HESS is to take the complementary advantage in power and energy densities, the power sharing among different ESSs should be compliance with their diverse nature of dynamic response rather than capacity or power rating. SCs can provide good performance in high-power or repetitive applications. Batteries, on the other hand, are much better in long-term power support with limited dynamics. From the perspective of frequency domain, the asymmetrical power sharing effect of inverse-droop method can be regarded as dividing the load power into baseline power ($f=0$) and power fluctuations ($f>0$), and only baseline power is shared among DCM sources. One step further, the power fluctuations can be subdivided into low-frequency part and high-frequency part. These two parts can be taken by batteries and SCs, respectively, thus making them cooperative in the dynamic power sharing.

In order to subdivide the power fluctuations cooperatively, the simplest method is to insert paired low-pass and high-pass filters into the inner-loop controllers, thus differentiating the dynamic response of different ESSs. With effective frequency-division design, the system can spontaneously employ the

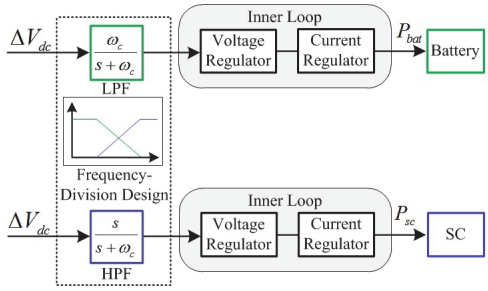

Fig. 7. Frequency-division design for inverse-droop control with HESS.

complementary advantage from HESS without interventions from management level. Moreover, the stability issue can be also overcome, because the measurement error (especially the static component) will be filtered by high-pass filter, thus avoiding unwanted incremental currents. In addition to that, it is noteworthy that with the proposed frequency-division control method together with inverse-droop method, the characteristic-based power sharing can be achieved among different sources.

C. Proposed Methods: Higher Levels of Hierarchical Control Design

In addition to the control and coordination of multiple power sources, the medium-/long-term management of fuel efficiency is equally important in the practical operation of DC-SPS due to the "pay-per-used" nature of diesel generation. Meanwhile, the zonal-level subsystems should be able to merge as entirety, thus secondary control of bus voltage is needed. In this case, higher levels control methods are introduced on the basis of proposed power-sharing level control methods in the earlier discussion.

1) Management Level Control

For SPSs, the management level control of power generation typically includes two control activities, i.e. the management of the number of running gensets and the optimization of the fuel efficiency of the running gensets. With the presence of ESSs in DC-SPS, it is possible to perform on/off control of gensets according to the state-of-charge of battery based ESSs. For this reason, the discussion of management level control in this paper focus more on the methods of realizing desired fuel efficiency. The fuel efficiency of a genset is related to many different variables, including the load torque, engine speed, air temperature, coolant temperature, atmospheric pressure, etc. As an empirical conclusion, in a standard test environment, the optimal fuel efficiency will appear when the output is 80%-90% of the rated torque/load and it will vary according to the engine speed. An approximated fuel efficiency calculation function is established and detailed in the Appendix.

In terrestrial MGs, the power management level control is usually related to adjusting the VR of source converters, and therefore manage their output power. However, the droop coefficient of diode rectifier is determined by equation (3) and it cannot be intentionally adjusted. Thus, the conventional VR based method for system management need to be changed. With the proposed inverse-droop control method, the outputs of gensets are determined by the voltage deviation as shown in (9). It indicates that the power management can be also achieved by introducing additional adjustable voltage deviation to different sources to achieve desired outputs. To realize that, simple PI

Copyright (c) 2017 IEEE. Personal use is permitted. For any other purposes, permission must be obtained from the IEEE by emailing pubs-permissions@ieee.org.

This is the author's version of an article that has been published in this journal. Changes were made to this version by the publisher prior to publication.
The final version of record is available at http://dx.doi.org/10.1109/TII.2017.2772343

controller can be used, as shown in (13). In practical work, the voltage deviation can be generated by excitation regulator, as shown in (14).

$$\begin{cases} P_{oi} = \left(V_{ref}^{*} - V_{dc} + \delta V_i\right)/m_i \\ \delta V_i = K_p^{ML}\left(P_{oi}^{*} - P_{oi}\right) + K_i^{ML}\int\left(P_{oi}^{*} - P_{oi}\right)dt \end{cases} \tag{13}$$

$$\delta V_i = K_p^{ML}\left(P_{oi}^{*} - P_{oi}\right) + K_i^{ML}\int\left(P_{oi}^{*} - P_{oi}\right)dt = \frac{3\sqrt{3}}{\pi}\omega_e \delta\psi_i \tag{14}$$

2) Voltage Restoration Level Control

In terrestrial MGs, voltage restoration control is working as secondary control to compensate the voltage drop introduced by droop method. However, this control level is hardly reported in the field of DC-SPS. It is mainly because that shipboard equipment is required to be able to work within a wide range of DC bus voltage. Yet, this control level will be necessary to achieve system-level interconnection [34].

To proceed voltage restoration function, a global offset will be needed to the original open-circuit voltage setting, thus the desired power sharing function can be maintained. To generate the global offset, additional PI controller can be used and added into the proposed control scheme as an independent level to its lower control levels. It is also noteworthy that the PI controller need to be relatively slow to avoid conflicting with other control levels. Ultimately, the comprehensive control diagram of proposed hierarchical control design is shown in Fig. 8.

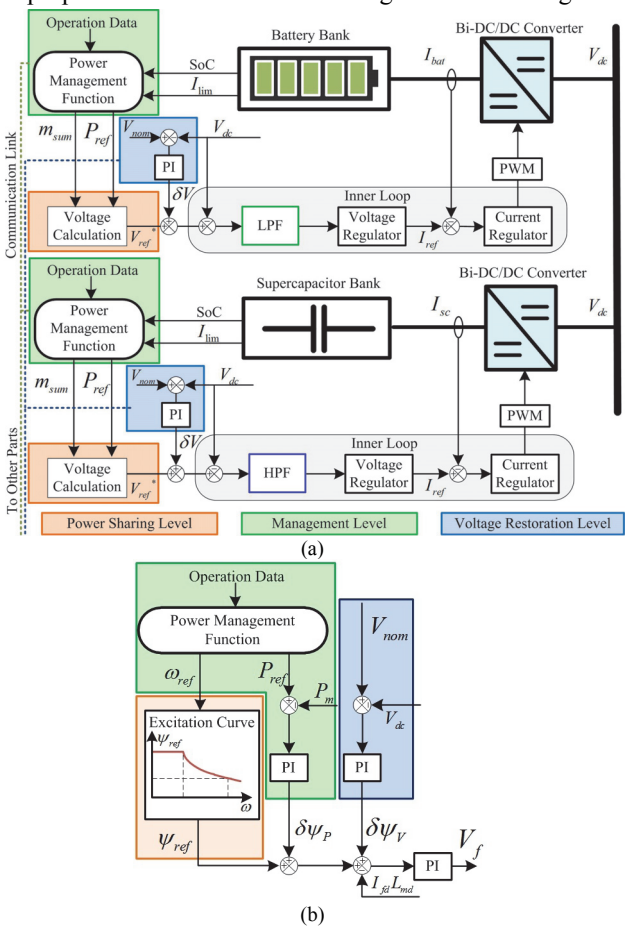

Fig. 8. Implementation of proposed hierarchical control design in different controllers: (a) in ESS controllers; (b) in excitation regulator.

IV. Real-time Simulation Results

In order to validate the methods presented in this paper, real-time simulations in detailed switching level are carried out with Opal-RT real-time simulator. A notional DC-SPS with the same configuration as shown in Fig. 2 is used as the study case. The parameters of each component and corresponding control loops are as shown in TABLE I. To compare the performance of proposed method with more conventional droop based control method, simulations of the same study case are also carried out using droop method, which is shown in Fig. 9 with detailed parameters in TABLE I.

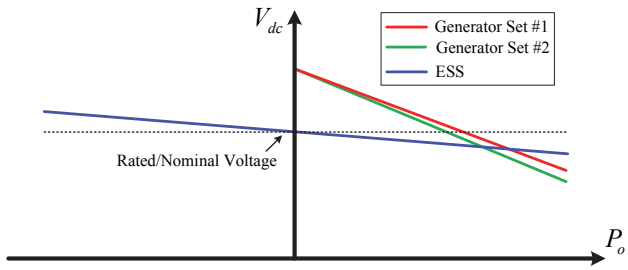

Fig. 9. Illustration of droop control method used for comparison.

Two operating scenarios are set to verify proposed methods. In the first scenario, the load condition is set to emulate the acceleration process, in which the propulsion load increased from zero to its full power. In the second scenario, the load

TABLE I
Power Stage and Control Parameters

Category	Parameter	Value	Unit
DC Bus	Nominal voltage (range)	1500 (±10%)	V
Gensets	Nominal rotational speed	1800	rpm
	Rated power	330	kW
	Synchronous inductance	0.969	mH
	Rated line voltage (@1800rpm)	1215	Vrms
Battery	Rated capacity	265.2	kWh
	Maximum power (dis-/charge)	390/390	kW
	Switching frequency	1	kHz
SC	Rated capacitance	2200	F
	Rated voltage	288	V
	Maximum capacity	91	MJ
	Switching frequency	10	kHz
FC	Rated power	100	kW
Loads	Rated propulsion power	625	kW
	Auxiliary power	85	kW
Inner-loop Controllers	Battery voltage controller (P/I)	1/125	-
	Battery current controller (P/I)	0.0015/0.20	-
	SC voltage controller (P/I)	10/1000	-
	SC current controller (P/I)	0.0045/0.20	-
	Cut-off frequency of paired filters	5	Hz
Power Sharing Level	Base voltage	1640	V
	Base rotational speed	1800	rpm
	Base droop coefficient	0.5	V/kW
Management Level	Notional optimal operation point 1	300/1800	kW/rpm
	Notional optimal operation point 2	260/1700	kW/rpm
	Voltage deviation controller (P/I)	0.5/5	-
Voltage Restoration Level	Voltage restoration controller (P/I)	0.1/10	-
ESS Droop Control	Initial voltage reference	1500	V
	Droop coefficient	0.3	V/kW

Copyright (c) 2017 IEEE. Personal use is permitted. For any other purposes, permission must be obtained from the IEEE by emailing pubs-permissions@ieee.org.

This is the author's version of an article that has been published in this journal. Changes were made to this version by the publisher prior to publication.
The final version of record is available at http://dx.doi.org/10.1109/TII.2017.2772343

condition is set to emulate the DP process of vessel, in which the propulsion power performs a fast periodical change, and therefore verifying the performance of proposed control methods. Simulations are carried out with conventional droop method (for comparison) and the proposed hierarchical control design with centralized ESS (using battery) and HESS (using frequency-division method), respectively, as a comparative study. The simulation results of the two scenarios with these control methods are shown in the following parts.

A. Scenario 1: Full-Load Acceleration Process

In this simulation scenario, a notional full-load operation is emulated, including initializing of the system followed by an acceleration process. In Fig. 10, the simulation results of droop-controlled operation is shown. In Fig. 12 and Fig. 14, the results using proposed method with centralized ESS and HESS are detailed. The simulation scenario can be divided into the following stages:

1) Stage 1 (0-t_1): In this stage, the grid-forming process is emulated. The bus voltage is initialized by ESS in this stage. Meanwhile, the genset #1 accelerates from idle speed to its rated speed to supply power in the next stage.

2) Stage 2 (t_1-t_2): At t_1, genset #1 is connected to supply power and the propulsion load starts increasing to maximum. The voltage reference decreases as response of power sharing level. In droop based approach, the droop coefficient is set to make the output of a single genset equal to 85% of its rated power (280kW) at a full load condition. In the proposed method, the power reference is also set to be 280kW.

3) Stage 3 (t_2-t_3): At the start of this stage, the management level is activated, and gradually updating the power reference.

4) Stage 4 (t_3-t_4): The state of charge of battery falls below the threshold and triggers on/off management. At t_3, genset #2 accelerates from idle speed and connected into the system. The management level optimizing the operation point after reaching steady state, including both output power and rotational speed.

5) Stage 5 (t_4-$20s$): At t_4, the proposed voltage restoration level control is activated, the DC bus voltage is gradually restored to its rated value (i.e. 1500V).

B. Scenario 2: DP Process

In this simulation scenario, the propulsion load is set to be changing between 25% and 100% periodically, instead of being constant, to emulate the highly dynamic load behavior in a DP process. The simulation results are shown in Fig. 11, 13 and 15. This scenario can be divided into the following stages:

1) Stage 1 (0-t_1): The same grid-forming as scenario 1 is performed in this stage to initialize the system.

2) Stage 2 (t_1-t_2): In this stage, the loads are supplied by genset #1 and ESSs, the peak-shaving function is performed.

3) Stage 3 (t_2-t_3): During this stage, the management level starts to optimize the operation of genset #1 to its optimum.

4) Stage 4 (t_3-t_4): At t_3, the on/off management is executed. Genset #2 is connected into the system after acceleration. Afterwards, the management level adjusted its operation point.

5) Stage 5 (t_4-$20s$): At t_4, the proposed voltage restoration level control is activated, and DC bus voltage starts to be restored to its rated value (i.e. 1500V).

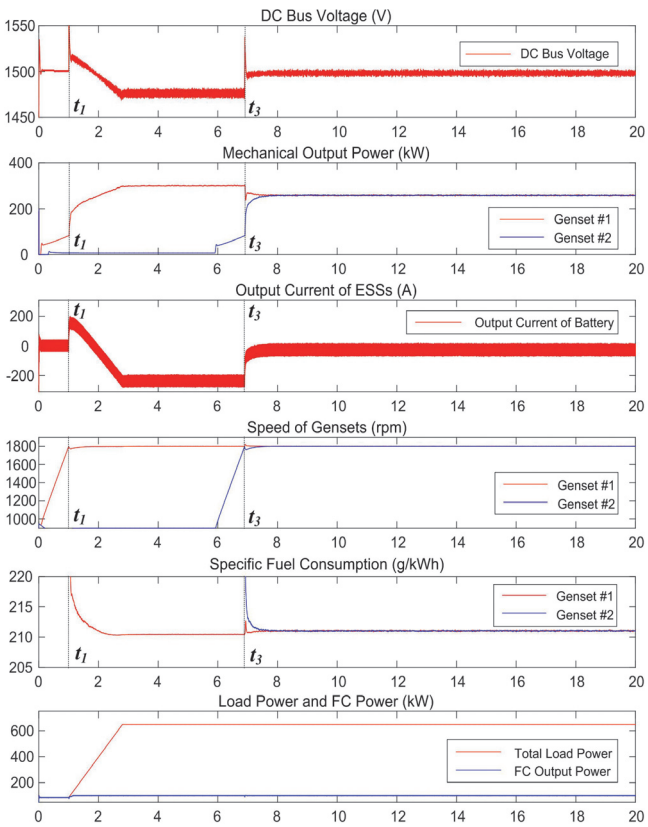

Fig. 10. Simulation results of scenario 1 using conventional droop control method.

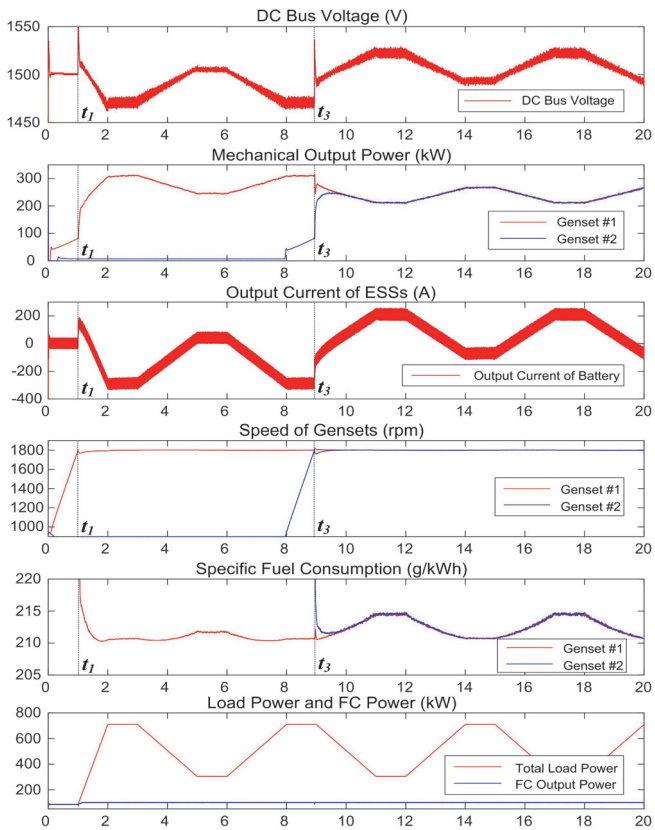

Fig. 11. Simulation results of scenario 2 using conventional droop control method.

Copyright (c) 2017 IEEE. Personal use is permitted. For any other purposes, permission must be obtained from the IEEE by emailing pubs-permissions@ieee.org.

This is the author's version of an article that has been published in this journal. Changes were made to this version by the publisher prior to publication.
The final version of record is available at http://dx.doi.org/10.1109/TII.2017.2772343

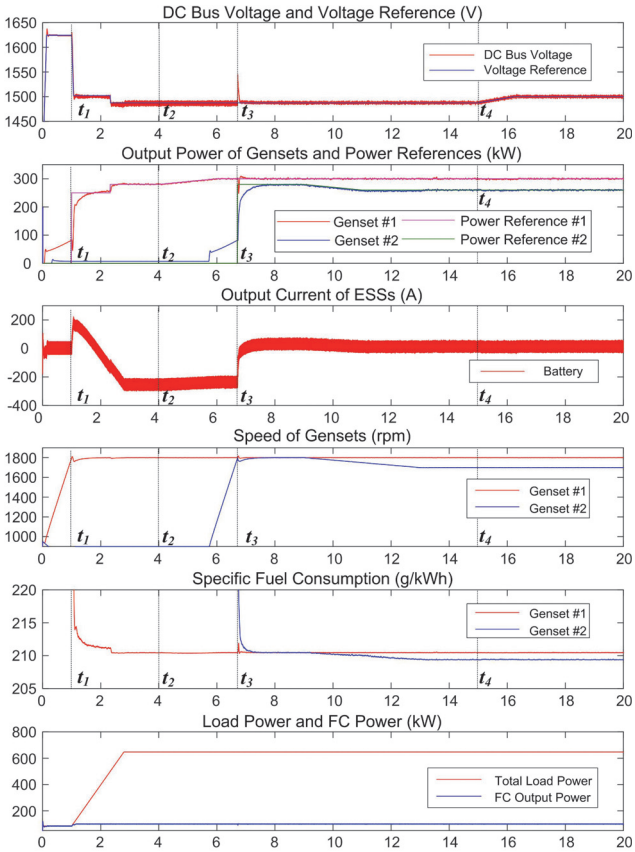

Fig. 12. Simulation results of scenario 1 using proposed hierarchical control design with centralized ESS.

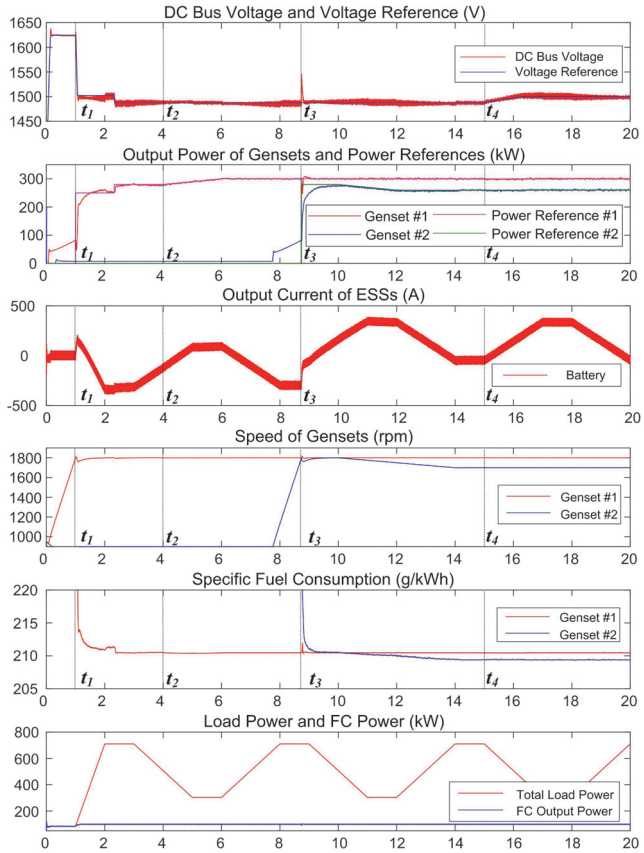

Fig. 13. Simulation results of scenario 2 using proposed hierarchical control design with centralized ESS.

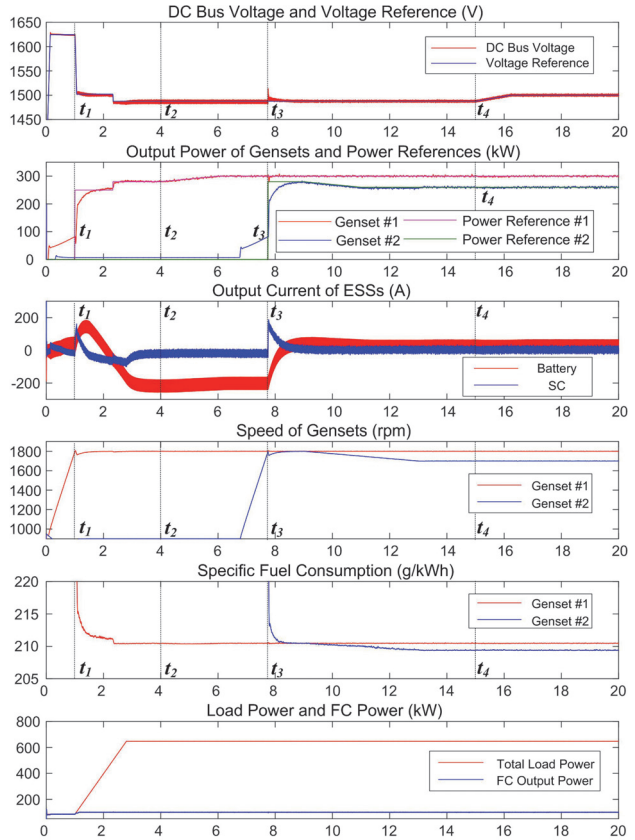

Fig. 14. Simulation results of scenario 1 using proposed hierarchical control design with HESS and frequency-division method.

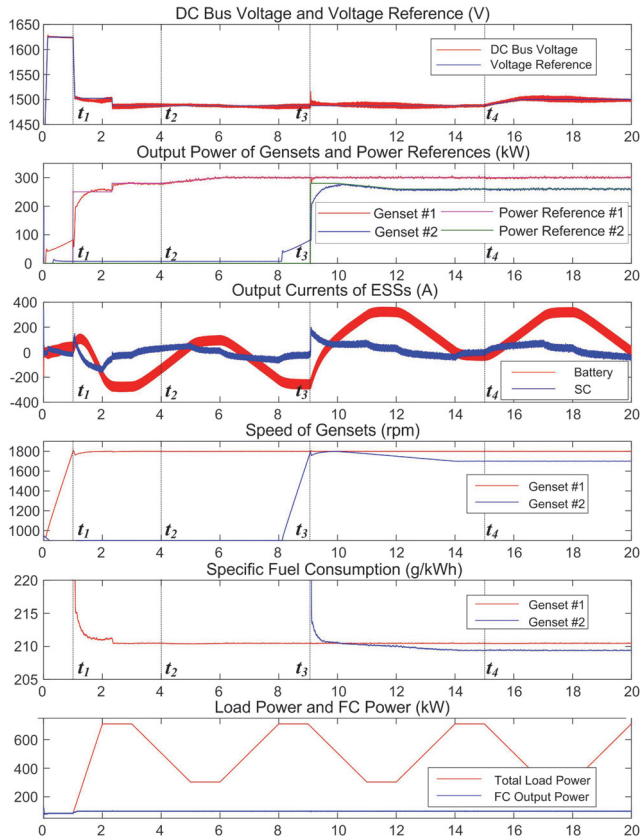

Fig. 15. Simulation results of scenario 2 using proposed hierarchical control design with HESS and frequency-division method.

Copyright (c) 2017 IEEE. Personal use is permitted. For any other purposes, permission must be obtained from the IEEE by emailing pubs-permissions@ieee.org.

This is the author's version of an article that has been published in this journal. Changes were made to this version by the publisher prior to publication.
The final version of record is available at http://dx.doi.org/10.1109/TII.2017.2772343

C. Discussion and Comparison on Simulation Results

From the simulation results, several noteworthy conclusions can be derived. Firstly, from Fig. 10 and Fig. 11, it shows that well-designed droop method can provide an acceptable fuel efficiency in its rated load condition, however, in dynamic load conditions the fuel efficiency will degrade. Secondly, from Fig. 12 and Fig. 13, it shows that the desirable power sharing effect among onboard power sources can be achieved inverse-droop method, regardless of load conditions. It is worthy to notice that these two control methods are realized with exactly the same hardware configuration. In addition, the proposed management level and voltage restoration level functions can be achieved independently. Thirdly, from Fig. 14 and Fig. 15, with the proposed frequency-division method, the battery and SC based ESSs can work cooperatively within the proposed hierarchical control design. The dynamic power sharing is desirable, i.e. the battery is providing long-term power supply with relatively slow dynamic while SC is providing short-term power with a fast response.

Although, the acceptable control effects are achieved with both centralized ESS and frequency-division controlled HESS solutions, there are still noteworthy differences. When compared with battery solution, the voltage regulation using HESS has a faster response and lower overshoot, the impact of connecting genset #2 is also limited. It shows that bus voltage regulation can benefit from the wider control bandwidth and faster response of the SC controller. Moreover, since the power sharing effect of the proposed inverse droop method is also coordinated through voltage regulation in common DC bus, the dynamic power sharing effect will also benefit from such an improvement.

V. Conclusion

In this paper, a hierarchical control design for DC-SPS is presented, the main contributions can be summarized as:

(1) An inverse-droop control approach is proposed as the power sharing strategy for shipboard system and potentially other diesel-dominate applications. With the proposed method, the power sharing between different power sources is according to their different power, energy and/or efficiency characteristics instead of rated power or capacity.

(2) A frequency-division method is proposed as an extension of the inverse-droop method, which is aiming at enabling HESS to exploit its advancements over single storage, as well as solving the internal power management issue of HESS automatically.

(3) Redesigned and re-organized control solutions for higher level control objectives beyond power sharing control are also proposed, thus opening more degree-of-freedom for different scenarios in the real-world operation.

To validate the proposed methods, real-time simulations are carried out with a study case of DC-SPS. Comparison between the proposed control solution and more conventional droop method are presented. The results show that the proposed method has advancement in real-time fuel efficiency and bus voltage regulation over the conventional method.

Appendix: Fuel Efficiency Evaluation Model

The fuel efficiency of marine engine is related to a number of different operating conditions, in which the most important factor is the load torque and engine speed. In this paper, a fuel efficiency evaluation model is established using the operational data of a four-stroke engine with ISO standard rating of 360 kW (330 kW for electrical generation). In this paper, quadratic fit method used in [35] is employed to evaluate the fuel efficiency in real-time simulation, as shown in Fig. 16.

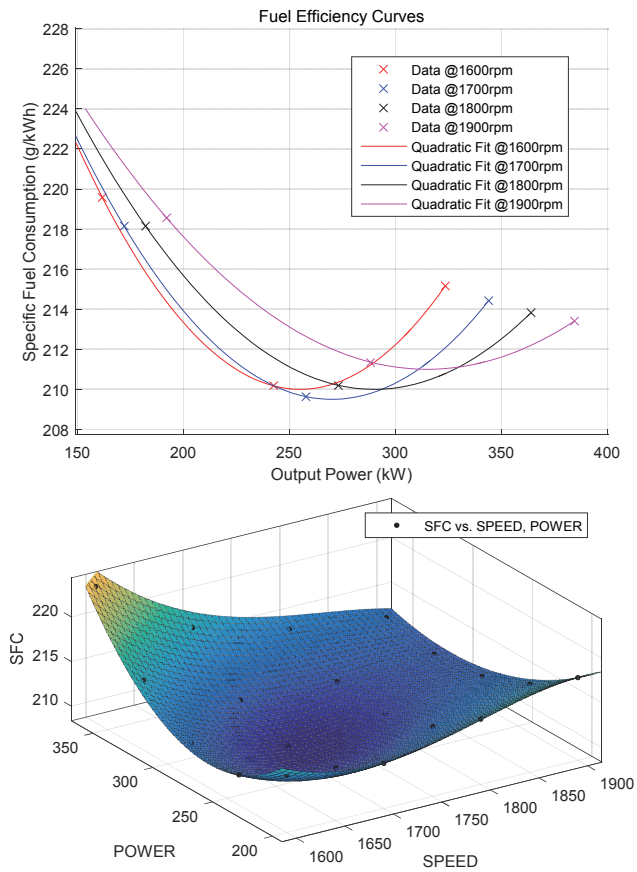

Fig. 16. Fuel efficiency evaluation model

References

[1] IEEE Std 1709-2010 IEEE Recommended Practice for 1 kV to 35 kV Medium-Voltage DC Power Systems on Ships, November. 2010.

[2] J. F. Hansen and F. Wendt, "History and State of the Art in Commercial Electric Ship Propulsion, Integrated Power Systems, and Future Trends," *Proc. IEEE*, vol. 103, no. 12, pp. 2229–2242, Dec. 2015.

[3] E. Skjong, E. Rodskar, M. Molinas, T. A. Johansen, and J. Cunningham, "The Marine Vessel's Electrical Power System: From its Birth to Present Day," *Proc. IEEE*, vol. 103, no. 12, pp. 2410–2424, Dec. 2015.

[4] E. Skjong, R. Volden, E. Rodskar, M. Molinas, T. Johansen, and J. Cunningham, "Past, Present and Future Challenges of the Marine Vessel's Electrical Power System," *IEEE Trans. Transp. Electrif.*, pp. 1–1, April. 2016.

[5] B. Zahedi and L. E. Norum, "Modeling and Simulation of All-Electric Ships with Low-Voltage DC Hybrid Power Systems," *IEEE Trans. Power Electron.*, vol. 28, no. 10, pp. 4525–4537, Oct. 2013.

[6] T. J. McCoy, "Integrated Power Systems—An Outline of Requirements and Functionalities for Ships," in *Proc. IEEE*, vol. 103, no. 12, pp. 2276-2284, Dec. 2015.

[7] N. Doerry, "Next generation integrated power systems (NGIPS) for the future fleet". Presented at IEEE Electric Ship Technologies Symposium

Copyright (c) 2017 IEEE. Personal use is permitted. For any other purposes, permission must be obtained from the IEEE by emailing pubs-permissions@ieee.org.

This is the author's version of an article that has been published in this journal. Changes were made to this version by the publisher prior to publication.
The final version of record is available at http://dx.doi.org/10.1109/TII.2017.2772343

2009. [Online]. Available: http://www.doerry.org/norbert/papers/090305usna-ngips-final-presentation.pdf

[8] N. Doerry and K. McCoy, "Next generation integrated power system: NGIPS technology development roadmap," 2007.

[9] G. Sulligoi, A. Tessarolo, V. Benucci, M. Baret, A. Rebora, and A. Taffone, "Modeling, Simulation, and Experimental Validation of a Generation System for Medium-Voltage DC Integrated Power Systems," *IEEE Trans. Ind. Appl.*, vol. 46, no. 4, pp. 1304–1310, 2010.

[10] Z. Jin, G. Sulligoi, R. Cuzner, L. Meng, J. C. Vasquez and J. M. Guerrero, "Next-Generation Shipboard DC Power System: Introduction Smart Grid and dc Microgrid Technologies into Maritime Electrical Netowrks," *IEEE Electrific. Mag.*, vol. 4, no. 2, pp. 45-57, June 2016.

[11] R. M. Cuzner and D. A. Esmaili, "Fault tolerant shipboard MVDC architectures," in *2015 International Conference on Electrical Systems for Aircraft, Railway, Ship Propulsion and Road Vehicles (ESARS)*, 2015, vol. 2015-May, pp. 1–6.

[12] A. Monti, S. D'Arco, L. Gao, and R. A. Dougal, "Energy storage management as key issue in control of power systems in future all electric ships," *2008 Int. Symp. Power Electron. Electr. Drives, Autom. Motion*, pp. 580–585, 2008.

[13] S. Y. Kim, S. Choe, S. Ko and S. K. Sul, "A Naval Integrated Power System with a Battery Energy Storage System: Fuel efficiency, reliability, and quality of power" *IEEE Electrific. Mag.*, vol. 3, no. 2, pp. 22-33, June 2015.

[14] G. Sattler, "Fuel cells going on-board", in *Journal of power sources*, vol. 86, no. 1. pp. 61-67, March 2000.

[15] A. Hasanzadeh, C. S. Edrington, N. Stroupe and T. Bevis, "Real-Time Emulation of a High-Speed Microturbine Permanent-Magnet Synchronous Generator Using Multiplatform Hardware-in-the-Loop Realization," in *IEEE Trans. Ind. Electron*, vol. 61, no. 6, pp. 3109-3118, June 2014.

[16] S. Z. Vijlee, A. Ouroua, L. N. Domaschk and J. H. Beno, "Directly-Coupled Gas Turbine Permanent Magnet Generator Sets for Prime Power Generation On Board Electric Ships," *2007 IEEE Electric Ship Technologies Symposium*, Arlington, VA, 2007, pp. 340-347.

[17] X. J. Tang, T. Wang, C. Zhi, and Y. M. Huang, "The design of power management system for solar ship," *ICTIS 2015 - 3rd Int. Conf. Transp. Inf. Safety, Proc.*, pp. 548–553, 2015.

[18] R. E. Hebner, K. Davey, J. Herbst, D. Hall, J. Hahne, D. D. Surls, and A. Ouroua, "Dynamic Load and Storage Integration," *Proc. IEEE*, vol. 103, no. 12, pp. 2344–2354, 2015.

[19] F. Wang, Z. Zhang, T. Ericsen, R. Raju, R. Burgos and D. Boroyevich, "Advances in Power Conversion and Drives for Shipboard Systems," in *Proc. IEEE*, vol. 103, no. 12, pp. 2285-2311, Dec. 2015.

[20] R. Mo, R. Li and H. Li, "Isolated modular multilevel (IMM) DC/DC converter with energy storage and active filter function for shipboard MVDC system applications," *Electric Ship Technologies Symposium (ESTS), 2015 IEEE*, Alexandria, VA, 2015, pp. 113-117.

[21] R. M. Cuzner, V. Singh, M. Rashidi and A. Nasiri, "Converter topological and solid state protective device trade-offs for future shipboard MVDC systems," *Electric Ship Technologies Symposium (ESTS), 2015 IEEE*, Alexandria, VA, 2015, pp. 34-39.

[22] G. Sulligoi, A. Tessarolo, V. Benucci, A. Millerani Trapani, M. Baret and F. Luise, "Shipboard Power Generation: Design and Development of a Medium-Voltage dc Generation System," *IEEE Ind. Appl. Mag.*, vol. 19, no. 4, pp. 47-55, July-Aug. 2013.

[23] J. M. Guerrero, J. C. Vasquez, J. Matas, L. G. De Vicuña, and M. Castilla, "Hierarchical control of droop-controlled AC and DC microgrids - A general approach toward standardization," *IEEE Trans. Ind. Electron.*, vol. 58, no. 1, pp. 158–172, 2011.

[24] J. M. Guerrero, M. Chandorkar, T. Lee, and P. C. Loh, "Advanced Control Architectures for Intelligent Microgrids; Part I: Decentralized and Hierarchical Control," *IEEE Trans. Ind. Electron.*, vol. 60, no. 4, pp. 1254–1262, 2013.

[25] J. M. Guerrero, P. C. Loh, T. L. Lee, and M. Chandorkar, "Advanced control architectures for intelligent microgridsPart II: Power quality, energy storage, and AC/DC microgrids," *IEEE Trans. Ind. Electron.*, vol. 60, no. 4, pp. 1263–1270, 2013.

[26] X. Lu, J. M. Guerrero, K. Sun, J. C. Vasquez, R. Teodorescu and L. Huang, "Hierarchical Control of Parallel AC-DC Converter Interfaces for Hybrid Microgrids," in *IEEE Trans. Smart Grid*, vol. 5, no. 2, pp. 683-692, March 2014.

[27] Y. Wang, S. Mao and R. M. Nelms, "On Hierarchical Power Scheduling for the Macrogrid and Cooperative Microgrids," in *IEEE Trans. Industrial Informatics*, vol. 11, no. 6, pp. 1574-1584, Dec. 2015.

[28] A. Vaccaro, V. Loia, G. Formato, P. Wall and V. Terzija, "A Self-Organizing Architecture for Decentralized Smart Microgrids Synchronization, Control, and Monitoring," in *IEEE Transactions on Industrial Informatics*, vol. 11, no. 1, pp. 289-298, Feb. 2015.

[29] Y. Khersonsky and G. Sulligoi, "Standards for Ships and Oil Platforms: A Review of the Latest from the IEEE and IEC," in *IEEE Industry Applications Magazine*, vol. 22, no. 1, pp. 20-27, Jan.-Feb. 2016.

[30] G. M. Foglia, A. Di Gerlando, M. F. Iacchetti, and R. Perini, "Comprehensive steady-state analytical model of a three-phase diode rectifier connected to a constant DC voltage source," *IET Power Electron.*, vol. 6, no. January, pp. 1927–1938, 2013.

[31] P. C. Krause, O. Wasynczuk, and S. D. Sudhoff, Analysis of Electric Machinery and Drive Systems, 2nd ed. Piscataway, NJ: IEEE Press, 2002.

[32] Sudhoff, S., Pekarek, S., Glover, S., Zak, S. et al., "Stability Analysis of a DC Power Electronics Based Distribution System," SAE Technical Paper 2002-01-3184, 2002, doi:10.4271/2002-01-3184.

[33] B. Zahedi and L. E. Norum, "Voltage regulation and power sharing control in ship LVDC power distribution systems," *Power Electronics and Applications (EPE), European Conference on*, Lille, 2013, pp. 1-8.

[34] L. Meng, T. Dragicevic, J. M. Guerrero, and J. C. Vasquez, "Optimization with system damping restoration for droop controlled DC/DC converters," *IEEE Energy Convers. Congr. Expo. ECCE 2013*, pp. 65–72, 2013.

[35] Bijan Zahedi, Lars E. Norum, Kristine B. Ludvigsen, Optimized efficiency of all-electric ships by dc hybrid power systems, *Journal of Power Sources*, vol. 255, 2014, Pages 341-354, ISSN 0378-7753, http://dx.doi.org/10.1016/j.jpowsour.2014.01.031.

Zheming Jin (S'15) received the B.S. in Electrical Engineering and M.S. degree in Power Electronics and AC Drive from Beijing Jiaotong University, Beijing, China, in 2013 and 2015, respectively. He is currently working towards his Ph.D degree in Power Electronic Systems at Department of Energy Technology, Aalborg University, Denmark. His research interests include control of power electronic converters, stability of power electronic systems, energy storage, dc microgrids and its applications in transportation electrification.

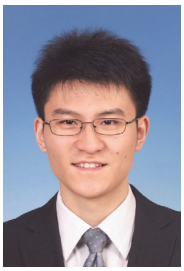

Lexuan Meng (S'13, M'15) received the B.S. degree in Electrical Engineering and M.S. degree in Electrical Machine and Apparatus from Nanjing University of Aeronautics and Astronautics (NUAA), Nanjing, China, in 2009 and 2012, respectively. In 2015, he received the Ph.D. degree in Power Electronic Systems from Department of Energy Technology, Aalborg University, Denmark. He is currently a post-doctoral researcher in the same department working on flywheel energy storage and onboard electric power systems. His research interests include microgrids, grid integration of energy storage systems, power quality and distributed control.

Dr. Meng serves as the Guest Associate Editor of the Special Issue entitled "Structured DC Microgrids" in the IEEE Journal of Emerging and Selected Topics in Power Electronics. He is a member of IEEE Power Electronics Society (PELS), Industry Applications Society (IAS), Power and Energy Society (PES) and Industrial Electronics Society (IES).

Josep M. Guerrero (S'01-M'04-SM'08-FM'15) received the B.S. degree in telecommunications engineering, the M.S. degree in electronics engineering, and the Ph.D. degree in power electronics from the Technical University of Catalonia, Barcelona, in 1997, 2000 and 2003, respectively. Since 2011, he has been a Full Professor with the Department of Energy Technology, Aalborg University, Denmark, where he is responsible for the Microgrid Research Program (www.microgrids.et.aau.dk).

Copyright (c) 2017 IEEE. Personal use is permitted. For any other purposes, permission must be obtained from the IEEE by emailing pubs-permissions@ieee.org.

This is the author's version of an article that has been published in this journal. Changes were made to this version by the publisher prior to publication.
The final version of record is available at http://dx.doi.org/10.1109/TII.2017.2772343

His research interests are oriented to different microgrid aspects, including power electronics, distributed energy-storage systems, hierarchical and cooperative control, energy management systems, smart metering and the internet of things for AC/DC microgrid clusters and islanded minigrids; recently specially focused on maritime microgrids for electrical ships, vessels, ferries and seaports. Prof. Guerrero is an Associate Editor for the IEEE TRANSACTIONS ON POWER ELECTRONICS, the IEEE TRANSACTIONS ON INDUSTRIAL ELECTRONICS, and the IEEE Industrial Electronics Magazine, and an Editor for the IEEE TRANSACTIONS on SMART GRID.

Renke Han (S'16) received the B.S. degree in Automation, the M.S. degree in Control Theory and Control Engineering both from Northeastern University, Shenyang, Liaoning Province, China, in 2013 and 2015 respectively. He is currently pursuing the Ph.D. degree in power electronics system with Department of Energy Technology, Aalborg University, Denmark. From February to August 2017, he was a Visiting Scholar with Laboratoire d'Automatique, Ecole polytechnique fédérale de Lausanne (EPFL), Switzerland under the supervision of Prof. Giancarlo Ferrari-Trecate. His research interests include the distributed control, event-triggered control, plug-and-play control to achieve stability operation and reasonable power sharing for AC and DC microgrid.

Copyright (c) 2017 IEEE. Personal use is permitted. For any other purposes, permission must be obtained from the IEEE by emailing pubs-permissions@ieee.org.