Distance protection in 150/60 kV transformer 60 kV feeders

two real blackout case studies

Bak, Claus Leth; Lind Hansen, Magnus; Nissen, Jens Ole

Published in:
The Journal of Engineering

DOI (link to publication from Publisher):
10.1049/joe.2018.0144

Publication date:
2018

Document Version
Publisher's PDF, also known as Version of record

Citation for published version (APA):
Bak, C. L., Lind Hansen, M., & Nissen, J. O. (2018). Distance protection in 150/60 kV transformer 60 kV feeders: two real blackout case studies. *The Journal of Engineering*, *2018*(15), 802-806.
https://doi.org/10.1049/joe.2018.0144

The Journal of Engineering

The 14th International Conference on Developments in Power System Protection (DPSP 2018)

Distance protection in 150/60 kV transformer 60 kV feeders: two real blackout case studies

eISSN 2051-3305
Received on 2nd May 2018
Accepted on 12th June 2018
E-First on 20th August 2018
doi: 10.1049/joe.2018.0144
www.ietdl.org

Claus Leth Bak[1] ✉, Magnus Lind Hansen[2], Jens Ole Nissen[2]
[1]*Department of Energy Technology, Aalborg University, Aalborg, Denmark*
[2]*Nordenergi Net, Hjørring, Denmark*
✉ *E-mail: clb@iet.aau.dk*

Abstract: Correct setting of protection relays are of major importance to the reliable operation of the power system. The root cause of two consecutive blackouts is analysed and shown to origin from a combination of several minor errors which all can be related to an insufficient/wrong setting of the distance relays and their optional functions together with insufficient testing when putting into operation. The learning lessons are discussed and outlined in order to avoid future blackouts having similar origin.

1 Introduction

Distance relays are widely used in transmission and distribution as both primary and back-up protection. One of the less common applications is its use as a dedicated busbar protection for busbars fed by a transformer. The distance relay is installed in the low voltage (LV) side transformer feeder which feeds the busbar(s) and acts as a primary protection against violent busbar and switchgear short circuits. At the same time this distance relay acts as a back-up protection for the distance relays installed in the line feeders connected to the busbar(s) and thirdly as an overload protection of the transformer. So this transformer distance relay must on one hand be set so it covers close-up busbar faults having fault impedance being virtually only the arc resistance and at the same time be selective with the outgoing line feeders distance protection. Furthermore, it is common to have paralleled transformers to feed the busbar(s), each having their own distance relay in the LV feeder. This paralleling complicates the situation both with regards to zone reach and fault (arc) resistance.

This paper presents a post-study of two consecutive blackout events in Northern Jutland, Denmark during the Christmas holidays of 2015 caused by improper setting of transformer distance protection relays. The authors conducted a thorough analysis of both events and this paper shows that blackout events, as usually, contains more than just one singular mistake, but numerous, smaller mistakes, which are individually not so significant (i.e. protection might work properly for a long period having no malfunctions), but when a very specific network/load condition appears the card house goes over and a blackout happens. The study is very instructive due to its step-by-step deduction which shows that the two blackout events did not have the same root cause, but the second event was triggered by an attempt to avoid a similar blackout as the first one just leading to another blackout with a different root cause.

Another discussion presented in this paper is that modern numerical distance protection relays contains a huge number of parameters to be set. A wrong setting of just one single parameter can lead to malfunction of the entire protection causing a blackout. Therefore during commissioning a very rigorous secondary testing is necessary. It is not sufficient just to check the zones. The entire functionality of the relay including various blocking functions and functional limits (i.e. current thresholds) and possible built-in back-up facilities (i.e. overcurrent and switch-on-to-fault) must be fully checked. Finally, this paper presents recommendations for transformer distance protection relays in order to avoid the above listed inexpediencies.

2 Blackout of Bredkaer (BDK) at 28 December 2015

150/60 kV substation Bredkaer BDK links the transmission system (150 kV) and the distribution system (60 kV) close to major city Hjørring in Northern Jutland. Two 100 MVA 150/60 kV transformers are normally in parallel operation but single transformer operation can happen during maintenance, low load and similar situations. The single line diagram for this layout is shown in Fig. 1.

The 60 kV station and busbars are outdoor equipment and are protected against short-circuit arcs by distance relays A and B. The relays are set to cover basically an impedance in zone 1 which is $Z = R_{\text{arc}} + \text{j}0\ \Omega$ with a time delay typically around 0.5 s in order to be selective with the feeders connected to the 60 kV busbar. The arc resistance depends from short-circuit current, distance (which is given by physical distance between busbars) (1) and the time it has to develop (2) [1]

$$R_{\text{arc}} = \frac{28700 \cdot l_{\text{arc}}}{I_{\text{arc}}^{1,4}} [\Omega] \tag{1}$$

$$R_{\text{arc}}^{*} = \left(1 + \frac{5 \cdot \nu \cdot t_{\text{B}}}{I_{\text{arc}}}\right) \cdot R_{\text{arc}} \tag{2}$$

l_{arc} is the length of the arc in [m], I_{arc} is the short-circuit current [A RMS], v is the wind speed and t_{B} the time the arc is alive and developing. The latter is important when using switch off with some delay which is the case for the distance relay busbar protection. This means that the arc resistance will depend on whether one or two transformers are in operation as the 60 kV side short circuit current is higher for two transformers than for one. This will lower the arc resistance when two transformers are in operation. On the other hand; when both transformers are in operation one relay (A or B) will only measure half of the fault current which will cause an underreach of 50% in both relay A and B. This will to some extent be compensated by the lower arc resistance when two transformers are in operation. So the usual setting philosophy is to set the zone 1 R-reach as if only one transformer is in operation knowing that this will lead to some underreach having two transformers in operation. The X- reach is set to give selective backup with the 60 kV feeders. With modern relays having more than one setting group a setting group is associated with single transformer operation and another with two transformer operation.

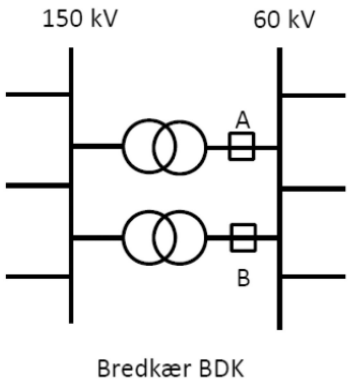

Fig. 1 *Single line diagram of two-transformer supply of BDK 60 kV busbar. A and B are distance relays*

Trip Log - 000685 / 28-12-2015 20:20:22.355 - Nordenergi / Bredkær / 7SA611 V4.7 Var/7SA611 V04.73.03

Number	Indication	Value	Date and time	Initiator
00301	Power System fault	685 - ON	28.12.2015 20:20:22.355	
00302	Fault Event	685 - ON	28.12.2015 20:20:22.355	
03691	Distance Pickup L23	ON	0 ms	
03705	Distance Loop L23 selected forward	ON	0 ms	
03693	Distance Pickup L123	ON	2455 ms	
03706	Distance Loop L31 selected forward	ON	2455 ms	
03805	Distance TRIP command Phases L123	ON	4500 ms	
00533	Primary fault current IL1	0,31 kA	4504 ms	
00534	Primary fault current IL2	0,31 kA	4505 ms	
00535	Primary fault current IL3	0,32 kA	4505 ms	
03671	Distance PICKED UP	OFF	4590 ms	
03705	Distance Loop L23 selected forward	OFF	4590 ms	
03706	Distance Loop L31 selected forward	OFF	4590 ms	

Fig. 2 *Relay KT31 trip log*

2.1 Relay settings in BDK

The transformer feeders KT31 and KT32 were refurbished in the summer 2015 and modern numerical distance relays Siemens 7SA631 [2] were installed to replace old electromechanical distance relays. The new relays are employing two setting groups, where setting group A is used for single transformer operation and setting group B for two transformer operation. Only settings relevant for the relay blackout malfunction are listed.

Group A: Zone 5 non-directional 40 Ω $R/X = 1$ ($R = 40$ Ω and $X = 40$ Ω) and with load encroachment $R_{load} = 35$ Ω and maximum load angle 45°, T_5 delay 4.5 s

Group B: Zone 5 non-directional 80 Ω $R/X = 1$ ($R = 80$ Ω and $X = 80$ Ω) and with load encroachment $R_{load} = 70$ Ω and maximum load angle 45°, T_5 delay 4.5 s

Circuit breaker auxiliary contacts are used to switch between setting group A and setting group B.

The settings and the putting in operation of the relays have been done by an external consultant company.

2.2 Relay operation during blackout

Blackout is caused by the consecutive switch off of both transformers KT31 and KT32.

KT31: The trip is caused by a three-phase event after 4.5 s, see Fig. 2. This corresponds to zone 5 trip. The current recorded is around 310–320 A in the three phases, Fig. 2.

KT32: The trip is caused by a three-phase event after 4.5 s. This corresponds to zone 5 trip. The current recorded is around 530 A, Fig. 3

2.3 Analysis of the cause of the blackout

Obviously KT31 was switched off non-intendedly by zone 5 where after KT32 also was switched off non-intentionally, again by zone 5. This is a very bad scenario as one of the reasons for operating two transformers in parallel is the expected improved reliability, i.e. does one transformer fail the other is still in operation.

Cause of KT31 trip: This is the first trip when both KT31 and KT32 are in operation.

Trip Log - 000921 / 28-12-2015 20:20:26.969 - Nordenergi / Bredkær / 7SA611 V4.7 Var/7SA611 V04.73.03

Number	Indication	Value	Date and time	Initiator
00301	Power System fault	921 - ON	28.12.2015 20:20:26.969	
00302	Fault Event	921 - ON	28.12.2015 20:20:26.969	
03693	21 Pickup ABC	ON	0 ms	
03704	21 Selected Loop AB forward	ON	0 ms	
03705	21 Selected Loop BC forward	ON	0 ms	
03706	21 Selected Loop CA forward	ON	0 ms	
03805	21 TRIP command Phases ABC	ON	4500 ms	
00533	Primary fault current Ia	0,53 kA	4504 ms	
00534	Primary fault current Ib	0,53 kA	4504 ms	
00535	Primary fault current Ic	0,53 kA	4504 ms	
03671	21 PICKED UP	OFF	4623 ms	
03704	21 Selected Loop AB forward	OFF	4624 ms	
03705	21 Selected Loop BC forward	OFF	4624 ms	
03706	21 Selected Loop CA forward	OFF	4624 ms	
00511	Relay GENERAL TRIP command	OFF	4624 ms	

Fig. 3 *Relay KT32 trip log*

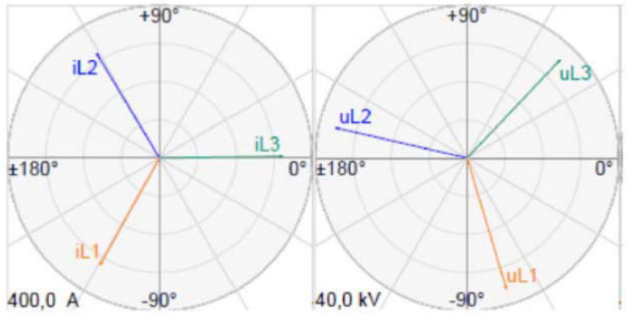

Fig. 4 *KT31 currents (left) and voltages (right) at the instant of trip*

Using SIGRA fault record current in L3 at instant of trip was $I_{L3trip} = 321.6$ A ∠ 1° and phase voltage in L3 $U_{L3trip} = 35.54$ kV ∠ 46°, see Fig. 4. These are not at all faulty condition values, i.e. current is around one-third of the rated current for the transformer and the voltage is a normal phase voltage. Therefore the first indication is that this is not a faulty condition, but a wrong relay zone setting which has led to the relay tripping for normal load impedance.

This gives rise to measured primary impedance equal to

$$z_{\text{fault, prim}} = \frac{35,541\angle 46^{\circ}}{321.6\angle 1^{\circ}} = 110.5\angle 45^{\circ}\,\Omega \tag{3}$$

Which corresponds to $Z_{\text{fault, sec}} = 184.2\angle 45°$ Ω in secondary values. From Fig. 2, it is concluded that the relay detects FORWARD direction. This caused some confusion as the SCADA system at that time showed the power flow to be from 60 kV towards 150 kV. Further analysis showed that the relay was set wrong regarding current transformer polarity due to confusion between being installed in a feeder (where FORWARD is towards line) as being installed in a transformer feeder (where FORWARD is towards busbar). Therefore the measured fault loop impedance (only showed for phase L3) was measured in the FORWARD direction.

Plotting of the measured impedance in the zone setting graph from DIGSI revealed the cause of the trip, see Fig. 5

As can be seen the intended normal three-phase load (in this case power flow to transmission level due to wind power production in the area) has entered non-directional zone 5 and led to trip. This is caused by a wrong assumption when operating transformers in parallel using the doubled reach (see Section 2.2) to compensate for the underreach caused by the parallel operation. This assumption is actually wrong in two ways as the doubling of the reach should be exactly the opposite, i.e. in half to accommodate the trip of one transformer to be taken over by the second for a shorter period, i.e. the doubling of the load and thereby the half of the load impedance.

Cause of KT32 trip: This is the second trip immediately after the KT31 trip separating BDK 60 kV busbar from transmission thereby causing full blackout of the Northern part of Vendsyssel, Jutland.

KT32 has now taken over the (normal) load current from KT31 which gives rise to a current $I_{L3trip} = 563.4\angle 0°$ A and voltage $U_{L3trip} = 36.3\angle 40°$ kV, again normal values giving rise to a measured impedance

$$z_{\text{fault, prim}} = \frac{36,320\angle 40^{\circ}}{563.4\angle 0^{\circ}} = 64.5\angle 40^{\circ}\ \Omega \qquad (4)$$

Which corresponds to $Z_{\text{fault, sec}} = 107.4\angle 40°\ \Omega$. Checking the event log of KT32 shows that the change of setting group B (parallel operation) to setting group A (single transformer) happened at 20:20:31:752, see Fig. 6

The trip of KT32 was executed at 20:20:26:969 + 4:624 = 20:20:31:593, see Fig. 7.

Subtracting the instant of setting group change over from instant of trip f KT32 reveals that the change of setting group from B to A was only 159 ms delayed as compared to the trip. In other words, KT32 relay changed setting group slower than the zone 5 trip caused by the above-mentioned normal load situation. Section 2.1 states that setting group A has zone 5 setting 40 Ω (primary value) which can be compared with the above 64.5 Ω so a faster setting group change to group A would have solved the problem and avoided the blackout.

2.4 Discussion

It can be concluded that the relays operate precisely as being (erroneously) set. However, there are few further complications which lead to the blackout:

- The initial wrong assumption of the doubling of the zone 5 impedances in parallel operation.
- The normal load situation is actually a production and it has a rather low-power factor. Therefore it can enter zone 5 'ears' outside the load encroachment.
- That the setting group change over operates too slowly when subject to two consecutive faults with a very short intermediate time.

Finally, it can be concluded that the cause of this blackout is similar to many other major blackouts caused by a wrong/not sufficient insight into the variations of normal power system loads and the outermost distance relay zone coordination as, i.e. the 2003 North American blackout [1].

3 Blackout of DYB at 30 December 2015

150/60 kV substation Dybvad DYB has the same configuration as BDK, i.e. like shown in Fig. 1 and has also recently (before this blackout) been equipped with new Siemens 7SA611 distance relays. These have been set and put into operation by the same consultant company using the same principles.

Following the blackout in BDK 2 days earlier NordEnergi did not yet know the detailed explanation to the BDK event so with good reason they suspected the newly installed distance relays in BDK to have some kind of wrong setting/malfunction/improper installation. As DYB was equipped in the same way it was decided to de-activate the distance protection module in the 7SA611 relays and use the back-up overcurrent protection (also included in the 7SA611 relays) for protecting the 60 kV station until a complete understanding of the event in BDK was ready.

The 7SA631 relays OC backup becomes active when the voltage measurement of the relay disappears. This is typically due to some external fault in voltage transformers and/or their cable connections. The most common way to announce this state to the relays is by using mini-circuit breakers (for protection the voltage transformer secondary circuits) with an auxiliary contact which is connected to a binary input at the relay. If the mini-CB trips the relay will switch to OC backup as the distance function will acknowledge the missing voltage as an impedance approaching 0 Ω and issue instantaneous trip although no primary fault exists.

However, in this particular installation normal fuses were used to protect the secondary circuit so in order to achieve the same 'reaction' (disabling distance and enabling OC backup) personnel from NordEnergi opened the switchable terminals of the voltage transformers for KT31 and KT32 distance relays. The relay internally recognises 'lack of voltage' instead of using the binary signal from mini-CB.

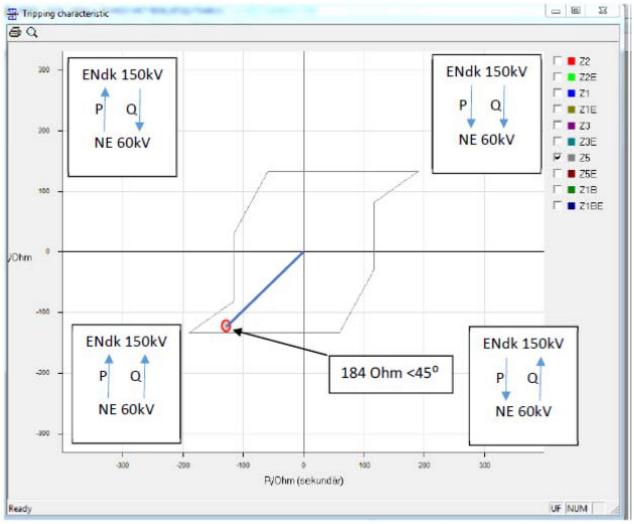

Fig. 5 *R–X graph shows the measured impedance in secondary values to just enter zone 5 in reverse direction. NE means NordEnergi (distribution 60 kV) and ENdk is TSO (150 kV). The arrows indicate power direction*

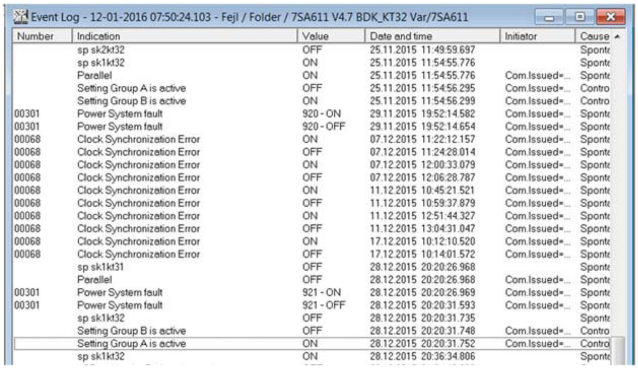

Event Log - 12-01-2016 07:50:24.103 - Fejl / Folder / 7SA611 V4.7 BDK_KT32 Var/7SA611

Number	Indication	Value	Date and time	Initiator	Cause
	sp sk2kt32	OFF	25.11.2015 11:49:59.697		Sponte
	sp sk1kt32	ON	25.11.2015 11:54:55.776		Sponte
	Parallel	ON	25.11.2015 11:54:55.776	Com.Issued=...	Sponte
	Setting Group A is active	OFF	25.11.2015 11:54:56.295	Com.Issued=...	Contro
	Setting Group B is active	ON	25.11.2015 11:54:56.299	Com.Issued=...	Contro
00301	Power System fault	920 - ON	29.11.2015 19:52:14.582	Com.Issued=...	Sponte
00301	Power System fault	920 - OFF	29.11.2015 19:52:14.654	Com.Issued=...	Sponte
00068	Clock Synchronization Error	ON	07.12.2015 11:22:12.157	Com.Issued=...	Sponte
00068	Clock Synchronization Error	OFF	07.12.2015 11:24:28.014	Com.Issued=...	Sponte
00068	Clock Synchronization Error	ON	07.12.2015 12:00:33.079	Com.Issued=...	Sponte
00068	Clock Synchronization Error	OFF	07.12.2015 12:06:28.787	Com.Issued=...	Sponte
00068	Clock Synchronization Error	ON	11.12.2015 10:45:21.521	Com.Issued=...	Sponte
00068	Clock Synchronization Error	OFF	11.12.2015 10:59:37.879	Com.Issued=...	Sponte
00068	Clock Synchronization Error	ON	11.12.2015 12:51:44.327	Com.Issued=...	Sponte
00068	Clock Synchronization Error	OFF	11.12.2015 13:04:31.047	Com.Issued=...	Sponte
00068	Clock Synchronization Error	ON	17.12.2015 10:12:10.520	Com.Issued=...	Sponte
00068	Clock Synchronization Error	OFF	17.12.2015 10:14:01.572	Com.Issued=...	Sponte
	sp sk1kt31	OFF	28.12.2015 20:20:26.968		Sponte
	Parallel	OFF	28.12.2015 20:20:26.968	Com.Issued=...	Sponte
00301	Power System fault	921 - ON	28.12.2015 20:20:26.969	Com.Issued=...	Sponte
00301	Power System fault	921 - OFF	28.12.2015 20:20:31.593	Com.Issued=...	Sponte
	sp sk1kt32	OFF	28.12.2015 20:20:31.735		Sponte
	Setting Group B is active	OFF	28.12.2015 20:20:31.748	Com.Issued=...	Contro
	Setting Group A is active	ON	28.12.2015 20:20:31.752	Com.Issued=...	Contro
	sp sk1kt32	ON	28.12.2015 20:36:34.806		Sponte

Fig. 6 *Event log from KT32 shows change of setting group*

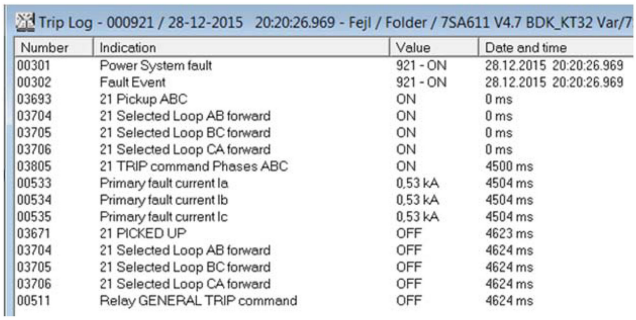

Trip Log - 000921 / 28-12-2015 20:20:26.969 - Fejl / Folder / 7SA611 V4.7 BDK_KT32 Var/7

Number	Indication	Value	Date and time
00301	Power System fault	921 - ON	28.12.2015 20:20:26.969
00302	Fault Event	921 - ON	28.12.2015 20:20:26.969
03693	21 Pickup ABC	ON	0 ms
03704	21 Selected Loop AB forward	ON	0 ms
03705	21 Selected Loop BC forward	ON	0 ms
03706	21 Selected Loop CA forward	ON	0 ms
03805	21 TRIP command Phases ABC	ON	4500 ms
00533	Primary fault current Ia	0,53 kA	4504 ms
00534	Primary fault current Ib	0,53 kA	4504 ms
00535	Primary fault current Ic	0,53 kA	4504 ms
03671	21 PICKED UP	OFF	4623 ms
03704	21 Selected Loop AB forward	OFF	4624 ms
03705	21 Selected Loop BC forward	OFF	4624 ms
03706	21 Selected Loop CA forward	OFF	4624 ms
00511	Relay GENERAL TRIP command	OFF	4624 ms

Fig. 7 *Trip log of KT32 shows the time of trip*

DYB experienced two consecutive blackouts, one at 04:48 and another at 09:38. In between both transformers were put into operation without problems.

3.1 Relay operation during blackout

Blackout is caused by the consecutive switch off of both transformers KT31 and KT32 at 04:48:21 and 09:38:37. Both have same cause and progress.

KT31: The trip is caused by a three-phase event after 0.5 s, see Fig. 8. This corresponds to zone 1 trip. The current recorded is around 100 A in the three phases.

KT32: The trip is caused by a three-phase event instantaneously (1 ms) caused by distance pickup of fault loop BC, see Fig. 9. The current recorded is around 180 A.

Trip Log - 000688 / 30-12-2015 04:48:21.407 - DYBVAD Udfald 30_12_2015 / Folder / 7SA611 V4.7 KT31/7SA611 V04.73.03

Number	Indication	Value	Date and time
00301	Power System fault	688 - ON	30.12.2015 04:48:21.407
00302	Fault Event	688 - ON	30.12.2015 04:48:21.407
03689	Distance Pickup L31	ON	0 ms
03706	Distance Loop L31 selected forward	ON	0 ms
03805	Distance TRIP command Phases L123	ON	504 ms
00533	Primary fault current IL1	0,10 kA	509 ms
00534	Primary fault current IL2	0,10 kA	509 ms
00535	Primary fault current IL3	0,10 kA	509 ms
00590	Line closure detected	ON	554 ms
03671	Distance PICKED UP	OFF	560 ms
03706	Distance Loop L31 selected forward	OFF	560 ms

Fig. 8 *Trip log of KT31 for fault at 04:48*

Trip Log - 000598 / 30-12-2015 04:48:21.977 - DYBVAD Udfald 30_12_2015 / Folder / 7SA611 V4.7 KT32/7SA611 V04.73.03

Number	Indication	Value	Date and time
00301	Power System fault	598 - ON	30.12.2015 04:48:21.977
00302	Fault Event	598 - ON	30.12.2015 04:48:21.977
03691	21 Pickup BC	ON	1 ms
03705	21 Selected Loop BC forward	ON	1 ms
03805	21 TRIP command Phases ABC	ON	1 ms
00533	Primary fault current Ia	0,18 kA	5 ms
00534	Primary fault current Ib	0,18 kA	5 ms
00535	Primary fault current Ic	0,19 kA	5 ms
03693	21 Pickup ABC	ON	11 ms
03704	21 Selected Loop AB forward	ON	11 ms
03706	21 Selected Loop CA forward	ON	11 ms

Fig. 9 *Trip log of KT32 for fault at 04:48*

00168	Failure: Voltage absent	OFF	30.12.2015 09:37:36.125
02054	Emergency mode	OFF	30.12.2015 09:37:36.125
03652	Distance is BLOCKED	OFF	30.12.2015 09:37:36.125
07152	Backup O/C is BLOCKED	ON	30.12.2015 09:37:36.125
00168	Failure: Voltage absent	ON	30.12.2015 09:37:45.540
02054	Emergency mode	ON	30.12.2015 09:37:45.540
03652	Distance is BLOCKED	ON	30.12.2015 09:37:45.540
07152	Backup O/C is BLOCKED	OFF	30.12.2015 09:37:45.540
00168	Failure: Voltage absent	OFF	30.12.2015 09:38:13.779
02054	Emergency mode	OFF	30.12.2015 09:38:13.779
03652	Distance is BLOCKED	OFF	30.12.2015 09:38:13.779
07152	Backup O/C is BLOCKED	ON	30.12.2015 09:38:13.779
00301	Power System fault	689 - ON	30.12.2015 09:38:37.728
00301	Power System fault	689 - OFF	30.12.2015 09:38:38.288
	>CB waiting for Spring charged	ON	30.12.2015 09:38:38.528

Fig. 10 *Part of event log for KT31 shows ON/OFF changes between distance and emergency OC*

3.2 Analysis of the cause of the blackout

Obviously, KT31 was switched off non-intendedly by zone 1 where after KT32 also was switched off non-intentionally, but instantaneously by the distance function.

Cause of KT31 trip: This is the first trip when both KT31 and KT32 are in operation.

The first to conclude is that the distance function was active although it was intended to be disabled by disconnecting the voltage transformers (i.e. fuse failure initiated backup overcurrent (OC) should be active). Checking the event log shows multiple OFF/ON events for distance BLOCKED, backup OC BLOCKED, emergency MODE and voltage ABSENT around the time of the blackout, see Fig. 10.

The manual for 7SA611 states that 'In address 2913 FFM U < max (3ph) the minimum voltage threshold is set. If the measured voltage drops below this threshold and a simultaneous current jump which exceeds the limits according to address 2914 FFM Idelta (3p) is not detected while all three phase currents are greater than the minimum current required for the impedance measurement by the distance protection according to address 1202 Minimum Iph>, a three-phase measured voltage failure is recognized'.

So the transition to backup OC depends from the absence of VT voltage. Address 2913 was set rather low and it is likely that induced noise in the disconnected and non-grounded VT signal cables have led to a voltage at relay voltage terminals not always being below this set value. Furthermore address 1202 (for distance function enabled) was set to 100 A. At the time of the trip the load current was precisely exceeding this value, see Fig. 11.

So by sheer coincidence measured VT voltage fluctuated (due to noise) to a value higher than threshold (2913) disabling backup OC and load current exceeded 100 A (1202) enabling distance leading to a measured impedance virtually zero due to the missing voltage. This caused zone 1 trip with the correct time delay 0.5 s

Cause of KT32 trip: This is the second trip immediately after the KT31 trip separating Dybvad (DYB) 60 kV busbar from transmission thereby causing full blackout of the Eastern part of Vendsyssel, Jutland.

The root cause of this trip is the same as for KT31, i.e. the wrongly recognition of fuse failure combined with the load current exceeding 100 A. Careful checking of the settings revealed a

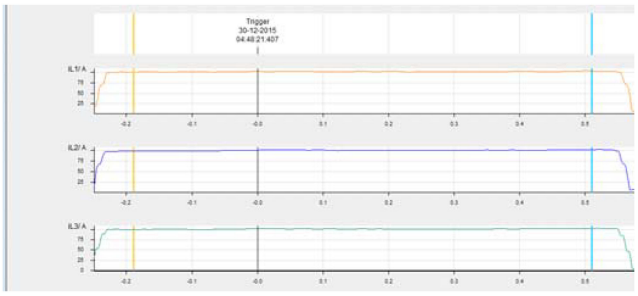

Fig. 11 *Load current around instant of trip for KT31*

Distance zones (quadrilateral) - Settings Group B

Zone Z1 | Zone Z1B-exten. | Zone Z2 | Zone Z3 | Zone Z4 | Zone Z5 | Zone Z6

Settings:

No.	Settings	Value
1351	Operating mode Z1B (overrreach zone)	Non-Directional
1352	R(Z1B), Resistance for ph-ph-faults	1,590 Ohm
1353	X(Z1B), Reactance	1,160 Ohm
1354	RE(Z1B), Resistance for ph-e faults	1,780 Ohm
1355	T1B-1phase, delay for single ph. faults	oo sec
1356	T1B-multi-ph, delay for multi ph. faults	oo sec
1357	Z1B enabled before 1st AR (int. or ext.)	YES

Settings:

No.	Settings	Value
1351	Operating mode Z1B (overrreach zone)	Non-Directional
1352	R(Z1B), Resistance for ph-ph-faults	2,719 Ohm
1353	X(Z1B), Reactance	1,624 Ohm
1354	RG(Z1B), Resistance for ph-gnd faults	2,939 Ohm
1355	T1B-1phase, delay for single ph. faults	oo sec
1356	T1B-multi-ph, delay for multi ph. faults	0,00 sec
1357	Z1B enabled before 1st AR (int. or ext.)	YES

Fig. 12 *Typing error for T1B. Should have been ∝ (top) but became 0.00 (bottom)*

Fig. 13 *Rise of load current for KT32 at instant of trip*

typing error in address 1356 for the extended zone 1B. Time delay T1B should have been set to infinity ∝ (oo) disabling this zone but was set to 0.00. The small types on the laptop screen have probably made this error likely to happen, see Fig. 12.

This led to an immediate trip by zone 1B with time delay 0 s.

3.3 Discussion

The reason that KT31 trips as the first is due to many factors. Load current for KT31 is just exceeding 100 A, whereas it is 84 A for KT32. This is due to the fact that the two transformers have different MVA rating thereby not sharing the load current evenly. Z1B is set correctly disabled (∝ s) in KT31. Trip of KT31 leads to a rise in load current for KT32 (from 84 to 180 A, see Fig. 13) thereby activating distance leading to an immediate trip in Z1B. The order of trip would have changed if the wrong setting of T1B was shifted to the other transformer.

The reason for the blackout not happening immediately when disconnecting the VTs is due to one or more of the criteria for fuse failure not being violated. Load current is one and it is common that this can be below 100 A due to infeed of decentralised production to the 60 kV network.

So it can be concluded that the initial blackout in BDK caused a lack of confidence to the relays in DYB which were intended disconnected, but this was done in a way not appropriate. Furthermore setting errors led to a root cause for the blackouts in DYB which were different than in BDK. In this way, all three blackouts are actually linked together as a common occurrence.

4 Discussion and recommendations

The blackouts discussed in Sections 2 and 3 show a number of important learning lessons in order to avoid future blackouts which are briefly summarised below:

- The correct operation of modern numerical protection relays relies on a careful and correct setting of numerous parameters. Wrong setting of one single parameter can lead to a complete malfunction leading to blackout.
- Personnel doing the calculation of settings, implementing these and putting the relay into operation must be highly skilled experts in order to avoid wrong settings leading to blackout.
- The initial testing and putting a newly installed numerical relay into operation must be very rigorous and thorough. It is not enough to just to test zone settings with secondary testing equipment. Every single active function (extended zones, backup, fuse failure, earth fault etc.) must be tested giving evidence of correct function. Default relay settings are not always sufficient to assure a correct mode of operation in all cases.
- Special care should be given to the changeover of setting groups as this includes around 5 s of internal time delay in the relay (as discussed in Section 2). The normal need for a changeover is usually due to intentional disconnection of a power system component such as a line or a transformer. Disconnection is due to a trip (as in our case) can lead to other relays tripping because the changeover is slower than the protection function reacting on the changed conditions caused by the first trip.
- Fuse failure measurement supervision must be carefully set and tested to avoid wrong operation due to induced noise voltages. It must not be too sensitive.

It is recommended to consider the following when using distance relays as transformer feeder protection:

- Carefully assess the need for setting group change. Is this really necessary or can an acceptable protection be achieved using just one well selected set of parameters.
- The setting of the outermost zones must be carefully matched with load impedance. It is not sufficient just to consider the load in MW alone. The load angle must also be considered in order to correctly shape the load encroachment. Transformers in parallel feeding networks having other points of infeed can exhibit large circulating reactive currents which can lead to impedances entering the outermost zone.
- The use of fuse failure enabled backup protection must rely on mini-CB with auxiliary contact rather than internally calculated voltages in relay. Furthermore disabling of main protection by disconnecting VTs should be avoided.
- Relays should be tested using primary tests to check correct polarity of VTs and CTs.

It is worth noting that the modern numerical relays used did not malfunction. They were merely used in a wrong/inadequate way.

5 Conclusions

Modern numerical protection relays are much more complicated to use than traditional old-fashioned electromechanical relays. The main advantage is that they are more reliable and can be more precisely adapted to very specific protection needs and that they include more than just one protection function. The main disadvantage is that they require highly skilled engineers to plan the settings, implement these and test the entire relays functionality thoroughly when putting in operation. This paper has described and analysed the reasons behind blackouts in Vendsyssel, Denmark and shown that many factors, all related to the complexity of modern numerical protection relays, caused these three consecutive blackouts and a set of recommendations are provided in order to help avoiding future blackouts. It should be noted that the authors acknowledge that the correct use of modern numerical protection relays leads to a better protection in general and thereby associated higher reliability of the power system.

6 Acknowledgments

The main author acknowledges Nordenergi for being open for publishing these results so others can learn from them. Furthermore is acknowledged the many years of fruitful cooperation between Nordenergi and the main author.

7 References

[1] Ziegler, G.: '*Numerical distance protection, principles and applications*' (Siemens, 2008, 3rd edn.)

[2] Siemens SIPROTEC distance protection 7SA6 v4.74 manual, C53000-G1176-C156-9