Lyapunov- and Eigenvalue-based Stability Assessment of the Grid-connected Voltage Source Converter

Shakerighadi, Bahram; Ebrahimzadeh, Esmaeil; Blaabjerg, Frede; Bak, Claus Leth

Published in:
Proceedings of the IEEE International Power Electronics and Application Conference and Exposition (PEAC 2018)

DOI (link to publication from Publisher):
10.1109/PEAC.2018.8589973

Publication date:
2018

Document Version
Early version, also known as pre-print

Lyapunov- and Eigenvalue-based Stability Assessment of the Grid-connected Voltage Source Converter

Bahram Shakerighadi, Esmaeil Ebrahimzadeh, Frede Blaabjerg, Claus Leth Bak

Department of Energy Technology
Aalborg University
Aalborg, Denmark

bas@et.aau.dk, ebb@et.aau.dk, fbl@et.aau.dk, clb@et.aaulck

***Abstract*— Grid-connected Voltage Source Converters (VSCs) are widely used in Power Electronic-based (PE-based) power systems. Therefore, it is necessary to have stability analysis tools for different system conditions. In this paper, Lyapunov- and eigenvalue-based methods are used in order to analyze the stability of the grid-connected VSC. This Lyapunov-based technique is valid for large-signal stability analysis, when the system is subjected to a large disturbance. Eigenvalue-based methods are simpler but these are not valid under large disturbance conditions. The Lyapunov-based analysis can systematically model the linear and non-linear behavior of the grid-connected VSCs.**

***Keywords*—Voltage Source Converter (VSC), Eigenvalue-based stability, Energy function, Lyapunov-based stability, Power Electronic-based (PE-based) power systems.**

I. Introduction

By the high integration of Power Electronic-based (PE-based) systems like renewable energy systems into the electrical grid, many advantages such as sustainability and environment benefits are achieved [1]. Despite all of the advantages, some challenges are increasing into the system control and stability [2]. As PE-based systems include more complex units compared with the conventional power systems, the stability analysis of the PE-based systems becomes more complicated with many more units. Therefore, appropriate methods need to be used in order to analyze the stability of the PE-based power systems [3].

Stability analysis of the power systems is one of the most important issues in power system analysis [4]. Stability of the power system can be divided into several subgroups based on the subjected disturbance and the time frame of interest. Generally, disturbances that are small and may cause small changes in the system state variables, e.g. small change in load, are considered in small-signal stability issues, while large-disturbances such as faults in lines may lead to larger instability.

In small-signal stability analysis of the power system, linearization is credible and normal mood. By linearizing system equations, many linear-based methods may be applied in order to find stability boundaries [5], [6]. As a result, control systems are mostly designed based on the linear-based stability methods, e.g. Nyquist stability criterion and state space stability analysis [5]–[7]. These techniques are widely used in PE-based power systems stability analysis and control [8]–[11].

In small-signal stability analysis of the power system, linearization is credible. By linearizing system equations, many linear-based methods may be applied in order to find stability boundaries. As a result, control systems are mostly designed based on the linear-based stability methods, e.g. Nyquist stability criterion and state space stability analysis. These techniques are widely used in PE-based power systems stability analysis and control.

On the other hand, power system is a non-linear system in nature. Therefore, linear analysis mostly show an approximation response of the system. This means that linear-based stability methods, such as Nyquist criterion, are developed based on the linearized form of the system. This is not valid when the non-linear parts of the systems cannot ne neglected. In order to overcome the non-linearity behavior of the system, there are some non-linear techniques in stability analyzing of the system [12]. To do so, nonlinear-based control methods are developed, which is widely discussed in the literature [13]–[15].

Lyapunov-based stability techniques are one of the most acceptable methods in large-signal stability analysis [15]. The concept behind the Lyapunov-based techniques is very fundamental- called Energy Function (EF). Based on the EF concept, every physical system includes an energy, which has a positive value. In this manner, a function may be defined in order to illustrate the energy of the system. If the derivative of the EF with respect to the time is negative, then the system will converge into a stable equilibrium point. Otherwise, the system may become unstable.

Regarding to the PE-based power systems stability, energy function is one of the most credible method in order to find the boundary of the stability [15]. In [16], the VSC is modeled as an synchro-machine. Then, DC and AC parts are considered as kinetic and potential energy, respectively. Based on that, an EF is defined in order to model the stability boundaries of the system. The synchro-machine model for PE-based units are well known by [17]. In [18], another energy function is defined in which droop control of the VSC is considered in the model. As a simplified model of the system is considered for the EF, simulation results shows an approximation of the system stability behavior. This model is credible for the first swing after fault clearance. In [19], a new control method based on Lyapunov concept is developed in order to control PE-based units subjected to large-disturbance. The Lyapunov function is defined based on system state variables. The point in this paper is that it is not necessary to linearize equations in order to find the stability boundaries. This feature gives us more accurate

978-1-5386-6054-6/18/$31.00 ©2018 IEEE

system stability boundaries in compare with linearized-based methods, as in linear control techniques there is always an approximation of the non-linear system in modelling.

By reviewing the literature about EF methods developed in stability analysis of the PE-based systems, it can be concluded there is no straight method in order to define the energy function, although there are some recommendations in this manner. This means that one can define an EF as long as it satisfy EF's constraints.

In this paper, the stability of the system based on the energy function and its eigenvalues is assessed. Results of the energy function are compared with the linear control method, specifically the linear state space stability analysis and the eigenvalues of the system, in order to validate the model. Here, the main goal is to define a systematic way in order to analyze VSC stability by energy function. This has been discussed to a large extent in power systems, while there has been less attention on this topic in PE-based power systems.

The rest of the paper is organized as follows: in Section II, the concept of the Lyapunov-based method will be explained in order to clarify the method applied in the system. In Section III, the Lyapunov-based method and the small-signal methods are compared for the PE-based units. Simulation results are discussed in Section IV and finally the paper is concluded in Section V.

II. Lyapunov-based Stability Analysis

As aforementioned, Lyapunov-based methods are developed based on the energy function concept. In this Section, the concept of the energy-based methods is explained.

A. Basic concept of the Lyapunov function

There is no straight way to define energy function for a system. Therefore, one of the main challenges in analyzing the system stability based on the energy function is to define an appropriate energy function.

Assume that the energy function of the system is defined as follows:

$$V = f\left(x,t\right) \tag{1}$$

where V defines the energy of the system. The variable x and t define state variables and time, respectively. Based on the Lyapunov concept, the energy of every physical system cannot be negative. This leads to the following equation:

$$V \geq 0 \tag{2}$$

If the system subjected to a disturbance, then state variables of the system may change. As a consequence, the system energy will change. The derivative of the energy function with respect to time gives a valuable information of the system stability. If it is positive, then the system energy will rise with respect to the time, and therefore the system may become unstable. On the other hand, if the energy function derivative with respect to the time is negative, the system's energy will decrease and the system will converge to a stable equilibrium point, eventually. Converting this into the mathematical model is shown as follows:

$$\frac{\partial V}{\partial t} > 0 \rightarrow unstable \tag{3}$$

$$\frac{\partial V}{\partial t} < 0 \rightarrow stable \tag{4}$$

This is credible for non-linear and linear systems. The concept is widely accepted in many field, specifically in power systems. This is discussed in the next part.

B. Application of the Lyapunov function in power systems

The application of the Lyapunov function in power system is discussed in this part. Consider a generator connected to the grid through a line, shown in Fig. 1.

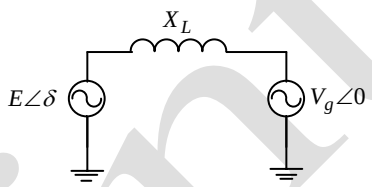

Fig. 1. A simplified model of a generator connected to the grid through a line (X_L).

In this manner, the generator and the grid are considered as voltage sources, $E\angle\delta$ and $V_g\angle 0$, respectively, which are connected through a line, X_L. The active power produced by the generator can be determined as follows:

$$P_e = \frac{E.V_g}{X_L}.\sin\left(\delta\right) \tag{5}$$

The system state may be defined in three stages: before a fault, during the fault, and after clearing the fault, as follows:

$$\begin{cases} \dot{x}\left(t\right) = f_1\left(x\left(t\right)\right) & -\infty < t \leq t_f \\ \dot{x}\left(t\right) = f_2\left(x\left(t\right)\right) & 0 < t \leq t_{cl} \\ \dot{x}\left(t\right) = f_3\left(x\left(t\right)\right) & t_{cl} < t < \infty \end{cases} \tag{6}$$

where $x(t)$ and $\dot{x}(t)$ are system state variables and its derivative with respect to the time, respectively. t_f and t_{cl} are the time when the fault happen and the clearing time, respectively. $f_1\left(x\left(t\right)\right)$, $f_2\left(x\left(t\right)\right)$, and $f_3\left(x\left(t\right)\right)$ may be differ based on the fault and system characteristics. Consider swing equation of the generator as follows:

$$\begin{cases} M\dfrac{d^2\delta}{dt^2} = P_m - P_e \\ \dfrac{d\delta}{dt} = \omega \end{cases} \tag{7}$$

where P_m and M are the mechanical power and momentum of generator rotor, respectively. In addition, ω is the rotor angular displacement speed. The energy function based on the swing equation of the generator may be defined as follows:

$$V\left(\delta,\omega\right) = \frac{1}{2}M\omega^2 - P_m\left(\delta - \delta^s\right) - P_e^{\max}\left(\cos\delta - \cos\delta^s\right) \tag{8}$$

where $P_e^{\max} = \frac{E.V_g}{X_L}$, and δ^s is the stable equilibrium point of generator voltage after a fault. If the system's energy function is positive definite and its derivative with respect to the time is negative definite, then the system will converge to a stable equilibrium point. It can be shown by using (4), if the fault is removed from the system after a critical time, the system's energy function may not converge to a stable equilibrium point [20] and the system may become unstable. The critical time can be obtained based on (4).

III. Comparing Lyapunove-based and Eigenvalue-based Stability Analysis of the VSC

In this section, the stability of the grid-connected VSC by using the energy function method and the eigenvalue-based analysis is used. Consider a typical VSC connected to the grid, as shown in Fig. 2, where I_{abc} and V_{abc} are the measured

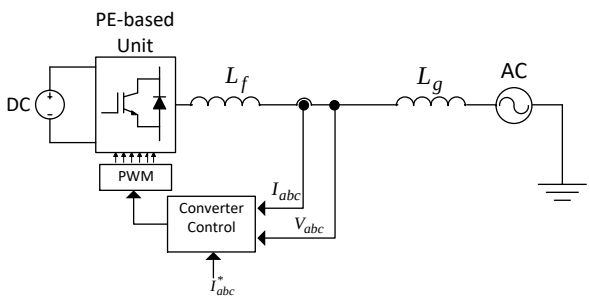

Fig. 2. Simplified model of the grid-connected VSC.

values of the VSC output current and voltage, respectively. I^*_{abc} is the current reference for the current control, which includes two parts in the *dq* rotating frame- $I_{d.ref}$ and $I_{q.ref}$. The control system is discussed in details in [3]. In this paper, a simplified model of the current control will be used, as the control system itself is not the subject of the paper; see Fig. 3.

For simplification, time delay caused by the Pulse Width Modulation (PWM), and outer control loops, such as active power control, are neglected in the control system; therefore, only current control is considered as the converter's controller. In addition, DC link control system is neglected, and the DC side of the PE-based unit is considered as an ideal DC voltage. While all the mentioned control system details can be added to the main control system, they may have no intensive effect on stability analyzing techniques and methodologies. If the grid side is considered as an ideal

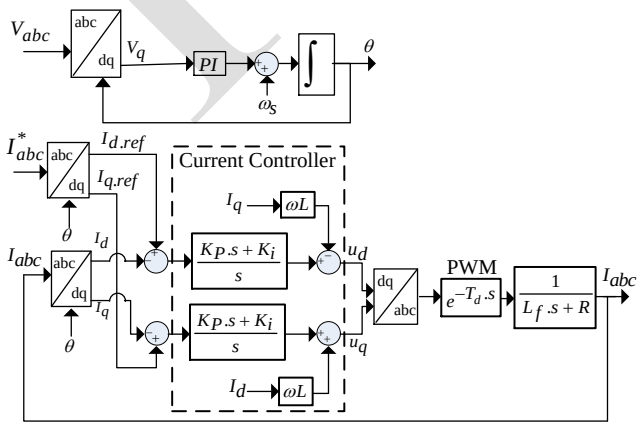

Fig. 3. Converter control block diagram.

voltage source, i.e. $L_g = 0$, omitting the delay introduced by the PWM, then the system's model can be introduced in the following form:

$$\begin{cases} \begin{pmatrix} \dot{x}_1 \\ \dot{x}_2 \end{pmatrix} = \begin{pmatrix} 0 & -K_i \\ \frac{1}{L} & -\frac{R+K_p}{L} \end{pmatrix} \cdot \begin{pmatrix} x_1 \\ x_2 \end{pmatrix} + \begin{pmatrix} K_i \\ \frac{K_p}{L} \end{pmatrix} .I_{ref} \\ I = \begin{pmatrix} 0 & 1 \end{pmatrix} \begin{pmatrix} x_1 \\ x_2 \end{pmatrix} \end{cases} \tag{9}$$

where x_1 and x_2 are system state variables. K_p and K_i are current controller's proportional and integral coefficient, respectively. This state-space form is valid for both *d* and *q* components of the *dq* rotating frame. Transforming voltage and current values from three-phase system in an *abc* reference frame into *dq* rotating frame can be done by using Park transform matrix, shown as follows:

$$\begin{bmatrix} d \\ q \\ 0 \end{bmatrix} = \frac{2}{3} . \begin{bmatrix} \sin(\theta) & \sin\left(\theta - \frac{2\pi}{3}\right) & \sin\left(\theta - \frac{4\pi}{3}\right) \\ \cos(\theta) & \cos\left(\theta - \frac{2\pi}{3}\right) & \cos\left(\theta - \frac{4\pi}{3}\right) \\ \frac{1}{2} & \frac{1}{2} & \frac{1}{2} \end{bmatrix} \begin{bmatrix} a \\ b \\ c \end{bmatrix} \tag{10}$$

where θ is the phase angle of the three-phase input signal detected by the Phase Lock Loop (PLL) circuit. Here, the input signal is chosen to be the three-phase voltage of the converter's output. The PLL circuit is illustrated as follows, while its dynamic is not considered in the control system, for the sake of the simplification.

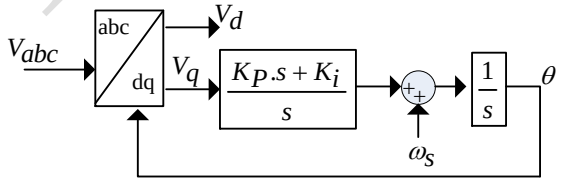

Fig. 4. PLL block diagram for detecting phase of the voltage.

The eigenvalues of the state-space equation (9) are determined as follows:

$$\lambda_{1,2} = \frac{-\left(\frac{R+K_p}{L}\right) \pm \sqrt{\left(\frac{R+K_p}{L}\right)^2 - 4\frac{K_i}{L}}}{2} \tag{10}$$

If the real part of the eigenvalues are in the Left Half Plane (LHP) of the s-plane (with real and imaginary axis), then the system works in the stable status. This means that the real part of the eigenvalues should be negative, which means that the value of the *(R+K$_P$)* and K_i must be positive. Regarding to the Lyapunov function, it can be defined in a matrix format as follows:

$$V(X,t) = X^T.P.X \tag{11}$$

where *X* and X^T are the state-variable vector and its transpose format, respectively. Matrix *P* may be defined differently,

but it should be positive definite. The positive definite matrix is explained in the Appendix-A. The derivative of the energy function with respect to the time may be obtained as follows:

$$\dot{V}(X,t)=\left(X^T.P.X\right)'=-X^T.Q.X \tag{12}$$

where $Q=-\left(A^T.P+P.A\right)$. If the Q is positive definite, then the derivative of the energy function with respect to the time will be negative. In this circumstance, the control system will be stable. Considering P and A as follow, Q can be obtained as (14):

$$P=\begin{pmatrix} s_{11} & s_{12} \\ s_{21} & s_{22} \end{pmatrix}, A=\begin{pmatrix} 0 & -K_i \\ \frac{1}{L} & -\frac{(R+K_P)}{L} \end{pmatrix} \tag{13}$$

$$Q=\begin{pmatrix} -\frac{(s_{12}+s_{21})}{L} & s_{11}.K_i+s_{12}.\left(\frac{K_P+R}{L}\right)-\frac{s_{22}}{L} \\ s_{11}.K_i+s_{21}.\left(\frac{K_P+R}{L}\right)-\frac{s_{22}}{L} & (s_{12}+s_{21}).K_i+2s_{22}.\left(\frac{K_P+R}{L}\right) \end{pmatrix} \tag{14}$$

By considering the definition of the parametric form of the P and Q, in addition to the definition of the positive definite matrix introduced in the Appendix A, it can be concluded that for the positive value of the $(R+K_P)$ and K_i and, P and Q are always positive definite.

IV. Simulation Results

In this section, simulation results will be illustrated and discussed in details in order to have a better overview of the eigenvalue- and Lyapunov-based stability analysis. In this way, time domain simulations are developed in the Matlab/Simulink. In addition, stability analysis in the frequency domain are developed by using the Matlab software.

The stability of the current control without considering PWM delay is subjected in this part. As discussed in Section III, as long as the control system damper ,(K_P+R), and integrator coefficient, K_i, are positive, then the system will work in the stable mode. Based on the characteristic equation of the current control, the damping ratio and the natural frequency of the system are given as follows:

$$\begin{cases} \omega_n=\sqrt{\frac{K_i}{L}} \\ \xi=\frac{R+K_P}{2\sqrt{K_i.L}} \end{cases} \tag{19}$$

Assume R = 0.1 Ω, L = 10 mH, K_i = 800. Then, by increasing K_P from 0.8 to 100, damping ratio will be increased. Therefore, step response of the current control will converge faster; see Fig. 5. In this figure, the current control step response in d-axis. The current reference is increased from zero to ten at t = 2 s. As you can see, for K_P=0.8, the current control will converge to its final value after 100 ms. If the current control is designed to have a very fast response, such as 1 ms, then it needs a high bandwidth, which typically will be sensitive to noise. Therefore, in designing the current control, practical limits should be considered. The eigenvalues with respect to the related K_P are illustrated in Fig. 6. As K_P is increased, the poles may lie on the real axis. In this circumstance, one of the poles keeps closer to the imaginary axis, while the other one keeps out. Therefore, the whole system acts as first order system for a large K_P, for instance K_P = 100, where a high bandwidth is obtained but a small steady-state error can be seen due to the effect of a small value of K_i.

On the other hand, if the value of the K_P assume to be constant, for instance 5, and then the value of the Ki increase from 200 to 1000 and the eigenvalues of the system include imaginary part; see Fig. 7.

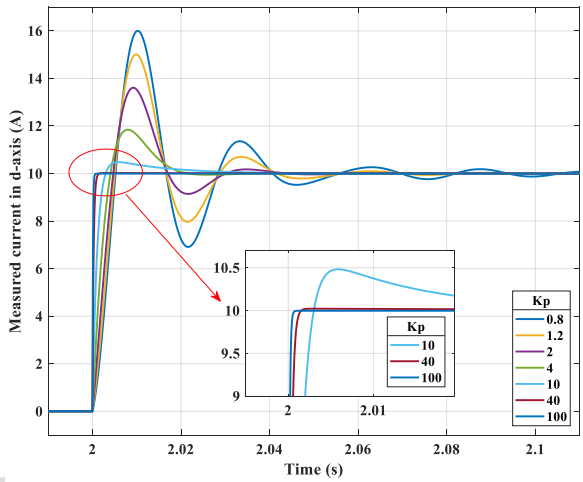

Fig. 5. Step response of the current control in time domain simulation (Matlab). K_i=800, and K_P increasing from 0.8 to 100.

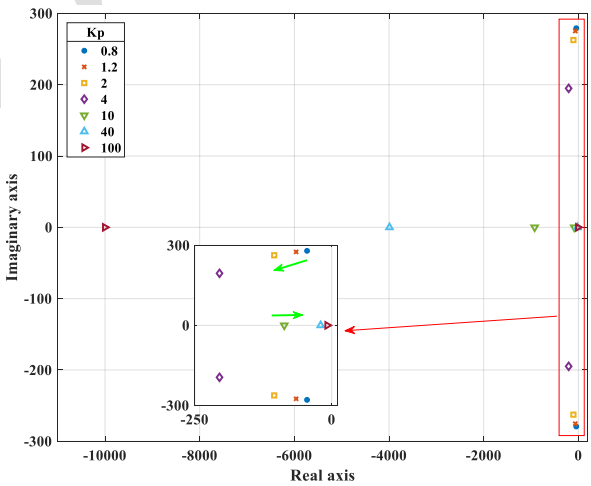

Fig. 6. Eigenvalues of the current control Ki=800, and KP increasing from 0.8 to 100 (green arrow).

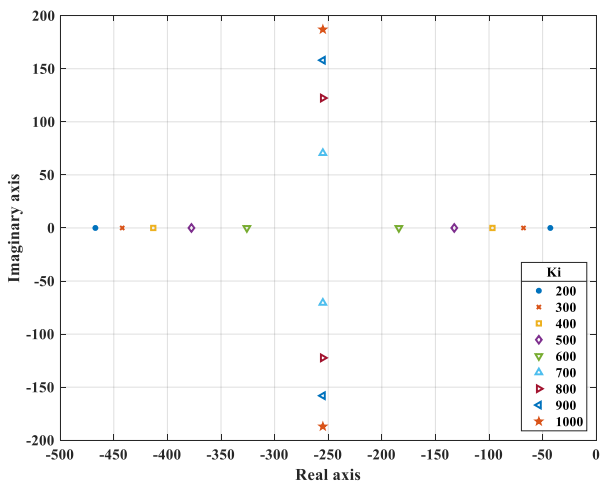

Fig. 7. Eigenvalues of the control system with K_P=5, and K_i increasing from 200 to 1000.

A recommendation for designing the controller's parameters based on the characteristic equation of the system is to choose K_P and K_i in a way that current control bandwidth becomes ten times faster than the fundamental frequency of the system. This means that if the system works in 50 Hz, then $\omega_n = 10.(2.50.\pi) = 3141$ rad/s with $\xi = 0.707$. Therefore, based on (14), $K_P = 44.31$ and $K_i = 98658$. On the other hand, $K_P.s+K_i$ in the nominator of the system characteristic equation will increase the bandwidth. By increasing the bandwidth of the system, the system works faster, although it will become more sensitive to noise signals. A very fast response in the current control is needed in the control system of the VSC. A Bode plot of the control system is shown in Fig. 8. The system bandwidth is about 6450 rad/s, which is twice the desired bandwidth.

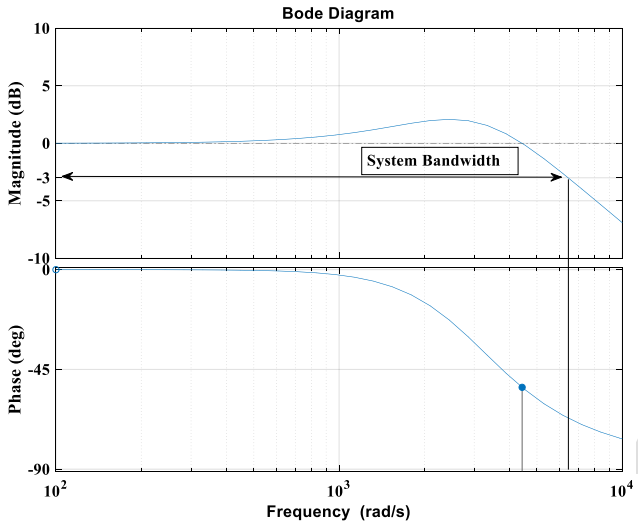

Fig. 8. Bode plot of the system control with K_P=44.31 and K_i=98658.

Although the Lyapunov method gives the status of the stability of the system, it gives no information about the bandwidth and system dynamic response assessment. Therefore, for simple control system it is more desirefull to use linear-based stability techniques such as state-space stability analysis. On the other hand, Lyapunov-based analysis gives us the boundary of the system's stability. Fig. 9. shows the stability of the current control. Consider it if the system is subjected to a disturbance and the trajectory of the state variables comes out of the stability zone, then the system will become unstable.

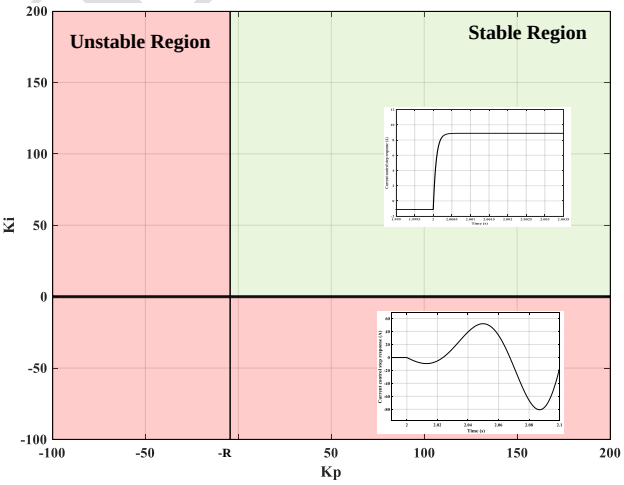

Fig. 9. Stability region for the current control of the grid connected VSC.

It is worth mentioning that the system with positive damping, $(K_P+R)>0$, is stable, even if K_P is negative. For R=0.1Ω and K_P = -0.05, the system is still stable (theoretically), as the damping part of the system is positive; see Fig. 10. $I_{d.ref}$ is set to be 10A with the step change to 15 A at t = 4s. Due to the small value of the damping ratio, it takes a while for the system to converge to the stable point. The system is theoretically stable, while it may be practically unstable, as the system limiter and protection system may act in order to protect the system from damage. If Ki is positive, then the system will only become unstable if the $K_P < -R$. In t = 8s, K_P changes from -0.05 into -0.15. This means that the total value of damping becomes negative at t = 8s, which leads the system into instability.

The eigenvalues with respect to the related K_p are illustrated in Fig. 6. Regarding to the eigenvalues for the mentioned K_P and K_i, they have real values. In addition, one of the system poles are closer to the imaginary axis, therefore the whole system acts as first order system.

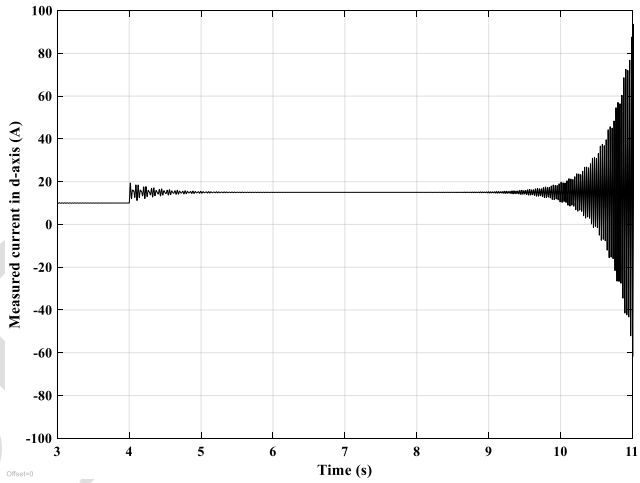

Fig. 10. Converter current (d axis) with K_P = -0.05 and R = 0.1Ω up to t = 8s and K_P = -0.15 from t = 8s. Current reference is changed from 10A to 15A at t = 4s.

V. Conclusions

In this paper, eigenvalue- and Lyapunov-based stability analysis is assessed for grid-connected VSC. It is shown that the stability margin can be obtained via both methods. Although linearized-based methods are recommended for linear models, Lyapunov-based method also gives the same results.

This paper determined a systematic recommendation in order to implement non-linear analysis method for grid-connected VSCs. PE-based power systems are non-linear in their nature. Therefore, it is more convenient to use non-linear stability models in order to obtain more accurate results.

VI. Appendix

A. Positive definite matrix

Assume G as an 2×2 matrix. Matrix G is positive definite if for any non-zero value of a and b the following equation is valid:

$$\begin{pmatrix} a & b \end{pmatrix}.G.\begin{pmatrix} a \\ b \end{pmatrix} > 0 \tag{A.1}$$

For $G = \begin{pmatrix} s_{11} & s_{12} \\ s_{21} & s_{22} \end{pmatrix}$, the following equation will be obtained:

$$a^2.s_{11} + a.b.\left(s_{12} + s_{21}\right) + b^2.s_{22} > 0 \tag{A.2}$$

The equation (A.2) is always valid if the following equations is true:

$$s_{11} > 0 \;\&\; s_{22} > 0 \;\&\; 2\sqrt{s_{11}.s_{22}} > \left|s_{12} + s_{21}\right| \tag{A.3}$$

REFERENCES

[1] F. Blaabjerg, Z. Chen, and S. B. Kjaer, "Power electronics as efficient interface in dispersed power generation systems," *IEEE Trans. Power Electron.*, vol. 19, no. 5, pp. 1184–1194, 2004.

[2] F. Blaabjerg, R. Teodorescu, M. Liserre, and A. V. Timbus, "Overview of control and grid synchronization for distributed power generation systems," *IEEE Trans. Ind. Electron.*, vol. 53, no. 5, pp. 1398–1409, 2006.

[3] J. Rocabert, A. Luna, F. Blaabjerg, and I. Paper, "Control of Power Converters in AC Microgrids," *IEEE Trans. Power Electron.*, vol. 27, no. 11, pp. 4734–4749, 2012.

[4] P. Kundur *et al.*, "Definition and Classification of Power System Stability IEEE/CIGRE Joint Task Force on Stability Terms and Definitions," *IEEE Trans. Power Syst.*, vol. 19, no. 3, pp. 1387–1401, 2004.

[5] J. Sun, "Small-signal methods for AC distributed power systems-A review," *IEEE Trans. Power Electron.*, vol. 24, no. 11, pp. 2545–2554, 2009.

[6] D. Mondal, A. Chakrabarti, and A. Sengupta, *Power System Small Signal Stability Analysis and Control*. London: Academic Press, 2014.

[7] K. Ogata, *Modern Control Engineering*, vol. 17. 2010.

[8] Y. Song and C. Breitholtz, "Nyquist Stability Analysis of an AC-Grid Connected VSC-HVDC System Using a Distributed Parameter DC Cable Model," *IEEE Trans. Power Deliv.*, vol. 31, no. 2, pp. 898–907, 2016.

[9] E. Ebrahimzadeh, S. Farhangi, H. Iman-Eini, F. Badrkhani Ajaei, and R. Iravani, "Improved Phasor Estimation Method for Dynamic Voltage Restorer Applications," *IEEE Trans. Power Deliv.*, vol. 30, no. 3, pp. 1467–1477, 2015.

[10] L. Harnefors, R. Finger, X. Wang, H. Bai, and F. Blaabjerg, "VSC Input-Admittance Modeling and Analysis above the Nyquist Frequency for Passivity-Based Stability Assessment," *IEEE Trans. Ind. Electron.*, vol. 64, no. 8, pp. 6362–6370, 2017.

[11] S. F. Zarei, H. Mokhtari, M. A. Ghasemi, and F. Blaabjerg, "Reinforcing Fault Ride Through Capability of Grid Forming Voltage Source Converters Using an Enhanced Voltage Control Scheme," *IEEE Trans. Power Deliv.*, pp. 1–1, 2018.

[12] H. K. Khalil, "Nonlinear Systems." Prentice Hall, New Jersey, p. 776, 2001.

[13] L. Barreira, *Lyapunov exponents*. Switzerland: Springer, 2017.

[14] B. J. Song and A. J. Koivo, "Nonlinear predictive control with application to manipulator with flexible forearm," *IEEE Trans. Ind. Electron.*, vol. 46, no. 5, pp. 923–932, 1999.

[15] M. Kabalan, P. Singh, and D. Niebur, "Large Signal Lyapunov-Based Stability Studies in Microgrids: A Review," *IEEE Trans. Smart Grid*, vol. 8, no. 5, pp. 2287–2295, 2017.

[16] F. Andrade, K. Kampouropoulos, L. Romeral, J. C. Vasquez, and J. M. Guerrero, "Study of large-signal stability of an inverter-based generator using a Lyapunov function," in *IECON Proceedings (Industrial Electronics Conference)*, 2014, pp. 1840–1846.

[17] V. Converters, L. Zhang, L. Harnefors, S. Member, H. Nee, and S. Member, "Power-Synchronization Control of Grid-Connected Voltage-Source Converters," *IEEE Trans. Power Syst.*, vol. 25, no. 2, pp. 809–820, 2010.

[18] P. Hart and B. Lesieutre, "Energy Function for a Grid-tied , Droop-Controlled Inverter," in *North American Power Symposium (NAPS), 2014*, 2014, pp. 1–6.

[19] H. Kömürcügil and O. Kükrer, "A novel current-control method for three-phase PWM AC/DC voltage-source converters," *IEEE Trans. Ind. Electron.*, vol. 46, no. 3, pp. 544–553, 1999.

[20] P. W. Sauer, M. A. Pai, and J. H. Chow, *Power system dynamics and stability : with synchrophasor measurement and power system toolbox*. John Wiley & Sons, Inc., 2018.