EPro

Non-contact erosion profiling

Hardware description

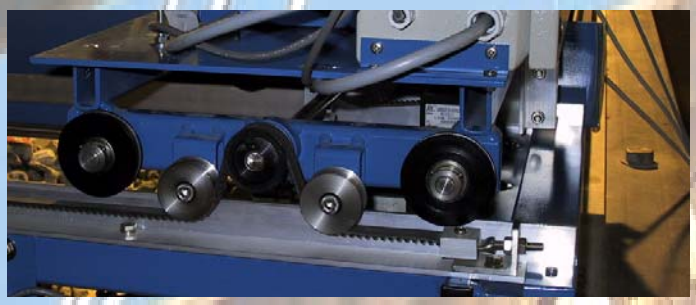

DEPARTMENT OF CIVIL ENGINEERING
AALBORG UNIVERSITY
SOHNGAARDSHOLMSVEJ 57 DK-9000 AALBORG DENMARK
TELEPHONE +45 96 35 80 80 TELEFAX +45 98 14 25 55

April 2006

DEPARTMENT OF CIVIL ENGINEERING
AALBORG UNIVERSITY
SOHNGAARDSHOLMSVEJ 57 DK-9000 AALBORG DENMARK
TELEPHONE +45 96 35 80 80 TELEFAX +45 98 14 25 55

Hydraulics and Coastal Engineering No. 41

ISSN 1603-9874

April 2006

EPro
Non-contact erosion profiling

Hardware overview

By

Palle Meinert
Aalborg Universitet

EPro hardware

EPro is a profiler controlled by software, which is constructed to measure the same surface or work piece multiple times and track changes due to erosion. The profiler operates in a non-contact manner utilizing a laser to make the measurements and is able to operate even if the target is more or less under water. Compared to manually measuring, the profiler saves manpower and increases the number of possible measure points due to its speed.

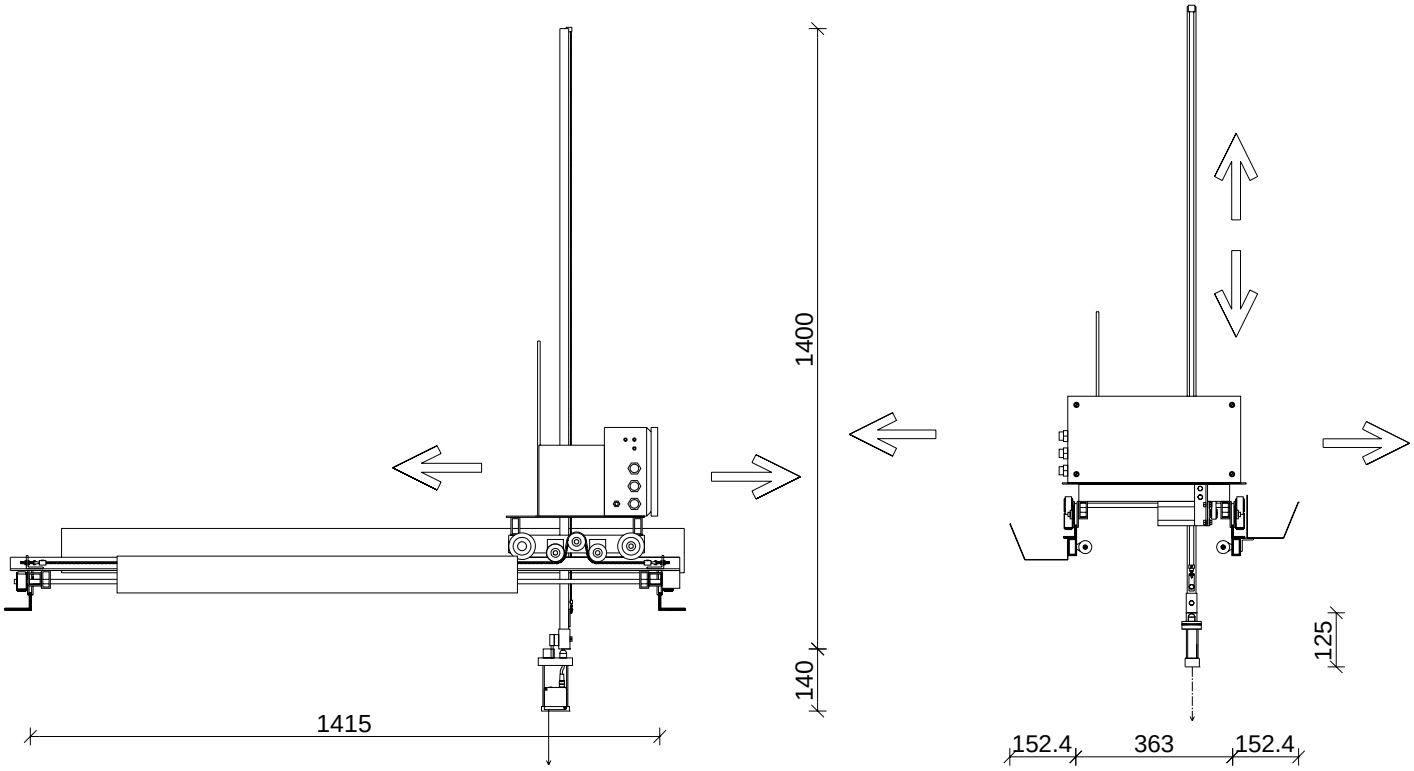

Figure 1 Drawings of profilers three degrees of freedom

The profiler is constructed to have three degrees of freedom:

- forward/backward
- left/right
- up/down

This enables the profiler to position the laser at any given position in a 3D-space.

Each axis is controlled by high precision step-motors, capable of a movement resolution less than 1mm. The precision is preserved by tooth-belts, which prevents any slipping during movement.

To secure stability and ease friction, horizontal movement is done on rails and vertical movement is stabilised by plastic wheels.

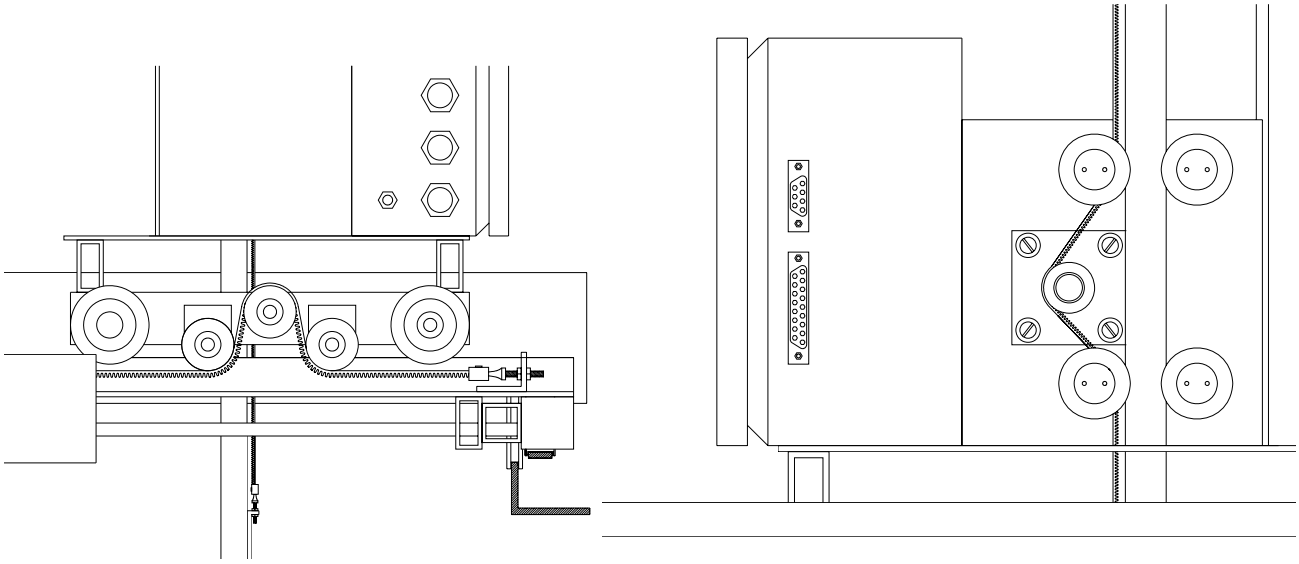

Figure 2 rails for stability and low friction, tooth belts maintain precision during movement

A laser mounted at the end of the vertical rod carries out the non-contact measurements. In order for the laser to get any readings, the profiler must keep it in a distance of the target, which is within the lasers working-range. Since refraction of laser light in water differs from its refraction in air, the lasers working-range also varies depending on whether the measurement is performed above or below water level.

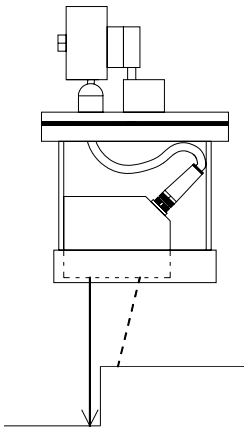

Figure 3 Laser enclosed in a waterproof housing

Granted that the water is clean enough for the laser to go through it, the working range is larger under water. The working range of the currently used laser is as following:

- Above still water level: 55 – 256mm
- Below still water level: 76 – 343mm

With a stationary still water level and a minimum of interfering light, the laser is also capable of measurements through the water-surface. The resulting working-range will be a mixture of the above stated ranges, depending on the distance from laser to water-surface.

The profiler connects to the controlling computer through a com-port for motor-control and a USB-port for data-acquisition. These ports are very common today and therefore the EPro profiler can be controlled by almost any computer (even notebooks) without installing additional hardware.