Improved coal grinding and fuel flow control in thermal power plants

Niemczyk, Piotr; Bendtsen, Jan Dimon

Published in:
Proceedings of the 18th IFAC World Congress, 2011

Publication date:
2011

Document Version
Early version, also known as pre-print

Improved coal grinding and fuel flow control in thermal power plants

Piotr Niemczyk * **Jan D. Bendtsen** *

* *Department of Electronic Systems, Aalborg University, Fr. Bajers Vej 7C, 9220 Aalborg Øst, Denmark (e-mail: {pn,dimon}@es.aau.dk).*

Abstract: A novel controller for coal circulation and pulverized coal flow in a coal mill is proposed. The design is based on optimal control theory for bilinear systems with additional integral action. The states are estimated from the grinding power consumption and the amount of coal accumulated in the mill by employing a special variant of a Luenberger observer. The controller uses the rotating classifier to improve the dynamical performance of the overall system. The proposed controller is compared with a PID-type controller with available pulverized coal flow measurements under nominal conditions as well as when parameter uncertainties and noise are present. The proposed controller lowers the grinding power consumption while in most cases exhibiting superior performance in comparison with the PID controller.

1. INTRODUCTION

Thermal power plants are responsible for significant parts of electricity generation throughout the world. With the constantly increasing generation from renewable forms of energy their role will remain valuable, but the operation conditions are changing. There will be more emphasis on the dynamical properties of power plants in the near feature, as they will need to assure the balance between generation and consumption on the grid. In countries where hydro power cannot be used for balancing the stochastic nature of in particular wind generation, conventional power plants will need to handle the regulation task.

At the moment, coal units are not preferred to be used when a sudden increase of demand is required; oil and natural gas units are used instead due to better fuel control. Even though oil and plants where pulverized coal is used have similar design, oil units can handle two times larger production gradients than coal, mostly due to the conservative coal mill control strategies employed. There is thus a need to improve the existing control of the grinding process and fuel flow to achieve better flexibility of such units. Furthermore, coal grinding consumes significant amounts of energy and hence it is desired to optimize the process ensuring higher overall plant efficiency.

1.1 Coal pulverization

There exist a few types of coal pulverizers among which ball-race and vertical spindle roller types are the most often used. The principle of operation of both mils are similar, so only the roller mill is described (Figure 1).

In the pulverization process, the raw coal is dropped from a bunker onto a feeder belt and is transported to the coal mill. The mass feed flow is controllable as the belt's speed can be alternated. The coal falls onto a rotating table inside the mill. Rollers crush the coal into powder and the fine particles are picked up by primary air, which enters the mill from the bottom. The primary air is heated, so that it can dry the coal, which initially contains a few percent of moisture. Coal particles are transported with the air upwards toward the outlet pipes. Heavy particles, whose size is too large, drop and fall back onto the table for regrinding. In many cases there is an additional rotating classifier installed whose role is to reject some of the particles. By controlling the speed of rotation it is possible to influence the size of particle that can escape the mill and hence influence the fuel flow out of the mill to the burners. This fact is used in the controller design in the paper.

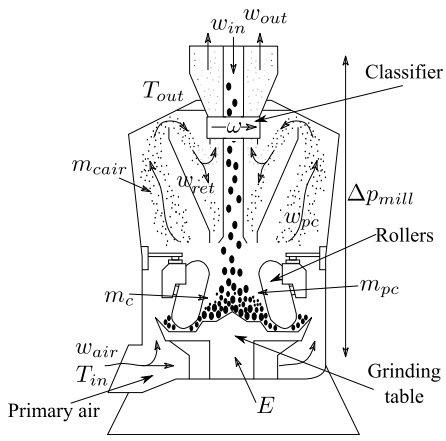

Fig. 1. Overview of the coal pulverization process [Kitto and Stultz, 2005] and the nomenclature used in the paper.

Probably most of the existing mill controllers in the power industry are based on the simplest first and third order models of coal pulverization process [Austin, 1971, Neal et al., 1980, Bollinger and Snowden, 1983]. Such controllers are relatively easy to tune to yield mediocre performance; however, such standards are no longer advantageous or profitable. According to Rees [1997] a performance close to that of oil fired power plants can be achieved with improved coal mill control.

In addition to the prevalent PID-type strategies implemented in plants, other control methods have been studied, for example Cao and Rees [1995], Cai et al. [1999], O'Kelly [1997], Palizban et al. [1995]. Rees and Fan [2003] discussed the most prevalent control strategies for the coal mills and investigated the advantages of fuel flow measurements. Andersen et al. [2006] proposed an observer based cascade control concept with the use of Kalman filter to estimate the pulverized fuel flow from the oxygen measurements of combustion air flow.

An improved control strategy, based on model based control principles, requires a well defined and accurate, but not overly complex model of the system. Such models have been proposed by Kersting [1984], Fan and Rees [1994], Palizban et al. [1995], Rees and Fan [2003], and recently Wei et al. [2007] proposed an interesting simplified model that could be used for this purpose. That model has been further refined and extended by Niemczyk et al. [2009], to include the influence of angular velocity of classifier on the coal circulation and the fuel flow out of the mill.

The grinding power consumption, which is dependent on the amount of coal on the table, and the differential pressure across the mill are well measured. However, the most important information about the fuel flow is typically not available. The pulverized coal flow sensors have been under development for some time [Department of Trade and Industry, 2001]. Recent work at Danish power plants shows that it is possible to use the existing flow sensors for the closed loop control. Dahl-Sørensen and Solberg [2009] presented results on this topic showing how sensor fusion using Kalman filter techniques can be employed to overcome sensor problems and obtain reliable fuel flow estimates. The relation between mill's differential pressure, the primary air flow, and the mass of coal in the mill is highly nonlinear and very difficult to model, hence, this relation is not used in the proposed controller design.

1.2 Methods

The model utilized in this paper is taken from Niemczyk et al. [2009]. Only the coal circulation equations are used and the control of the heat balance is neglected at this point since those parts are decoupled. The model assumes that the coal particles are of two sizes, raw coal and pulverized coal. In fact the raw coal includes particles that have been rejected by the classifier and need to be ground again. The equations form a third order bilinear MIMO system and hence control suitable design procedures for such systems are used.

The state estimation is based on theoretical work on the observer design for bilinear systems with bounded input by Derese et al. [1979], and the controller for the pulverizer is based on the work on optimal stabilizing controllers for bilinear systems by Benallou et al. [1988]. The controller assures global asymptotic stability, contrary to linear feedback control for such systems [Derese and Noldus, 1980]. It also outperforms the linear controller as it utilizes the knowledge of bilinear matrices, N_i.

1.3 Contributions

We present a novel control strategy for the coal pulverization process which is based on the optimal control for bilinear systems with additional integral actions for removing the steady state errors. The proposed strategy facilitates a special type of observer suitable for such system. Active classifier control is used, which lowers power consumption of the grinding process. It is assumed that fairly accurate fuel flow estimation is possible [Dahl-Sørensen and Solberg, 2009], as it is needed to calculate how much coal is accumulated in a mill. The proposed strategy is compared with a PID control with fuel flow available for the feedback.

2. COAL PULVERIZER MODEL

As described in Niemczyk et al. [2009] the coal circulation in a pulverizer is described by the third order model restated here in equations (1), (2), and (3). The mass of coal on the grinding table consists of coal to be ground, $m_c(t)$, and pulverized coal, $m_{pc}(t)$. The unground coal consists of the raw coal supplied by the feeder belt and coal rejected in the classification process. The mass of pulverized coal on the table is dependent on the grinding rate. Mass of coal suspended in the pneumatic transport, $m_{cair}(t)$ is influenced by the primary air flow with fine coal particles from the table, $w_{pc}(t)$, and the classification process.

$$\frac{d}{dt}m_c(t) = w_{in}(t) + w_{ret}(t) - k_1 m_c(t) \tag{1}$$

$$\frac{d}{dt}m_{pc}(t) = k_1 m_c(t) - w_{pc}(t) \tag{2}$$

$$\frac{d}{dt}m_{cair}(t) = w_{pc}(t) - w_{out}(t) - w_{ret}(t) \tag{3}$$

Equations (4), (5), and (6) describe the mass flows used in the preceding equations. The return flow of coal, $w_{ret}(t)$, depends on the amount of coal suspended in the air. The flow of fine coal from the table, $w_{pc}(t)$, depends on the amount of pulverized coal and the primary air flow through the mill. The fuel flow, $w_{out}(t)$, depends on the mass of coal carried by the primary air, $m_{cair}(t)$, and the angular velocity of classifier, $\omega(t)$.

$$w_{ret}(t) = k_7 m_{cair}(t) \tag{4}$$

$$w_{pc}(t) = k_5 w_{air}(t) m_{pc}(t) \tag{5}$$

$$w_{out}(t) = k_4 m_{cair}(t)\left(1 - \frac{\omega(t)}{k_6}\right) \tag{6}$$

The parameters of the model were determined with the use of Differential Evolution algorithm, which proved to be efficient. More details on the model, parameter identification and validation can be found in Niemczyk et al. [2009].

From the above equations a state space model of a coal pulverizer in a form of a bilinear system (7) is acquired; $x \in \mathbb{R}^n$ are the states of the system, and $u \in \mathbb{R}^m$ are the controlled inputs. In this case the inputs are the mass flow of raw coal, $u_1(t) = w_{in}(t)$, mass flow of the primary

air, $u_2(t) = w_{air}(t)$, and the angular velocity of classifier, $u_3(t) = \omega(t)$.

$$\dot{x} = Ax + \sum_{i=1}^{m} u_i N_i x + Bu = Ax + \sum_{i=1}^{m} u_i b_i(x) \quad (7)$$

where

$$b_i(x) = N_i x + B_i$$

and B_i is the i-th column of matrix B.

The state matrices in (7) can be identified from the following state equations.

$$\begin{aligned} \dot{x}_1 &= -k_1 x_1 + k_7 x_3 + u_1 \\ \dot{x}_2 &= k_1 x_1 - k_5 x_2 u_2 \\ \dot{x}_3 &= k_5 x_2 u_2 - k_4 \left(1 - \frac{u_3}{k_6}\right) x_3 - k_7 x_3 \\ \dot{x}_4 &= \kappa(-x_4 + u_2) \end{aligned} \quad (8)$$

The last equation describes the primary air flow through the mill and is needed to control the fuel to air ratio.

The grinding power consumption, which is used by the controller, is expressed as

$$E(t) = k_2 m_{pc}(t) + k_3 m_c(t) + E_e \quad (9)$$

where E_e is the constant power need for running an empty mill.

2.1 Nominal control

Before the design is carried out, the state equations are transformed to obtain a system with Hurwitz state matrix A. Such procedure simplifies further considerations. We use the fact, that prior to the mill operation, a start-up procedure is performed. During this procedure, the primary air is blown through the mill in order to heat it up and swipe out the remaining coal particles. The angular velocity of the classifier is controlled to the nominal value of operation. In the following discussions we use the term nominal inputs, for the preinitialized air flow and angular velocity, and we label them as $\bar{u}$ ($\bar{u}_2 = 17.5$ [kg/s] and $\bar{u}_3 = 1.5$ [rad/s]). New control inputs are thus

$$\begin{aligned} v_1(t) &= u_1(t) \\ v_2(t) &= u_2(t) - \bar{u}_2 \\ v_3(t) &= u_3(t) - \bar{u}_3 \end{aligned} \quad (10)$$

and the state equations are changed accordingly (constant terms such as $k_5 \bar{u}_2 x_2(t)$ are added). The redesign procedure changes the input operating ranges to $v_2 \in [-17.5, 17.5]$ [kg/s] and $v_3 \in [-0.2, 0.2]$ [rad/s]. The classifier speed of rotation is limited to prohibit too large particles exiting the mill.

3. OBSERVER

This section recalls observer design procedure proposed in Derese et al. [1979].

The considered observer is constructed in a similar way as the classical reduced order Luenberger observer. We have a copy of the system with a linear correction term (11). A block diagram of the observer is depicted in Fig. 2.

$$\dot{\hat{x}} = A\hat{x} + \sum_{i=1}^{m} v_i N_i \hat{x} + Bv + H(y - C\hat{x}) \quad (11)$$

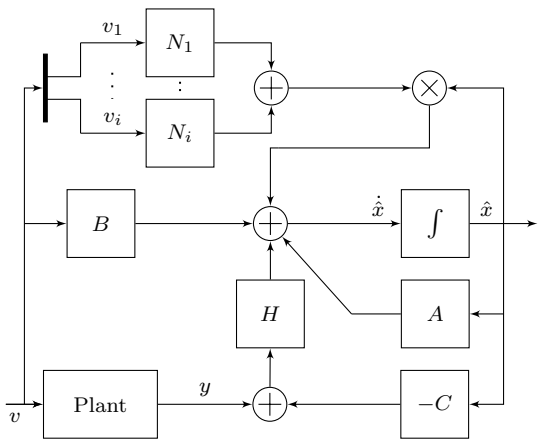

Fig. 2. A block diagram of the observer structure.

With the observation error defined as $e = \hat{x} - x$ it is straightforward to see that

$$\dot{e} = (A - HC)e + w \quad (12)$$

where $w = \sum_{i=1}^{m} v_i N_i e$ is an input dependent disturbance. We seek an upper bound, S, on this term in order to prove the convergence of the observer in the case of largest admissible disturbance (13).

$$w^T w = e^T \left(\sum_{i=1}^{m} v_i(t) N_i^T\right) \left(\sum_{i=1}^{m} v_1(t) N_i\right) e \leq e^T S e, \quad \forall_t \quad (13)$$

where $S = S^T \geq 0$ is a constant matrix.

Disturbance w is input dependent, hence, it is necessary to determine the input bounds $v_i \in [\underline{v_i}, \overline{v_i}]$.

Stability of equation (12) can be analyzed using quadratic Lyapunov equation $V(e) = e^T P_o e$, with $P_o = P_o^T > 0$; the condition

$$P_o(A - HC) + (A - HC)^T P_o + P_o^2 + S < 0 \quad (14)$$

The observer feedback matrix H is chosen to have the form $H = \frac{1}{2} P_o^{-1} C^T R_o$ with $R_o = R_o^T > 0$. The above considerations lead to

$$A^T P_o + P_o A + P_o^2 > Q_o \quad (15)$$

with $Q_o = C^T R_o C - S$.

Derese et al. demonstrate that it is sufficient to choose $R_o = \frac{1}{\theta} I$, with varying θ, for an exhaustive search of positive definite solutions for the chosen class of feedback matrices. In this case θ becomes a tuning parameter in the design process.

4. OPTIMAL CONTROL

As mentioned previously the controller is based on the article by Benallou et al. [1988] which is a special case of the result presented by Jacobson [1976].

Theorem 1. Benallou et al. [1988] There exists an optimal control policy v_i^* $(i = 1, \ldots, m)$ for a bilinear system (7) with Hurwitz matrix A, which asymptotically stabilizes the system and minimizes the performance index:

$$J = \frac{1}{2} \int_0^\infty (x^T Q x + \sum_{i=1}^{m} \frac{1}{r_i} [x^T P b_i(x)]^2 + v^T R v) dt \quad (16)$$

Matrix R is diagonal with positive entries; Q and P are positive definite symmetric matrices which satisfy the Lyapunov equation

$$PA + A^T P = -Q \tag{17}$$

The proof to the above theorem can be found in the original paper. It is important to note that the assumption on matrix A being Hurwitz is due to the fact that unique solution to (17) in such case.

The design procedure is straightforward Benallou et al. [1988]:

(1) Choose a symmetric positive definite matrix Q that weighs the state vector.
(2) Choose a diagonal weighting matrix R for the control inputs.
(3) Solve Lyapunov equation $PA + A^T P = -Q$.
(4) Obtain the optimal control law $v_i^* = -\frac{1}{r_i} x^T P(N_i x + B_i)$, where B_i is the i-th column of B.

5. APPLICATION TO COAL MILL CONTROL

In the remaining sections, the steps necessary to apply the presented theory for a coal mill are discussed. Numerical values and simulation results are presented based on coal mill parameters identified in Niemczyk et al. [2009] from actual power plant data (Table 1).

k_1	k_2	k_3	k_4	k_5	k_6	k_7
0.0487	0.1409	0.0104	0.8148	0.0062	2.7855	0.5604

Table 1. Model parameters used in the observer and controller design.

5.1 Observer

A prerequisite for the observer design is that the pair of matrices A and C is observable. The equation describing the power consumption (9) can remain almost unchanged, only the constant value E_e is subtracted. It is, however, necessary to choose the second output carefully. The fuel flow equation (6) is nonlinear, and it is not possible to use it directly in the observer design. The fuel flow measurements can be used to obtain information on how much coal is accumulated in the mill according to (18).

$$\begin{aligned} m_t(\tau) &= \int_0^\tau (w_{in}(t) - w_{out}(t))dt \\ &= m_c(\tau) + m_{pc}(\tau) + m_{cair}(\tau) \end{aligned} \tag{18}$$

The chosen outputs have linear form

$$\begin{aligned} y_1(t) &= E(t) - E_e \\ y_2(t) &= m_c(t) + m_{pc}(t) + m_{cair}(t) \end{aligned} \tag{19}$$

yielding the output matrix C

$$C = \begin{bmatrix} k_3 & k_2 & 0 \\ 1 & 1 & 1 \end{bmatrix} \tag{20}$$

which together with the state matrix A forms an observable system.

Input dependent observer disturbance w is calculated according to (13) by inputting the largest control values. As for the N_i matrices, the parameter uncertainties should be accounted for, and values corresponding to the largest norms should be chosen.

$$S = \sum_{i=1}^{3} \bar{v}_{i,max}^2 \bar{N}_i^T \bar{N}_i \approx \begin{bmatrix} 0 & 0 & 0 \\ 0 & 0.029 & 0 \\ 0 & 0 & 0.005 \end{bmatrix} \tag{21}$$

The observer parameter is chosen to be $\theta = 2.5\ 10^{-3}$. Solving equations (15) and (22) the observer feedback matrix is determined to be

$$H = \begin{bmatrix} -4.5 & 6.7 \\ 7.8 & 5.6 \\ -2.4 & 5.0 \end{bmatrix} \tag{22}$$

5.2 Controller

The proposed controller uses state estimates determined by the observer. For practical reasons it was necessary to introduce an external integral control action. The overall structure of the system with controller is depicted in Figure 3.

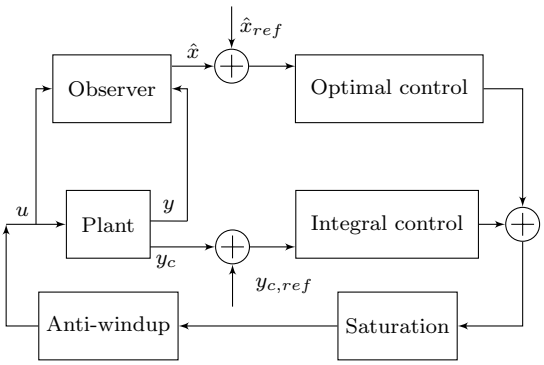

Fig. 3. A block diagram of the proposed controller. y is the plant measurements, y_c is the controlled outputs, and $\hat{x}$ is the state estimates.

The controller parameters used for verification are summarized below.

$$Q = \begin{bmatrix} 10^{-4} & 0 & 0 & 0 \\ 0 & 2\ 10^{-4} & 0 & 0 \\ 0 & 0 & 1.5\ 10^{-2} & 0 \\ 0 & 0 & 0 & 4.89 \end{bmatrix} \tag{23}$$

$$R = \begin{bmatrix} 6.7\ 10^{-3} & 0 & 0 \\ 0 & 2.2\ 10^{-3} & 0 \\ 0 & 0 & 3.3\ 10^{-1} \end{bmatrix} \tag{24}$$

	w_{out}	w_{air}	ω
I gain	0.25	0.05	0.0001
back-calculation coefficient	0.04	0.02	0.0001

The proposed control strategy is compared with a PID-type control well-tuned around a realistic operating point of the mill. The main loop is closed from the fuel flow to the input flow of raw coal. The primary air mass flow is controlled to follow the air to fuel ratio of $\rho = 2.5$. The classifier speed, in this case, is kept constant at the nominal speed of rotation.

5.3 Parameter uncertainties

A Monte Carlo simulation with 1000 samples is carried out to analyze the performance of both controllers under parameter uncertainties. Such information on the control sensitivity is vital and it may affect the ability of implementation in a plant. Large parameter uncertainties pose significant problems in the control of coal mills. They are induced by many factors, such as variations in coal quality and moisture, and machine wear.

We perturb all model parameters randomly (uniform distribution) in the range of ± 10 [%] from the nominal values. Controllers operate in the same conditions with equal parameter perturbations, and the same noise levels. Three main factors are analyzed: error of reference tracking

$$J_{fe} = \int_0^{t_2} e_f^2(t)dt \tag{25}$$

with $e_f(t) = w_{out}(t) - w_{out,ref}(t)$; the total amount of energy consumed by the mill

$$J_E = \int_0^{t_2} (E(t) - E_e)dt \tag{26}$$

where E_e is the power required for turning an empty grinding table; and the chocking hazard (total amount of coal in the mill)

$$J_c = \int_0^{t_2} (m_c(t) + m_{pc}(t) + m_{cair}(t))dt \tag{27}$$

The measurements and the inputs are affected by a white noise with standard deviations σ_i equal to half percent of the nominal value of the signal. The sample time of the noise generator is 10 seconds.

The controller is verified using an augmented plant model, which includes actuator dynamics modeled as first order systems. The constants for the feeder belt, the primary air mass flow, and the angular velocity of classifier are $k_{fb} = 10$, $k_{pa} = 2$, $k_{cl} = 1$. Such augmentation introduces nonlinearities, however, the dynamics are quite likely to occur in the plant.

$$\begin{aligned} \dot{v}_1 &= \frac{1}{k_{fb}}(-x_4 + v_1) \\ \dot{v}_2 &= \frac{1}{k_{pa}}(-x_5 + v_2) \\ \dot{v}_3 &= \frac{1}{k_{cl}}(-x_6 + v_3) \end{aligned} \tag{28}$$

Figure 4 depicts the simulated fuel flow with both controllers along with the reference signals, and the absolute error. The reference signal is chosen to consist of various step and ramp signals within the whole operating region.

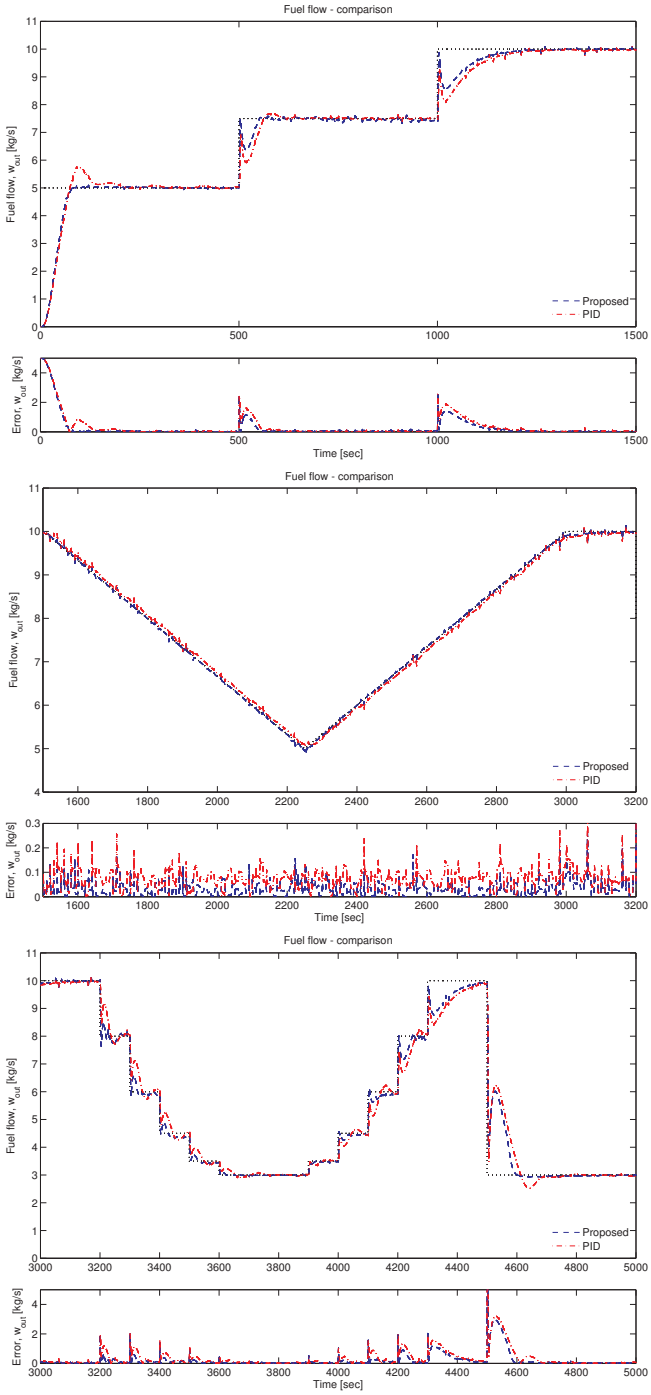

Fig. 4. Simulation results from performance verification of the controllers. The above simulations are performed in a noise free environment and with nominal parameter values.

6. CONCLUSION

In this paper we propose a novel control strategy for power plant coal mills established from results on observer and optimal control designs for bilinear systems.

The proposed control strategy minimizes the grinding power consumption while ensuring accurate fuel reference tracking. With well estimated plant parameters the controller ensures superior performance in comparison to a well-tuned PID-type control with fuel flow measurements. It provides better fuel flow tracking and is more efficient in terms of power consumption. Those advantages are mostly attributed to the active control of the classifier which could also be applied with the PID scheme. The drawback of the method is the performance deterioration in the presence of significant parameter uncertainties, which is to be expected from optimal-control-inspired schemes. The performance of the PID-type controller is very consistent even when parameters of the plant change, however, this

		J_{fe}		J_E		J_c	
		σ	μ	σ	μ	σ	μ
Proposed	nominal	1		1		1	
	uncertain	1.58	0.41	1.02	0.11	1.02	0.09
PID	nominal	2.16		1.06		1.07	
	uncertain	2.18	0.22	1.07	0.10	1.08	0.08

Table 2. The results are normalized with respect to the nominal performance of the proposed controller. Mean and standard deviation are calculated based on Monte Carlo analysis.

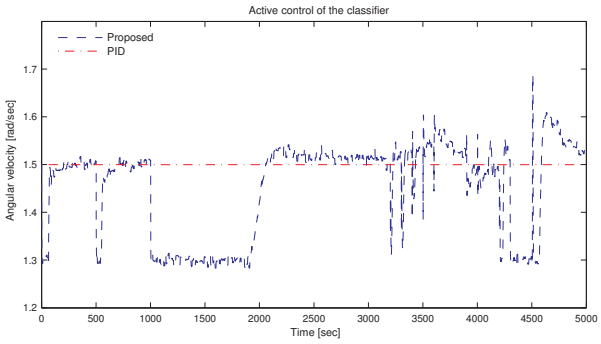

Fig. 5. Active classifier control versus nominal speed of rotation with the use of PID-type controller.

might not be the case for large parameters k_4, k_5, and k_6, which affect the bilinear matrices.

One weakness of the work presented in this paper is the lack of separation between observer and control design. In the future, we intend to investigate designs that facilitate separate observer and controller designs for this type of systems, which still provide adequate performance.

ACKNOWLEDGEMENTS

The authors would like to thank prof. Anders P. Ravn form the Department of Computer Science, Aalborg University for the valuable comments. Special thanks to Mathias Dahl-Soerensen, PhD, and Brian Solberg, PhD, from DONG Energy for the support, information on the measurement equipment and the plant data.

REFERENCES

P. Andersen, J.D. Bendtsen, T.S. Pedersen, J.H. Mortensen, and R.J. Nielsen. Observer-based coal mill control using oxygen measurements. In *IFAC Symposium on Power Plants and Power Systems Control*, 2006.

L.G. Austin. Introduction to the mathematical description of grinding as a rate process. *Powder Technology*, 5(1): 1–17, 1971. ISSN 0032-5910.

A. Benallou, D. A. Mellichamp, and D. E. Seborg. Optimal stabilizing controllers for bilinear systems. *International Journal of Control*, 48(4):1487–1501, 1988.

K.E. Bollinger and H.R. Snowden. The experimental determination of coal mill models. PAS-102(6):1473–1477, 1983. ISSN 0018-9510.

J. Cai, D. Lu, and P. Wang. Advanced control for coal mill. In *14th Triennial World Congress*, Beijing, China, 1999.

S.G. Cao and N.W. Rees. Fuzzy logic control of vertical spindle mills. In *IFAC Power Plant and Power Systems*, Cancun, Mexico, December 1995.

M.J. Dahl-Sørensen and B. Solberg. Pulverized fuel control using biased flow measurements. In *Proceedings of the IFAC Symposium on Power Plants and Power Systems Control*, Tampere, Finland, July 2009.

Department of Trade and Industry. Pulverised fuel (pf) flow measurement and control methods for utility boilers. Technology Status Report 014, London, United Kingdom, January 2001.

I. Derese and E. Noldus. Design of linear feedback laws for bilinear systems. *International Journal of Control*, 31(31):219–237, 1980.

I. Derese, P. Stevens, and E. Noldus. Observers for bilinear system with bounded input. *International Journal of Systems Science*, 10(6):649–668, 1979.

G.Q. Fan and N.W. Rees. Modelling of vertical spindle mills in coal fired power plants. In *Proceedings of Electrical Engineering Congress*, Sydney, Australia, 24-30 November 1994.

D. H. Jacobson. Stabilization and optimal control of nonlinear systems homogeneous-in-the-input. In *Directions in large-scale systems, many-person optimization and decentralized control (Proc. Sympos., Wakefield, Mass., 1975)*, pages 389–399. Plenum, New York, 1976.

F.J. Kersting. Mathematical model of a roller mill for fuel grinding and drying in coal-fired power stations. *Aufbereitungs-Technik*, 10:563–571, 1984.

J.B. Kitto and S.C. Stultz, editors. *Steam - its generation and use*. The Babcock and Wilcox Company, 2005. ISBN 0-387-36895-7.

P. W. Neal, J. Waddington, and R.G. Wilson. Determination of mill and boiler characteristics and their effect on steam pressure control. *Chem. Eng. Sci.*, 35(10):2107–2114, 1980.

P. Niemczyk, P. Andersen, J.D. Bendtsen, T.S. Pedersen, and A.P. Ravn. Derivation and validation of a coal mill model for control. In *Proceedings of IFAC Symposium on Power Plants and Power Systems Control*, Tampere, Finland, June 2009.

P.A. O'Kelly. Synthesis of advanced mill control. In *IFAC/CIGRE Symposium on Control of Power System and Power Plants*, pages 208–213, Beijing, Aug 1997.

H.A. Palizban, P.A. O'Kelly, and N.W. Rees. Practical optimal predictive control of power plant coal mills. In *IFAC Control of Power Plants and Power Systems*, 1995.

N.W. Rees. Advanced power plant control for large load changes and disturbances. In *Proceedings of the IFAC/CIGRE Symposium on Control of Power Systems and Power Plants, Beijing, China, 18-21 August*, 1997.

N.W. Rees and G.Q. Fan. Modelling and control of pulverised fuel coal mills. In D. Flynn, editor, *Thermal Power Plant Simulation and Control*, pages 63–99. Institution of Electrical Engineers, 2003.

J.L. Wei, J. Wang, and Q.H. Wu. Development of a multisegment coal mill model using an evolutionary computation technique. *IEEE Transactions on Energy Conversion*, 22(3):718–727, September 2007.