Large eddy simulation of one diffusion swirling flame

Yang, Yang; Kær, Søren Knudsen; Yin, Chungen

Publication date:
2011

Document Version
Accepted author manuscript, peer reviewed version

European Combustion Meeting 2011

Large eddy simulation of one diffusion swirling flame

Yang YANG, Søren Knudsen Kær, Chungen YIN
Department of Energy Technology, Aalborg University, Denmark

Introduction

Stabilized combustion is widely used when the flame needs to be anchored at a desired location and is resistant to flash back, lift off or blow off in operating range. There are two aerodynamic ways, one is to stabilize flame in the wake of bluff-body, and one is to stabilize flame in the low-velocity region of swirling flow. Here report one numerical study of a diffusion flame with both two mechanisms. This research chose one middle swirling case (SM1) from Sydney swirling flame series.

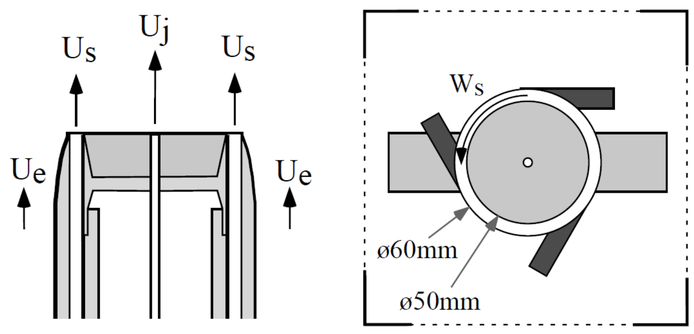

structure of Sydney swirl burner

This burner is built up base on a bluff-body burner with diameter D=50mm. Swirling flow, which is generated aerodynamically upstream, comes out from annular exhaust with width d=5mm. Fuel jet comes from central hole in bluff-body with diameter d'=3.6mm. Velocity and composition measurements are resolved separately in several cross sections. Main properties of SM1 are summarized in table below.

key features of SM1 case

Case	Fuel	U_j (m/s)	U_s (m/s)	W_s (m/s)	U_e (m/s)	S	Re_j	Re_s
SM1	methane	32.7	38.2	19.1	20	0.5	7200	75900

Numerical method

This research use large eddy simulation (LES) in software ANASYS FLUENT. Simulation domain is a cylinder with diameter of 200mm and length of 240mm. It starts from the exit of the burner. Hexahedral grid divides the domain as spatial filter in implicit LES. There are total 2.42M cells. The size of the cell is decided by Kolmogorov scale from previous RANS results. Pave mesh is used in central region while the stretching is less than 8% in the environment flow field. Complex velocity inlet is used for fuel-jet and swirling flow: 1/7-power law profile with turbulent profile (turb-kinetic-energy and turb-diss-rate). Spectral synthesizer method is used to generate pseudo-fluctuation. Discretization scheme used in LES has second order. Numerical models are summarized below.

models used in LES

Closure term	Sub-grid scale	chemistry	Turb.-chem. interaction
model	Dynamic Smagorinsky-Lilly	16 species	Probability density function (PDF)
		GRI-2.11	Steady flamelet

Reference

[1] *Dinesh, K., Jenkins, K.W., Kirkpatrick, M.P., Malalasekera, W.: Modelling of instabilities in turbulent swirling flames. Fuel 89(1), 10-18.* [2] *El-Asrag, H., Menon, S.: Large eddy simulation of bluff-body stabilized swirling non-premixed flames. Proc. Combust. Inst. 31, 1747-1754 (2007).* [3] *Kempf, A., Malalasekera, W., Ranga-Dinesh, K.K.J., Stein, O.: Large Eddy Simulations of Swirling Non-premixed Flames With Flamelet Models: A Comparison of Numerical Methods. Flow Turbul. Combust. 81(4), 523-561 (2008).* [4] *Malalasekera, W., Ranga-Dinesh, K.K.J., Ibrahim, S.S., Masri, A.R.: LES of recirculation and vortex breakdown in swirling flames. Combust. Sci. Technol. 180(5), 809-832 (2008).* [5] *Malalasekera, W., Ranga-Dinesh, K.K.J., Ibrahim, S.S., Masri, A.R.: LES of recirculation and vortex breakdown in swirling flames. Combust. Sci. Technol. 180(5), 809-832 (2008).* [6] *Masri, A.R., Kalt, P.A.M., Al-Abdeli, Y.M., Barlow, R.S.: Turbulence-chemistry interactions in non-premixed swirling flames. Combustion Theory and Modelling 11(5), 653-673 (2007).* [7] *Masri, A.R.K., P. A. M. Al-Abdeli, Y. M. Barlow, R. S.: Turbulence–chemistry interactions in non-premixed swirling flames. Combustion Theory and Modelling 11(5), 21 (2007).* [8] *Swirl Flows and Flames Database. University of Sydney. http://sydney.edu.au/engineering/aeromech/thermofluids/swirl.htm (2002).* [9] *Nogenmyr, K.J., Petersson, P., Bai, X.S., Fureby, C., Collin, R., Lantz, A., Linne, M., Alden, M.: Structure and stabilization mechanism of a stratified premixed low swirl flame. Proc. Combust. Inst. 33, 1567-1574.* [10] *Olbricht, C., Ketelheun, A., Hahn, F., Janicka, J.: Assessing the Predictive Capabilities of Combustion LES as Applied to the Sydney Flame Series. Flow Turbul. Combust. 85(3-4), 513-547.*

Acknowledgements

This research is supported by DONG Energy [PSO2007-7333].

Results

Validation study

Ensemble average and root-mean-square (RMS) results are shown below. Statistical results covered physical time of 75ms. Selected cross-sections locate in two low-velocity regions. Considerable agreement is achieved except some deviations in the swirling low-velocity region. Good agreement of mixture fraction proves conserved scalar is resolved accurately even use simple model.

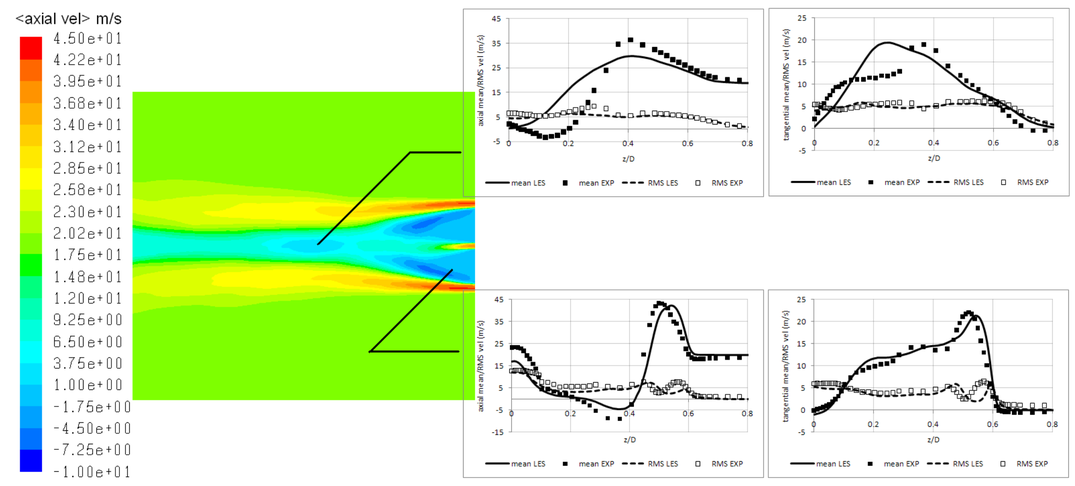

Mean axial velocity contour and validation results (mean and RMS of axial and tangential velocity) in two cross-sections

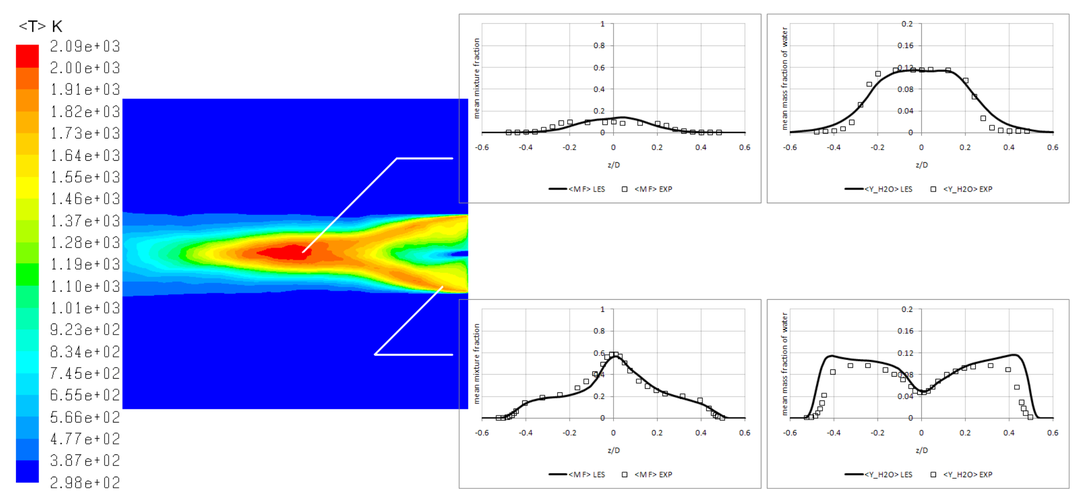

Mean temperature contour and validation results (mean mixture fraction and mass fraction of water) in two cross-sections

Instantaneous field

Qualitative description of flame shows below using contour plot of temperature. Black line indicates instantaneous stoichiometric mixture fraction. The right one uses GRI-2.11 chemistry model and steady flamelet model. The left one uses simple chemistry and interaction model.

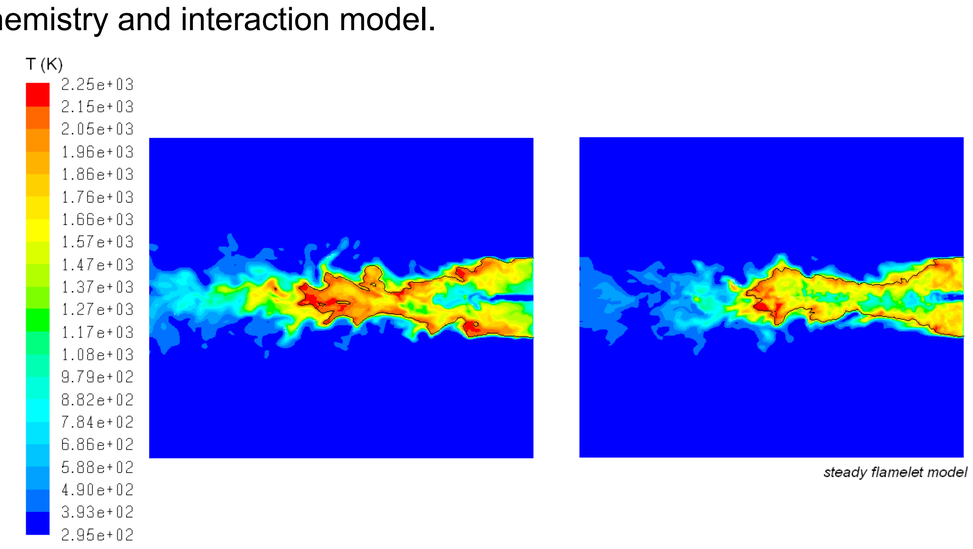

Different interaction models show similar flame location and length. High-temperature combustion mainly happen just outside the swirling low-velocity region.

Conclusion

LES successfully predicted swirling flame case SM1.
Detail flow structure could be identified by combining various methods.
Future work will focus on improving accuracy and understanding flame dynamics.

Contact
Department of Energy Technology, Aalborg University
9220 Aalborg, Denmark
Yang Yang, Søren Knudsen Kær and Chungen Yin
yya, skk, chy@et.aau.dk