Methanol Reformer System Modeling and Control using an Adaptive Neuro-Fuzzy Inference System approach

Justesen, Kristian Kjær; Ehmsen, Mikkel Præstholm; Andersen, John; Andreasen, Søren Juhl; Shaker, Hamid Reza; Sahlin, Simon Lennart

Publication date:
2012

Document Version
Accepted author manuscript, peer reviewed version

Methanol Reformer System Modeling and Control using an Adaptive Neuro-Fuzzy Inference System approach

Kristian K. Justesen, John Andersen, Mikkel P. Ehmsen, Søren J. Andreasen*, Hamid R. Shaker and Simon L. Sahlin

Department of Energy Technology, Aalborg University, Pontoppidanstræde 101, 9220 Aalborg East, Denmark

Introduction

This work presents a control strategy for a reformed methanol fuel cell system, which uses a reformer to produce hydrogen for a HTPEM fuel cell. Such systems can advantageously be used as a range extender in an electric car, where a liquid fuel is a great advantage as opposed to storing compressed or liquid hydrogen. The energy required for reforming is provided by a catalytic burner, which uses the excess hydrogen of the fuel cell. Figure 1 shows the reformer and fuel cell system implemented with the system of the electric vehicle.

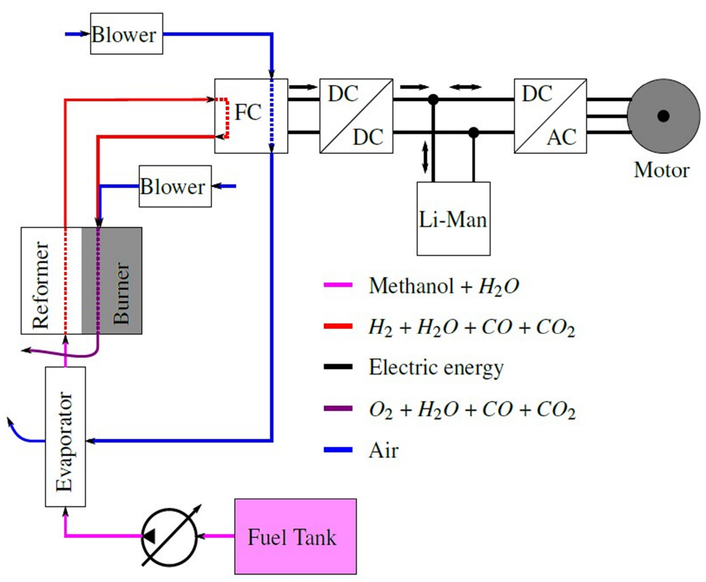

Figure 1: Conceptual drawing of the methanol fuel reformer, the fuel cell system and the existing electrical system of an electric vehicle.

The presented method for controlling the reformer temperature is named *Current Correction Temperature Control (CCTC).* It manipulates the fuel cell current to control the flow of hydrogen to the burner instead of the conventional control method which is to superimpose a cooling flow on the burner process air.

Modeling

A dynamic model is derived and implemented in MATLAB® Simulink to assess the performance of the reformer and fuel cell system. The temperatures of the components are modeled as the energy balance of a lumped thermal mass. The energy flows between the components are modeled based on temperature difference between the components, and the mass flows and specific heat capacities of the fluids.

The output of the electric fuel cell model is dependent on the composition of the gas entering the fuel cell. An estimator for the reformate gas is therefore developed using *Adaptive Neuro-Fuzzy Inference Systems* (ANFIS). Figure 2 shows the general structure of the ANFIS approach.

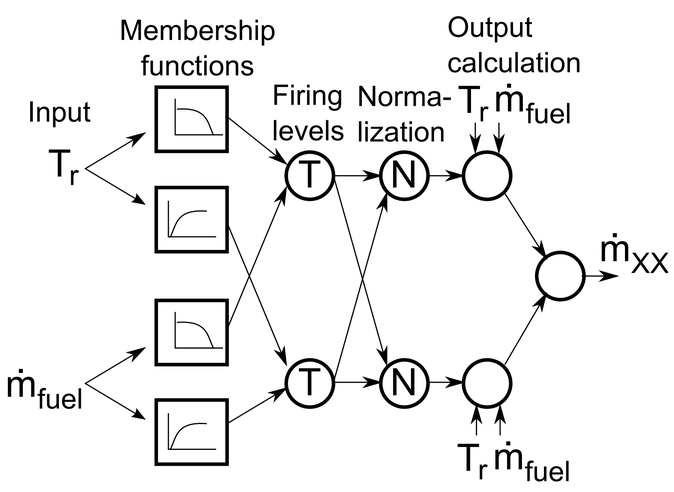

Figure 2: ANFIS model structure with two membership functions. T marks the use of a T-norm and N marks the normalization of the firing levels.

ANFIS is a neuro-fuzzy modeling approach which uses linguistic variables and parameters which are trained using a neural network to mimic the behavior of a physical system. Arbitrary precision can be achieved by increasing the complexity of the models. The ANFIS function in MATLAB is used to train the ANFIS models in this work.

Four ANFIS models, which uses the temperature of the reformer and the fuel flow as inputs, are trained on data acquired from laboratory tests. The reformer temperature and fuel flow used in the experiments sweeps the entire operating range of the reformer. The output of the four ANFIS models are:

$\dot{m}_{CO}$ – *The carbon monoxide mass flow*
$\dot{m}_{CH_3OH,s}$ – *The methanol slip mass flow*
$\dot{m}_{H_2}$ – *The hydrogen mass flow*
$\dot{m}_{CO_2}$ – *The carbon dioxide mass flow*

Figure 3 shows the inputs used in the experiments as well as the measured CO mass flow and that predicted by the ANFIS model.

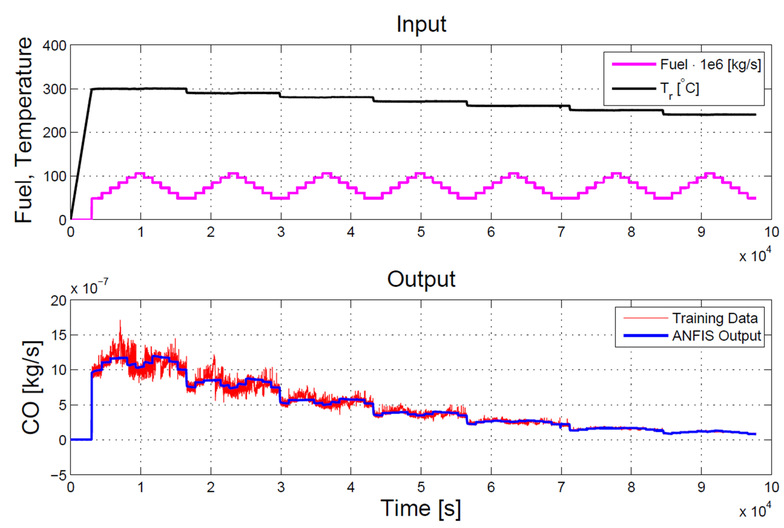

Figure 3: Output of ANFIS model for carbon monoxide content in the reformate gas. Inputs are reformer temperature, T_r, and the fuel flow.

The data from the experiments is very noisy but the ANFIS training handles the noise well and the output of the ANFIS system follows the mean value of the test data.

Control

An overview of the CCTC method is seen in Figure 4. The reformer temperature is controlled by changing the fuel cell current and thereby the amount of excess hydrogen sent from the fuel cell to the burner.

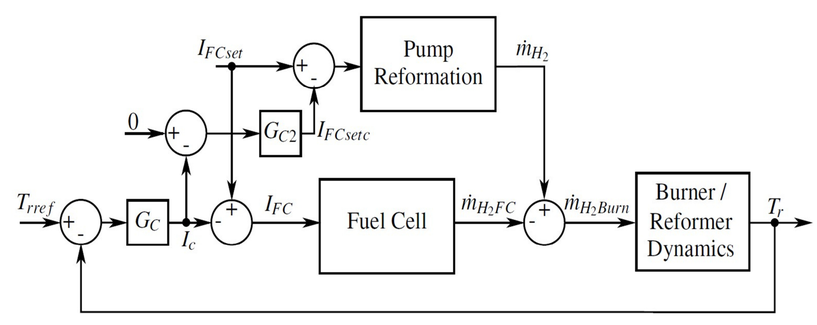

Figure 4: Conceptual overview of the CCTC method, with the temperature controller G_C, and the fuel flow controller G_{C2}.

The temperature controller G_C, is a PI controller, with the output saturated at ±5[A] for the analyzed system. The system is used as a battery charger and the fuel cell current can therefore be different to the reference for short periods of time. This is however not desirable over a long time period. A fuel flow controller G_{C2} consisting of only an integral part, is therefore implemented as an outer control loop, which changes the fuel flow to make the correction current go to zero.

Figure 5 shows the reformer temperature, fuel cell stoichiometry and correction current during a step change in the reformer temperature.

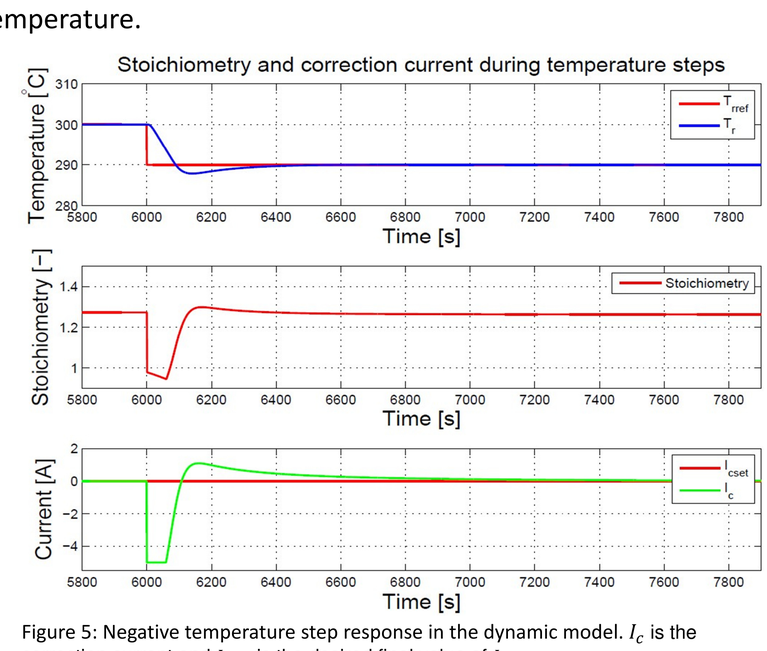

Figure 5: Negative temperature step response in the dynamic model. I_c is the correction current and I_{cset} is the desired final value of I_c.

The reformer temperature reaches its new set point in a stable manner and the correction current is driven to zero over time. The fuel cell stoichiometry, however, falls below 1.2 which is generally considered a safe minimum and even below 1, resulting in fuel cell starvation. A dynamic saturation of the correction current is therefore implemented, using the predicted hydrogen mass flow from the ANFIS model. Figure 6 shows the same temperature step, but with dynamic correction current saturation. The rise time is slower, but the stoichiometry is kept above 1.2 as desired.

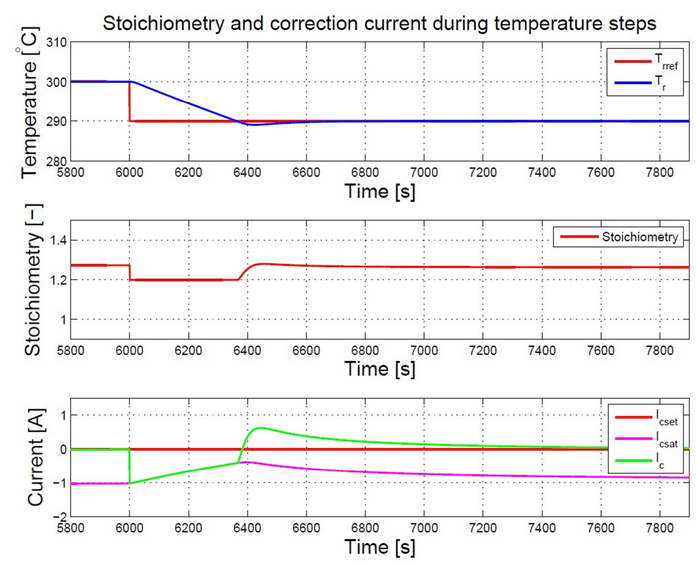

Figure 6: Negative temperature step response in the dynamic model. Here I_{csat} is the dynamic correction current saturation limit.

The fuel flow controller slowly adjusts the pump flow until the desired output current is achieved with the smallest possible fuel flow for the system. This is the case when the correction current is equal to zero.

Conclusion

In this work an alternative reformer temperature controller using CCTC, with ANFIS hydrogen predictor allowing for a more precise anode stoichiometry control has been proposed. The performance has been verified using a dynamic model, which was verified experimentally on data obtained from a reformer from the Serenergy® H3-350, ver. 1.65.

The system efficiency, defined as the electric output power of the fuel cell divided by the Higher Heating Value of the fuel used, has been evaluated in the dynamic model. The highest efficiency, evaluated at different temperatures, was found to be at a reformer temperature of 290°C and a fuel cell temperature of 180°C.

The system efficiency was found to be improved from 0.286 to 0.321 when compared with conventional blower control. This constitutes an improvement of 12.3%.

Future Work

Future work will include implementing and testing the CCTC method. The controller will include the developed ANFIS model to be used as a hydrogen mass flow predictor. The future test setup will be based on the mobile battery charger, *H3-350*, manufactured by Serenergy®. The battery charger, seen in Figure 7, has an integrated fuel processing unit and accepts external control of the system.

Figure 7: Mobile battery charger H3-350 manufactured by Serenergy®, with integrated fuel processing unit.

Future works also include further improvement of the dynamic model with more detailed physical models of the heat transfer between the components. The control method, and the improved model, is expected to allow for fast changes in load, and improve the overall system efficiency.

*sja@et.aau.dk