Evaporator unit as a benchmark for plug and play and fault tolerant control

Izadi-Zamanabadi, Roozbeh; Vinther, Kasper; Mojallali, Hamed ; Rasmussen, Henrik; Stoustrup, Jakob

Published in:
8th IFAC Symposium on Fault Detection, Supervision and Safety of Technical Processes

DOI (link to publication from Publisher):
10.3182/20120829-3-MX-2028.00107

Publication date:
2012

Document Version
Early version, also known as pre-print

Evaporator unit as a benchmark for Plug and Play and fault tolerant control ⋆

Roozbeh Izadi-Zamanabadi *,*** **Kasper Vinther** ***
Hamed Mojallali ** **Henrik Rasmussen** *** **Jakob Stoustrup** ***

* *Danfoss A/S, Nordborgvej 81, DK-6430 Nordborg, Denmark (e-mail: roozbeh@ danfoss.com).*
** *Faculty of Engineering, University of Guilan, P.O. Box: 41635-3756, Iran (e-mail: mojallali@guilan.ac.ir)*
*** *Department of Electronic Systems, Section of Automation and Control, Aalborg University, Aalborg, Denmark, (e-mail: riz,kv, hr, jakob@es.aau.dk)*

Abstract: This paper presents a challenging industrial benchmark for implementation of control strategies under realistic working conditions. The developed control strategies should perform in a plug & play manner, i.e. adapt to varying working conditions, optimize their performance, and provide fault tolerance. A fault tolerant strategy is needed to deal with a faulty sensor measurement of the evaporation pressure. The design and algorithmic challenges in the control of an evaporator include: unknown model parameters, large parameter variations, varying loads, and external discrete phenomena such as compressor switch on/off or abrupt change in compressor speed.

NOMENCLATURE

L_e	Total length of the evaporator
l_e	length of the evaporator two phase zone
$\dot{m}_i$	refrigerant mass flow rate at evaporator inlet
$\dot{m}_o$	refrigerant mass flow rate at evaporator outlet
h_i	specific enthalpy at evaporator inlet
h_o	specific enthalpy at evaporator outlet
h_g	specific enthalpy at end of two phase section
h_{lge}	specific evaporation energy of the refrigerant
T_e	refrigerant boiling temperature
T_o	refrigerant (gas) temp. at evap. outlet
T_w	evaporator wall temperature
P_e	refrigerant pressure at the evaporator
P_c	condensation pressure
f_{comp}	compressor speed
T_{sh}	Superheat temperature
$T_{air,in}$	temperature of the air into the evaporator
$T_{air,out}$	temperature of the air after the evaporator
OD	Opening Degree of the expansion valve
ρ_g	density of the refrigerant in gas form
ρ_l	density of the refrigerant in liquid form
α_i	heat transfer coefficient, refrigerant to air
c_p	constant pressure specific heat of the refrigerant
c_{air}	specific heat capacity of air
$\dot{m}_{air}$	air mass flow rate

1. INTRODUCTION

The areas of fault diagnosis and fault-tolerant control has been subject to intense research in the past three decades resulting in a large amount of well-developed theoretical methods and approaches (Chen and Patton [1998], Gertler [1998], Blanke et al. [2010], Isermann [2006]). To evaluate the theoretical achievements a number of benchmarks have been proposed, to mention a few: Blanke et al. [1995], Blanke and Patton [1995], Izadi-Zamanabadi and Blanke [1998], Bartys and de las Heras [2003], Syfert et al. [2003], Odgaard et al. [2009] (see also Isermann and Ballé [1997]). Such benchmarks are necessary in order to adapt the proposed methods so that they can perform under realistic situations. However, the number of suggested benchmarks has been limited due to the practical challenges that need be solved/ addressed. In this paper we propose a new benchmark that has its own distinctions; It is related to an application that is also employed in home appliances, i.e. residential air condition (RAC) units. Such units are mass produced in different mechanical configurations and dimensions and offered by a large number of producers. Due to the high level of competition in this area and the production volume there is an intense focus on the production costs that consequently affects the number of devices that is used to control various parts of such units. So, no necessary (or additional) sensor/acuator is used unless there is a specific requirement for such devices, for instance safety requirements. Consequently, since the number of used sensors for the control purposes is already minimal, additional efforts are needed to develop and implement a fault tolerant control strategy. The proposed benchmark is the evaporator unit of a RAC, which essentially comprises of an evaporator, an electrical expansion valve (the actuator), a temperature sensor which measures the refrigerant's temperature at the outlet of the evaporator, a pressure sensor that measures the evaporation pressure and the corresponding control unit, as it is shown in Fig. 1. Although the proposed benchmark seems to be small, the existing control configuration alone provides a design challenge. The production of a RAC unit acts typically in accordance with the following pattern: A local vendor

⋆ This work was supported by Danfoss A/S.

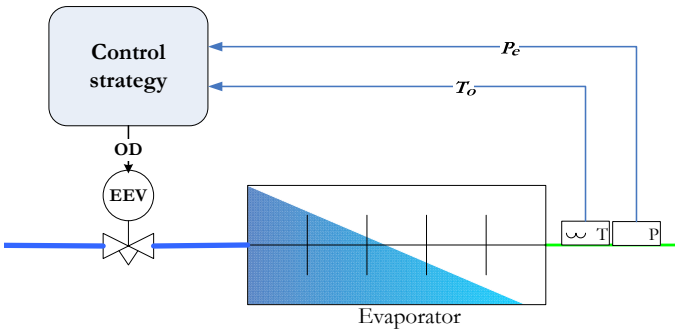

Fig. 1. The controller configuration for an evaporator unit.

purchases (or manufactures) mechanical parts of the RAC unit and purchases control instrumentation (and compressor unit) from other producers. The employed controllers need to be set by an electrician (may even be from a third company). That will result in additional costs which justify an effort to develop "intelligence and adaption". The controller should set its own parameters in the initial start-up, adjust them to the current operating point, and reconfigure itself in order to deal with a failure in the pressure measurement device.

The rest of the paper is organized as follows. The physical setup is described in Section 2. Section 3 contains appropriate models for evaporator, expansion valve, and compressor. Real life dynamic behaviour of the temperatures is discussed in section 4. Information about available models, data, and useful information is given in section 5. Section 6 outlines the typical scenario that leads to employment of a fault-tolerant control strategy. Control challenges are explained in section 7. In sections 8 and 9 different scenarios, the tests procedures and the evaluation criteria are explained.

2. THE PHYSICAL SETUP

The considered system, as mentioned in the previous section, is a residential air condition (RAC) setup which is located in Danfoss' refrigeration lab. Fig. 2 illustrates the layout of the complete system. A locally developed data acquisition, monitoring and control program called Minilog is used to monitor and control various parts of the system. However, the sensor/actuator devices in the evaporator unit are separately connected to a Matlab XPC ®. This enables design and test of different control strategies in a fast and convenient manner by using Matlab's Simulink toolbox. As it is shown in Fig. 3 there are two (in fact three) control/monitoring units that are connected to the benchmark; Matlab XPC is used to control the superheat, Minilog is used for data acquisition and monitoring and a modbus toolbox is attached to the drive that controls the compressor unit (not shown in the figure).

3. MODEL FOR CONTROL

A model for the relevant components in the benchmark is derived in the following. It should be noted that the model is derived such that it is appropriate for control / diagnosis purposes. To derive the dynamic equations for the model, the following references have been consulted: He et al. [1998], Rasmussen et al. [2006], Rasmussen and Larsen [2011].

3.1 The expansion valve

The refrigerant mass flow through the valve is modeled by:

$$\dot{m}_i = OD\alpha\sqrt{P_c - P_e}, \tag{1}$$

where OD is the opening degree of the expansion valve ($0 \leq OD \leq 1$). The characteristics of the mass flow $\dot{m}(kg/s)$ through the valve as a function of OD is also obtained through experiments and can be described empirically by the following polynomial function:

$$\begin{aligned}\dot{m}_i &= f_{OD}(OD)\\ &= a_1 + a_2 OD + a_3 OD^2 + a_4 OD^3 + a_5 OD^4,\end{aligned} \tag{2}$$

with $a_1 = -0.009689, a_2 = 0.2236, a_3 = -0.4178$, $a_4 = 0.4546$, and $a_5 = -0.1573$.

3.2 Compressor

Assuming that the compressor functions as an ideal pump, with the volume of V_{comp}, then the mass flow model can be represented as:

$$\dot{m}_o = \rho_g\ V_{comp} f_{comp}, \tag{3}$$

It is assumed that the suction pressure in the used operating conditions is proportional to the vapor density. Accordingly, Eqn. (3) can be formulated as:

$$\dot{m}_o = \alpha_{comp} P_e f_{comp}, \tag{4}$$

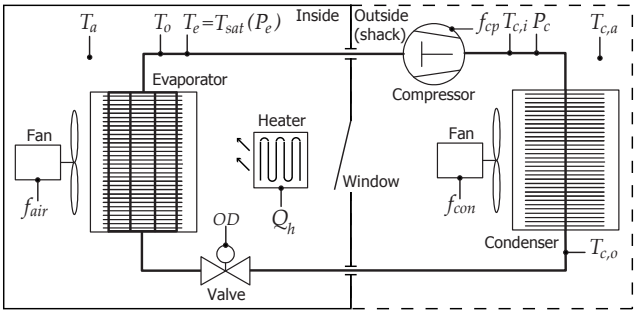

Fig. 2. The layout of the considered RAC benchmark.

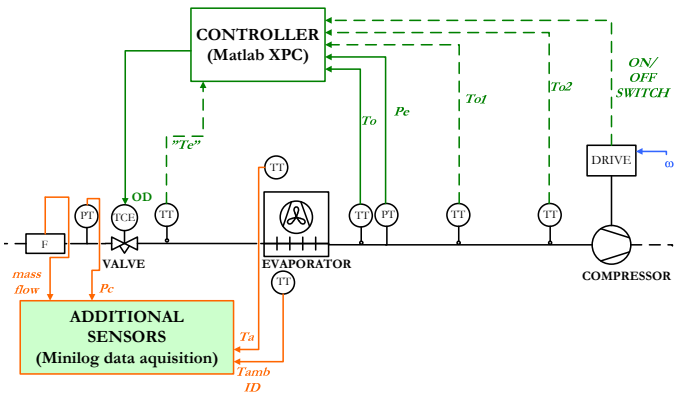

Fig. 3. The system setup for control and monitoring of the benchmark. The signals with the dashed line are used as additional signals for the purpose of verifying the main signals and securing safety conditions.

with constant α_{comp}. The relation between the evaporation temperature, T_e, and the pressure of the refrigerant, P_e, is given by an injective function $P_e = P_{bub,T}(T_e)$ leading to

$$\dot{m}_o = \alpha_{comp} P_{bub,T}(T_e) f_{comp}, \tag{5}$$

where $P_{bub,T}$ is the bubble point pressure as a function of temperature (see Skovrup [2000]).

3.3 Evaporator

Assuming that the suction pressure is constant (or changing very slowly) the energy balance in the two phase section of the evaporator can be described by (He et al. [1998], Rasmussen et al. [2006]):

$$A(1-\overline{\gamma}))\frac{dl_e}{dt} = \frac{\dot{m}_i(h_l - h_g) - \alpha_i \pi D_i l_e (T_w - T_e)}{\rho_l h_l - \rho_g h_g} \tag{6}$$

where A, is the cross-sectional area of the evaporator tube, $\overline{\gamma}$ is the mean void fraction, ρ_l and h_l (resp. ρ_g and h_g) are the saturated liquid (resp. vapor) densities and specific enthalpies. D_i is the inner diameter of the tube, and α_i is the heat transfer coefficient. The first term in the numerator on the right side corresponds to the difference between the energy of the refrigerant leaving the two phase section and the refrigerant's energy when entering the evaporator. The second term in the numerator shows the rate of the heat that is transferred from the wall to the refrigerant. Assuming that the average filling of the liquid refrigerant is given by $(1-\overline{\gamma})$, the left hand side describes the change in the energy content of the refrigerant in the two phase section. The left hand side can further be simplified by assuming

$$\rho_l h_l - \rho_g h_g = \rho_l h_{lg}, \tag{7}$$

where h_{lg} represents enthalpy of the refrigerant in liquid/gas mixture.
Assuming that the power loss is minimal, the energy flow from the wall to refrigerant can be approximately set equal to the loss of energy in the air passing over the evaporator, i.e.

$$\alpha_i \pi D_i l_e (T_w - T_e)/h_{lg} \cong \underbrace{\dot{m}_{air} c_{air} (T_{air,in} - T_{air,out})}_{\dot{Q}_{air\to wall}}. \tag{8}$$

Let X_0 represent the gas/liquid mass ratio approximated by $(h_l - h_g)/h_{lg}$, then the refrigerant mass entering the evaporator (per time unit) can be described by $(1-X_0)\dot{m}_i$. The total power transferred from air to the refrigerant is $c_{air}\dot{m}_{air}\Delta T_{air}$. In steady state this power is used to evaporate the refrigerant mass entering the evaporator, i.e.

$$(1-X_0)\dot{m}_i = \frac{\Delta T_{air}}{h_{lg}}. \tag{9}$$

If $\dot{m}_i$ is increased at time t the change in the mass flow $\delta\dot{m}_i$ will first be observed in the superheat region at the time $t+L$. This means that there is a transportation delay between the opening of the expansion valve and the response in form of decreased length of the superheat region. If the variation δl_e of the two phase region is small compared to l_e a constant L can be assumed. Equation (6) can now, with the mentioned assumptions and argumentations, describe the dynamics of the two phase zone:

$$\rho_l A(1-\overline{\gamma}))\frac{dl_e}{dt} = -(1-X_0)\dot{m}_i(t-L) + \frac{\dot{Q}_{air\to wall}}{h_{lg}}. \tag{10}$$

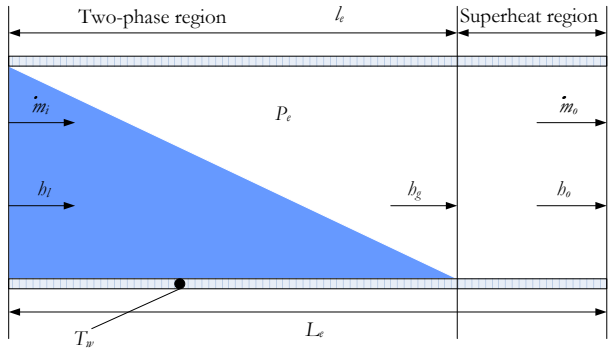

Fig. 4. Schematic of simplified evaporator cross-section.

Now setting the length of the superheat zone as (see Fig. 4)

$$l_{sh} = L_e - l_e,$$

then the dynamics of the length of the superheat zone can be described from (10):

$$\rho_l A(1-\overline{\gamma}))\frac{dl_{sh}}{dt} = (1-X_0)\dot{m}_i(t-L) - \frac{\dot{Q}_{air\to wall}}{h_{lg}}, \tag{11}$$

where the average filling of the liquid refrigerant is $(1-\overline{\gamma}))$. The gain in (6) is given by:

$$K_l = \frac{1-X_0}{A(1-\overline{\gamma}))\rho_l}. \tag{12}$$

This gain can be assumed to be nearly constant as h_l, h_g, ρ_g, ρ_l exhibit only small variations during normal operating conditions.
The length of the superheat zone can not be measured directly. However, if the axial conduction is negligible and $l_{sh} \ll l_e$ then the superheat can be expressed as:

$$T_{sh} = (T_{air,in} - T_e)[1 - \exp\{-\frac{\alpha_{io}\pi D_i (L_e - l_e)}{c_p \dot{m}_o}\}]. \tag{13}$$

The basic idea for superheat control is the following: by changing the mass flow $\dot{m}_i$ the length of the two-phase section, i.e. l_e, is changed according to (6). And by changing l_e in (13), the superheat T_{sh} will be changed.
To compute the small signal behaviour of the superheat temperature we use the following chain rule:

$$\frac{dT_{sh}}{dt} = \frac{dT_{sh}}{dl_e}\frac{dl_e}{dt},$$

which leads to:

$$\frac{dT_{sh}}{dt} = \frac{(T_{air,in} - T_e - T_{sh})\,\alpha_{io}\pi\, D_i}{c_p \alpha_{comp} P_{bub,T}(T_e) f_{comp}} \cdot \left(\frac{Q_{air\to wall}}{B} - K_l \dot{m}_i(t-L)\right), \tag{14}$$

where $B = h_{lg}\rho_l A(1-\overline{\gamma})$. Assuming that $\dot{m}_o$ is kept constant the small signal gain from $\dot{m}_i$ is given by:

$$b_1 = -\frac{(T_{air,in_0} - T_{o0})a\pi\, D_i K_l}{c_p \alpha_{comp} P_{e_0} f_{comp_0}},$$

where

$$T_{o_0} = T_{e_0} + T_{sh_0}, \tag{15}$$

is the measured temperature at the outlet of the evaporator. The index 0 in (15) refers to the stable condition around the operating point under which the measured values are obtained. Correspondingly, the small signal gain from T_{sh} is given by

$$b_0 = \frac{\alpha_{io}\pi D_i}{c_p \alpha_{comp} P_{e_0} f_{comp_0}} \left(K_l \dot{m}_{i_0} + \frac{Q_{air\to wall_0}}{B} \right).$$

The operating point is characterized by the 5-tuple $(T_{o0}, f_{comp_0}, T_{air,in_0}, P_{e_0}, \dot{m}_{i_0})$. The resulting small signal dynamic behaviour of the superheat temperature can hence be described by the following equation:

$$\frac{dT_{sh}}{dt} = b_0 T_{sh}(t) + b_1 \dot{m}_i(t-L) + d(t), \qquad (16)$$

where $d(t)$ represents the uncertainty and the influence of the other dynamic sources.

Assuming that in an operating point the variations in T_e are negligible, then the dynamic behaviour of the outlet temperature can be derived from (17):

$$\frac{dT_o}{dt} = b_0 T_o(t) + \tilde{b}_1 OD(t-L) + \tilde{d}(t), \qquad (17)$$

where $\tilde{d}(t) = d(t) + b_0 T_e$ and $\tilde{b_1} = b_1 * \frac{df_{OD}(OD)}{dOD} |_{OD_0}$, where OD_0 corresponds to the steady state opening degree that generates $\dot{m}_{i_0}$.

4. REAL LIFE TEMPERATURE BEHAVIOUR

The transfer function of the outlet temperature in Equation (17) can be, in the Laplace domain, described by a first-order-plus-dead-time (FOPDT) process model:

$$H(s) = \frac{K_p e^{-Ls}}{\tau s + 1}, \qquad (18)$$

where K_p is the lumped system gain, L is the time delay,

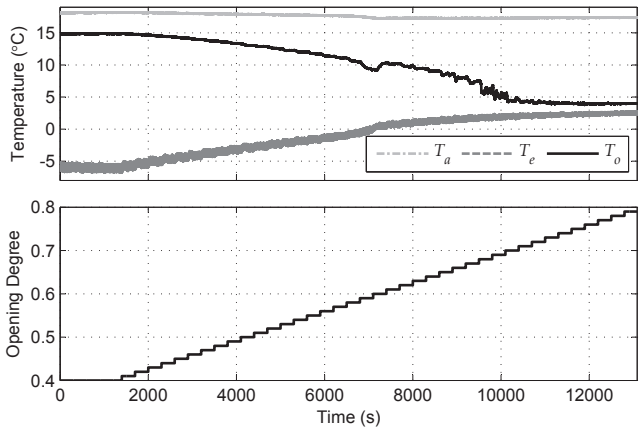

Fig. 5. The temperature profiles as a function of a sweep on the expansion valves opening degree (OD). The temperatures are air temperature T_a, Outlet temperature T_o, and evaporation temperature T_e.

and τ is the system time constant. The parameters in the derived transfer function vary depending of the current operating point. The dynamic behaviour of the outlet temperature is illustrated in Fig. 5 as a function of gradually increasing OD of the expansion valve. An investigation of the gain in the system reveals that there is a considerable change in the system gain. Fig. 6 illustrates qualitatively the characteristics of the system gain as a function of the superheat. The gain is small when either the superheat is large ($> 15K$) or it is small ($< 3K$). The later case represents the situation where the evaporator is close to fully filled and the two-zone phase of the refrigerant has reached the evaporator outlet. In practice, a measured

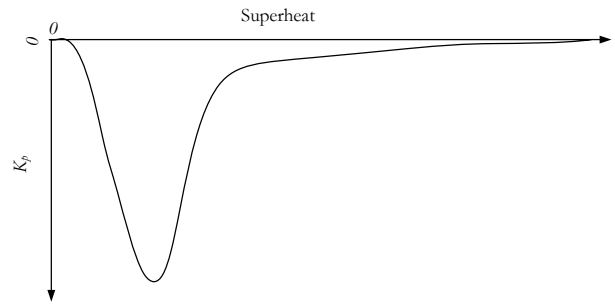

Fig. 6. The qualitative characteristics of the nonlinear gain.

superheat less than approx. 1-2 K represents the flooding situation.

A series of experiments reveal that there is a large variation in both time constant τ and the time delay L. More importantly, τ and L are dependent on the variations on OD in the following manner: Lets assume that the system is in steady state with OD_0 being the corresponding opening degree of the expansion valve that maintains T_{sh} at its defined reference set-point, $T_{sh,ref}$. Then if OD is perturbed by a ΔOD (for instance 5% increase or decrease) then depending on the sign of the chosen ΔOD both τ and L change. Change in the operating points can lead to variations that can be up to 50% of the initial values for the mentioned parameters.

5. AVAILABLE MODELS AND INFORMATION

To facilitate research activities for interested research groups relevant information/models will be available on the following URL:
http://www.es.aau.dk/projects/refrigeration/
These include:

(1) A simplified model as a combination of a nonlinear term and two FOPTD models. The nonlinear term describes the generic behaviour of T_o as illustrated in Fig. 5. The parameters' dependence on the operating point is modeled through switching between the two FOPDT models.
(2) A set of data is available so that groups can generate their own models (for initial design).
(3) Based on the derived nonlinear model a set of parameters (for the nonlinear model) will also be derived. This nonlinear model can be alternatively used for the design as well as initial tests.

The Simulink model of the simplified evaporator dynamics contains a S-function block that represents the controller. All developed strategies are expected to be designed and implemented within this block. After testing the methods on models the controller block will be transferred to the physical plant and will be tested.

6. THE MAIN SCENARIO

The main scenario, which involves utilization of fault-tolerant control strategy, is described below:

- Based on an online system identification the control algorithm identifies the system dynamics and computes and utilizes the corresponding controller parameters.

- The identified controller is used to stabilize the system and track the reference superheat.
- During the normal operation the pressure transducer fails to function. The most typical fault for these transducers is "*fail to a constant value*" , i.e. the sensor measurements "*freezes*" to the last healthy measurement prior to the sensor failure.
- After detecting the sensor failure a contingency control strategy, which uses only the remaining temperature sensor measurements, need be employed.
- The new control strategy must operate under the same operational conditions as the original control strategy, i.e. load changes, changes in compressor speed and compressor start/stop situations.

7. CONTROL CHALLENGES

Any designed control strategy should meet/address the following objectives:

- Maintain a low superheat.
- Maintain stable operation under varying operational conditions, these include:
  - Change in external ambient temperature.
  - Change in compressor speed.
- Ability to suppress disturbances and load variations.
- Ability to deal with compressor switch ON/OFF.
- Fast settling time after compressor startup.
- Avoid flooding the compressor which leads to degraded performance. In severe cases some parts of the compressor will break down. In practice, the flooding situation has occurred when the measured superheat is less than 2 K.

To elaborate more, it should be mentioned that the used compressors in residential air condition systems (RACs) are of various type; they can be of speed varying types or the switched types, where compressor speed is (abruptly) changed between two or more predefined speeds. In some compressors the oil lubrication of the compressor stops working. In such cases, the compressor controller initiates a control sequence that periodically changes the compressor speed for short periods in order to guarantee that the oil reaches the vital parts of the compressor before switching back to the original speed. From the evaporator dynamics point of view such situation generates a large disturbance.
An additional requirement is the *scalability* of the control solution: the solution is aimed at a mass-produced application, here RACs, in which the systems (products) are produced using a diversity of different components with different sizes/dimensions.

8. CONSIDERED FUNCTIONALITIES

Following functionalities are needed in order to deal with the situations and conditions that influence the design strategy:

- *Plug and Play*: The used evaporator can be of various types and dimensions which are not known in advance. The most used evaporators in the considered RAC application are of interlaced type. Changing the evaporator type and dimension leads to changes in the most involved parameters in the evaporator dynamics. For instance, when the FOPDT model of the evaporator dynamics is considered, L, K_p, and τ will all change. It is hence essential that the design strategy adopts a Plug and Play concept (see also Stoustrup [2009]).
- *Adaption and robustness*: Change in the operating conditions lead to change in system dynamics (i.e. it's parameters). Hence, the control strategy should be capable of optimizing its performance continuously. Additionally, changes in environmental conditions, such as changes in the outdoor/indoor ambient temperatures, humidity, etc.. calls for a robust solution.
- *Fault tolerance*: The pressure sensor may fail to function. In this case the controller have basically one temperature sensor, namely, T_o, to rely upon. This will be an extremely challenging situation since superheat is the difference between two measured variables, of which one is now faulty. In this case one needs to consider the qualitative characteristics of the system dynamics that is reflected in the remaining measured variable.

9. TEST AND EVALUATION PROCEDURE

The test procedure is divided in two phases as it is shown in Fig.s 7 and 8. The first test (Fig. 7) aims at evaluating the designed controller and its performance under different compressor speeds and varying heat load. Four different levels are defined for the compressor speed, namely *high*, *medium*, *low*, and *very low*. For instance, for the presented benchmark the *medium* level is defined as 40 Hz. The speed levels are not specified deliberately in order to make it possible to test the solution strategies in an alternative system with different compressor and system capacities. In both figures the change in the load is identified by the blue lines. Under normal conditions a heater provides 7 KW heat that represents the generated heat in the residence (by inhabitants, appliances, light, etc.). Each blue line indicates a change in the heat from $7KW$ to $9KW$. The second test aims at evaluating controller performance when the compressor starts and stops. It is also interesting to investigate the controller performance when the external conditions (such as temperature) has change during the compressor "switch off" period. The temperature conditions under which the solution strategies will be evaluated are as follows:

- Outdoor amb. temperature: $28 - 30\ ^oC$,
- Indoor temp.: $\sim 26\ ^oC$.

9.1 Evaluation Criteria

Following criteria will be used in order to compare the solution strategies:

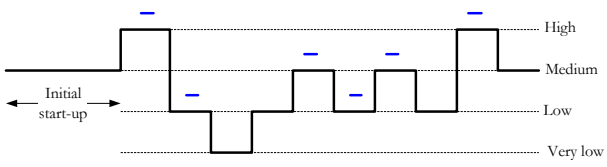

Fig. 7. The test plan showing the compressor speed change sequence. The blue lines indicate the expected change in the heat load.

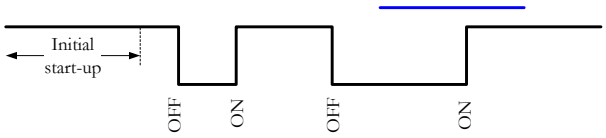

Fig. 8. The test plan 2: running under compressor start/stop with impact from load change.

- Time to settle:
  - Initial start-up phase: In this phase a control strategy should be devised so that a superheat reference $T_{sh,ref} = 6\ K$ can be tracked. It should be mentioned that the value of $T_{sh,ref}$ is system dependent and hence can be different for other applications. This phase typically involve online system identification and controller design (and then reference tracking).
  - Normal operation: the aim is to reach within 5% margin of the SH_{ref} after a change in operating conditions, for instance change in heat load and/or compressor speed.
  - Faulty condition: In the case, where the the control strategy will be based on one temperature sensor only, tracking the set-point may require introduction of dedicated perturbation signal(s). Time to settle will then be based on average computation of the measurements.
- Flooding period: The time period during which the superheat will fall below $2.5K$. It should be noted that the mentioned threshold is only valid for the considered system. The value of this threshold is dependent on the placement of the sensor on the pipe, the pipe connectivity and material, and the distance between the evaporator and the outlet temperature sensor's position on the pipe.
- Flexibility: the design strategy will be applied on an additional system (with different components) to gauge how much it adhere to the "Plug and Play" concept.
- Complexity: how much effort is required to implement the code and maintain it? - This is evaluated in cooperation with an R&D engineer with good knowledge of classical control engineering.

10. CONCLUDING REMARKS

This paper present a small but a challenging benchmark that represents the typical characteristics of high volume products that is: due to extraordinary focus on production costs minimum instrumentation is employed. Consequently, extra effort is required to achieve an added functionality in form of fault tolerance. The benchmark is an heat exchanger (an evaporator) that is employed in a residential air condition system. Fault tolerant control is required when the pressure measurement becomes faulty. The paper outlines different scenarios as well as the evaluation criteria for proposed methods. Models (linear, nonlinear), templates and additional information can be found on:
http://www.es.aau.dk/projects/refrigeration/

REFERENCES

M. Bartys and S. de las Heras. Actuator simulation of the damadics benchmark actuator system. In *In Proceedings of the IFAC Symposium Safe Process*, 2003.

M. Blanke and R. J. Patton. Industrial actuator benchmark for fault detection and isolation. *Control Engineering Practice*, 3(12):1727–1730, Dec. 1995.

M. Blanke, S. A. Bøgh, R. B. Jørgensen, and R. J. Patton. Fault detection for a diesel engine actuator - a benchmark for fdi. *Control Engineering Practice*, 3: 1731–1740, Dec. 1995.

Mogens Blanke, Michel Kinnaert, Jan Lunze, and Marcel Staroswiecki. *Diagnosis and Fault-Tolerant Control*. Springer, November 2010.

Jie Chen and R.J. Patton. *Robust Model-Based Fault Diagnosis for Dynamic Systems*. Springer;, 1998.

Janos J. Gertler. *Fault Detection and Diagnosis in Engineering Systems*. Marcel Dekker Inc., Marcel Dekker AG, Hutgasse 4, Postfach 812, CH-4001 Basel, Switzerland, 1 edition, 1998.

Xiang-Dong He, Sheng Liu, and Harry H. Asada. Multivariable control of vapor compression systems. *HVAC&R Research*, 1998.

Rolf Isermann. *Fault-Diagnosis Systems, An introduction from fault detection and fault tolerance*. Springer, 2006.

Rolf Isermann and P. Ballé. Trends in the application of model-based fault detection and diagnosis of technical processes. *Control Engineering Practice*, 5(5):709–719, 1997.

R. Izadi-Zamanabadi and M. Blanke. A ship propulsion system as a benchmark for fault-tolerant control. *Control Engineering Practice*, 1998.

Lars Finn Sloth Larsen. *Model based control of Refrigeration systems*. PhD thesis, Aalborg University, 2005.

Peter Odgaard, Jakob Stoustrup, and Michel Kinnaert, editors. *Fault tolerant control of wind turbines - a benchmark model*, number 7th in IFAC Symposium on Fault Detection, Supervision and Safety of Technical Processes, Barceona, Spain, June 2009. IFAC. doi: 10.3182/20090630-4-ES-2003.00026.

Henrik Rasmussen and Lars Finn Sloth Larsen. Non-linear and adaptive control of a refrigeration system. *IET Control Theory and Applications*, 5(2):364–378, 2011.

Henrik Rasmussen, Claus Thybo, and Lars Finn Sloth Larsen. Nonlinear superheat and evaporation temperature control of a refrigeration plant. In *IFAC ESC'06 : Energy Saving Control in Plants and Buildings*, pages 252–254. IFAC, 2006.

M. J. Skovrup. *Thermodynamic and Thermophysical Properties of Refrigerants. Ver. 3.00,*. Technical University of Denmark, 2000.

Jakob Stoustrup. Plug & play control: Control technology towards new challenges. *European Journal of Control*, 15(3-4):311–330, May-August 2009. doi: 10.3166/ejc.15.311-330.

M. Syfert, R. Patton, M. Bartys, and J. Quevedo. Development and application of methods for actuator diagnosis in industrial control systems (damadics): A benchmark study. In *Proceedings of the IFAC Symposium Safe Process*, 2003.