Message-Passing Receiver Architecture With Reduced-Complexity Channel Estimation

Badiu, Mihai Alin; Manchón, Carles Navarro; Fleury, Bernard Henri

Published in:
I E E E Communications Letters

DOI (link to publication from Publisher):
10.1109/LCOMM.2013.060513.130733

Publication date:
2013

Document Version
Early version, also known as pre-print

Message-Passing Receiver Architecture With Reduced-Complexity Channel Estimation

Mihai-Alin Badiu, Carles Navarro Manchón, and Bernard Henri Fleury, *Senior Member, IEEE*

***Abstract*—We propose an iterative receiver architecture which allows for adjusting the complexity of estimating the channel frequency response in OFDM systems. This is achieved by approximating the exact Gaussian channel model assumed in the system with a Markov model whose state-space dimension is a design parameter. We apply an inference framework combining belief propagation and the mean field approximation to a probabilistic model of the system which includes the approximate channel model. By doing so, we obtain a receiver algorithm with adjustable complexity which jointly performs channel and noise precision estimation, equalization and decoding. Simulation results show that low-complexity versions of the algorithm – obtained by selecting low state-space dimensions – can closely attain the performance of a receiver devised based on the exact channel model.**

***Index Terms*—Channel estimation, iterative algorithms, message passing, receiver design**

I. Introduction

Iterative receiver structures performing joint channel estimation, equalization and decoding (e.g., see [1]–[5]) can be designed in a unified manner by applying belief propagation (BP) [6] to the factor graph of the analyzed system. However, BP yields intractable computational complexity related to channel estimation, and thus heuristic approximations of the BP messages are typically made [2]–[5]. A more rigorous alternative to obtain tractable receivers [7], [8] consists in resorting to the region-graph method [9] pursued in [8] to devise a generic message-passing algorithm that merges BP and the mean-field (MF) approximation.

In OFDM systems, the estimation of the channel frequency response in iterative receiver schemes has a very high complexity because large matrices need to be inverted when incorporating the soft data information (as in [7] or any receiver using a data-aided LMMSE estimator). Nonetheless, compared to non-iterative receivers, the performance is significantly improved, especially when few pilot symbols are available.

In this paper, we design a message-passing OFDM receiver with adjustable channel estimation complexity. We rely on a mismatched channel model by assuming that groups of contiguous channel weights obey a Markov model whose parameters are determined by the exact Gaussian pdf in the original model. The size of the group – the state-space dimension of the Markov model – is configurable. With this assumption, we exploit local correlation and adjust the level of model mismatch by selecting the state-space dimension: the lower this dimension, the higher the model mismatch, but the lower the complexity of channel estimation.[1] In addition, noise precision estimation is included in the design. The receiver is derived in a unified manner by applying the inference framework [8] to the proposed factor graph.

II. System Model and Problem Formulation

We assume an OFDM system employing N data and M pilot subcarriers with disjoint sets of indices $\mathcal{D}$ and $\mathcal{P}$, respectively, such that $\mathcal{D}, \mathcal{P} \subseteq [1:M+N]$, $\mathcal{D} \cup \mathcal{P} = [1:M+N]$ and $\mathcal{D} \cap \mathcal{P} = \emptyset$.[2] The transmitter encodes the K information bits in $\mathbf{u} = (u_k \mid k \in [1:K])^{\mathrm{T}} \in \{0,1\}^K$ using a channel code of rate $R = K/(NL)$ and interleaves the output of the encoder into the vector $\mathbf{c} = (\mathbf{c}_n^{\mathrm{T}} \mid n \in [1:N])^{\mathrm{T}}$ of NL bits. Each subvector $\mathbf{c}_n = (c_n^{(1)}, \ldots, c_n^{(L)})^{\mathrm{T}} \in \{0,1\}^L$ with $n \in [1:N]$ is mapped to a data symbol x_{i_n}, $i_n \in \mathcal{D}$, belonging to a discrete complex modulation alphabet $\mathcal{S}_{\mathrm{D}}$ of size 2^L. The data symbols in $\mathbf{x}_{\mathrm{D}} = (x_i \mid i \in \mathcal{D})^{\mathrm{T}}$ are multiplexed with pilot symbols x_j, $j \in \mathcal{P}$, which are randomly selected from a modulation alphabet $\mathcal{S}_{\mathrm{P}}$. The aggregate vector $\mathbf{x} = (x_i \mid i \in [1:M+N])^{\mathrm{T}}$ is OFDM modulated by inputting it to an IFFT and inserting a cyclic prefix (CP). The modulated signal is sent through a channel whose maximum excess delay is assumed to be smaller than the CP duration. At the receiver, the signal after CP removal and FFT reads

$$\mathbf{y} = \mathbf{h} \odot \mathbf{x} + \mathbf{w}. \tag{1}$$

In (1), $\odot$ denotes the componentwise product, $\mathbf{y} = (y_i \mid i \in [1:M+N])^{\mathrm{T}}$ is the vector of received signal samples, $\mathbf{h} = (h_i \mid i \in [1:M+N])^{\mathrm{T}}$ contains the samples of the channel transfer function and $\mathbf{w} = (w_i \mid i \in [1:M+N])^{\mathrm{T}}$ is the vector of additive noise samples. We assume $\mathbf{h}$ to be zero-mean Gaussian distributed, i.e., $p(\mathbf{h}) = \mathrm{CN}(\mathbf{h}; \mathbf{0}, \boldsymbol{\Sigma}_{\mathbf{h}}^{\mathrm{p}})$ with $\boldsymbol{\Sigma}_{\mathbf{h}}^{\mathrm{p}}$ being the Hermitian Toeplitz covariance matrix, while $p(\mathbf{w}) = \mathrm{CN}(\mathbf{w}; \mathbf{0}, \gamma^{-1}\mathbf{I}_{M+N})$, where γ is the noise precision.[3]

At the receiver, the bit-by-bit MAP decision criterion is sought to minimize the bit error rate (BER). It requires computating the marginal posterior pdfs $p(u_k|\mathbf{y})$, $k \in [1:K]$, from the joint pdf $p(\mathbf{y}, \mathbf{h}, \gamma, \mathbf{x}_{\mathrm{D}}, \mathbf{c}, \mathbf{u})$, which is intractable for our assumed system. Thus, we have to resort to computing approximate marginals $b_{u_k}(u_k) \approx p(u_k|\mathbf{y})$, called beliefs.

This work was supported by the project SIDOC (contract no. POSDRU/88/1.5/S/60078), the 4GMCT cooperative research project funded by Intel Mobile Communications, Agilent Technologies, Aalborg University and the Danish National Advanced Technology Foundation, and by the EC FP7 Network of Excellence NEWCOM# (Grant agreement no. 318306).

The authors are with the Dept. of Electronic Systems, Aalborg University, Denmark (e-mail: {in_mba, cnm, bfl}@es.aau.dk). M.-A. Badiu was also with the Communications Dept., Technical University of Cluj-Napoca, Romania.

[1] By setting the state-space dimension to one we obtain the *scalar* AR(1) model, which was previously used in [3]–[5] to model the temporal channel variation. In [2], the frequency selective channel is assumed to be block fading with fading coefficients obeying a scalar AR(p) model.

[2] Throughout the paper, $[1:n]$ denotes the set $\{i \in \mathbb{N} \mid 1 \leq i \leq n\}$.

[3] We denote by $\mathrm{CN}(\cdot; \boldsymbol{\mu}, \boldsymbol{\Sigma})$ the pdf of a complex Gaussian distribution with mean $\boldsymbol{\mu}$ and covariance matrix $\boldsymbol{\Sigma}$; similarly, the pdf of a Gamma distribution with scale a and rate b is denoted by $\mathrm{Ga}(\cdot; a, b)$.

III. Message-Passing Receiver Design

We formulate the receiver's task as inference in an approximate probabilistic model and we use the combined BP-MF inference framework [8] to compute the beliefs $b_{u_k}(u_k)$.

A. Probabilistic model and factor graph

Even though in the system model we assumed $p(\mathbf{h}) = \mathrm{CN}(\mathbf{h}; \mathbf{0}, \mathbf{\Sigma}_{\mathbf{h}}^{\mathrm{p}})$, when designing the receiver we deliberately introduce a mismatched probabilistic model of the channel weights $\tilde{p}(\mathbf{h}) \approx p(\mathbf{h})$. As we will see, this is the key idea to tune and reduce the complexity of channel estimation, as compared to receiver schemes that estimate the channel by inverting an $(M+N)\times(M+N)$ matrix. Specifically, we make the approximation that the channel weights obey a Markov model:

$$\tilde{p}(\mathbf{h}) = p(\mathbf{h}_1) \prod_{q=2}^{Q} p(\mathbf{h}_q|\mathbf{h}_{q-1}). \tag{2}$$

In (2), state vectors $\mathbf{h}_q \triangleq (h_i \mid i \in [(q-1)G+1 : qG])^{\mathrm{T}}$, $q \in [1:Q]$, represent non-overlapping groups of G contiguous channel weights.[4] We denote by $\mathcal{D}_q$ and $\mathcal{P}_q$ the sets of data and pilot indices corresponding to the qth vector, i.e., $\mathcal{D}_q \triangleq \mathcal{D} \cap [(q-1)G+1 : qG]$ and $\mathcal{P}_q \triangleq \mathcal{P} \cap [(q-1)G+1 : qG]$. Intuitively, with this model one can better retain and exploit the correlation of the channel weights by selecting larger values of G and vice versa. In the right-hand side of (2) we plug the expressions of the marginal pdf $p(\mathbf{h}_1)$ and conditional pdfs $p(\mathbf{h}_q|\mathbf{h}_{q-1})$, $q \in [2:Q]$, derived from the "exact" joint Gaussian pdf $p(\mathbf{h})$. Since $\mathbf{h}$ has zero mean and $\mathbf{\Sigma}_{\mathbf{h}}^{\mathrm{p}}$ is Toeplitz, we have

$$p(\mathbf{h}_q|\mathbf{h}_{q-1}) = \mathrm{CN}(\mathbf{h}_q; \mathbf{A}\mathbf{h}_{q-1}, \mathbf{V}) \tag{3}$$

for all $q \in [2:Q]$, with $\mathbf{A}$ and $\mathbf{V}$ determined by $\mathbf{\Sigma}_{\mathbf{h}}^{\mathrm{p}}$:[5]

$$\mathbf{A} = \mathbf{V}_{21}\mathbf{V}_{11}^{-1}, \qquad \mathbf{V} = \mathbf{V}_{22} - \mathbf{V}_{21}\mathbf{V}_{11}^{-1}\mathbf{V}_{12}$$

where $\mathbf{V}_{ij}$, $i,j \in \{1,2\}$, are $G \times G$ submatrices of $\mathbf{\Sigma}_{\mathbf{h}}^{\mathrm{p}}$, i.e.,

$$\left[\mathbf{\Sigma}_{\mathbf{h}}^{\mathrm{p}}\right]_{1:2G,1:2G} = \left[\begin{array}{c|c} \mathbf{V}_{11} & \mathbf{V}_{12} \\ \hline \mathbf{V}_{21} & \mathbf{V}_{22} \end{array}\right].$$

Using Bayes' rule and the system assumptions, the approximate joint pdf of all system random variables factorizes as

$$\begin{aligned} p(\mathbf{y}, \mathbf{h}, \gamma, \mathbf{x}_{\mathrm{D}}, \mathbf{c}, \mathbf{u}) &= \prod_{i\in\mathcal{D}} f_{\mathrm{D}_i}(h_i, \gamma, x_i) \prod_{j\in\mathcal{P}} f_{\mathrm{P}_j}(h_j, \gamma) \\ &\times f_{\mathrm{T}_1}(\mathbf{h}_1) \prod_{q=2}^{Q} f_{\mathrm{T}_q}(\mathbf{h}_q, \mathbf{h}_{q-1})\, f_{\mathrm{N}}(\gamma) \\ &\times \prod_{n\in[1:N]} f_{\mathrm{M}_n}(x_{i_n}, \mathbf{c}_n)\, f_{\mathrm{C}}(\mathbf{c}, \mathbf{u}) \prod_{k\in[1:K]} f_{\mathrm{U}_k}(u_k). \end{aligned} \tag{4}$$

The factors in (4) are defined in the following:

$$f_{\mathrm{D}_i}(h_i, \gamma, x_i) \triangleq p(y_i|h_i, \gamma, x_i) = \mathrm{CN}(y_i; h_i x_i, \gamma^{-1}), \quad i \in \mathcal{D},$$
$$f_{\mathrm{P}_j}(h_j, \gamma) \triangleq p(y_j|h_j, \gamma) = \mathrm{CN}(y_j; h_j x_j, \gamma^{-1}), \quad j \in \mathcal{P}$$

are given by the observation model (1); $f_{\mathrm{T}_1}(\mathbf{h}_1) \triangleq p(\mathbf{h}_1) = \mathrm{CN}(\mathbf{h}_1; \mathbf{0}, \mathbf{V}_{11})$ is the prior pdf of $\mathbf{h}_1$, $f_{\mathrm{T}_q}(\mathbf{h}_q, \mathbf{h}_{q-1}) \triangleq p(\mathbf{h}_q|\mathbf{h}_{q-1})$, $q \in [2:Q]$, denote the "transition" pdfs in (3); $f_{\mathrm{N}}(\gamma) \triangleq p(\gamma)$ is the prior pdf of the noise precision; $f_{\mathrm{M}_n}(x_{i_n}, \mathbf{c}_n) \triangleq p(x_{i_n}|\mathbf{c}_n)$, $n \in [1:N]$, $i_n \in \mathcal{D}$, represent the modulation constraints; $f_{\mathrm{C}}(\mathbf{c}, \mathbf{u}) \triangleq p(\mathbf{c}|\mathbf{u})$ stands for the coding and interleaving constraints; $f_{\mathrm{U}_k}(u_k) \triangleq p(u_k)$, $k \in [1:K]$, are the prior pdfs of the information bits. The factor graph representation [6] of (4) is illustrated in Fig. 1. Note that when $G = M+N$ ($Q=1$) we have $\tilde{p}(\mathbf{h}) = p(\mathbf{h})$, such that the approximate channel model (2) and joint pdf (4) reduce to the exact ones used in [7], [8].

[4]We assumed $M+N = QG$, which can be achieved by appropriately choosing the corresponding values.

[5]The matrices $\mathbf{A}$ and $\mathbf{V}$ can also be computed by using the Yule-Walker equations.

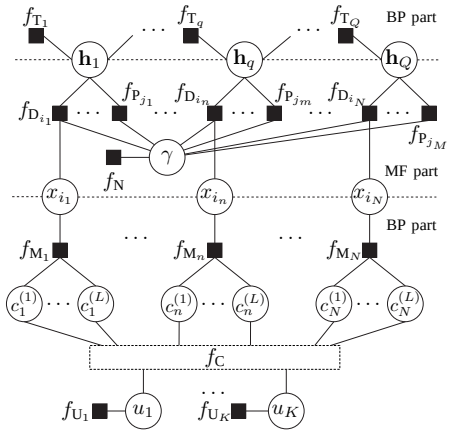

Fig. 1. Factor graph representation of the pdf factorization (4). In this figure, we assumed $i_1 \in \mathcal{D}_1$, $i_n \in \mathcal{D}_q$, $i_N \in \mathcal{D}_Q$, $j_1 \in \mathcal{P}_1$, $j_m \in \mathcal{P}_q$, $j_M \in \mathcal{P}_Q$. In general, for a relatively small state-space dimension G and/or low number of pilots M, there could be many values of $q \in [1:Q]$ for which $\mathcal{P}_q = \emptyset$.

B. Message-passing algorithm

We apply the combined BP-MF inference framework [8] to the factor graph in Fig. 1. According to [8], we first define the MF and BP parts of the factor graph by splitting the set $\mathcal{A}$ of all factor nodes into two disjoint sets $\mathcal{A}_{\mathrm{MF}}$ and $\mathcal{A}_{\mathrm{BP}}$, such that $\mathcal{A}_{\mathrm{MF}} \cup \mathcal{A}_{\mathrm{BP}} = \mathcal{A}$ and $\mathcal{A}_{\mathrm{MF}} \cap \mathcal{A}_{\mathrm{BP}} = \emptyset$. The BP (MF) part contains the factor nodes in $\mathcal{A}_{\mathrm{BP}}$ ($\mathcal{A}_{\mathrm{MF}}$) together with the variable nodes connected to them. We refer the reader to [8] for the message passing fixed-point equations that are to be solved in order to retrieve the beliefs of the variables. Note that the message computation rules clearly state that variable nodes lying in both BP and MF parts send extrinsic values to factor nodes in the BP part and *a posteriori* probability (APP) values to factor nodes in the MF part. For our factor graph, we choose $\mathcal{A}_{\mathrm{MF}} \triangleq \{f_{\mathrm{D}_i} \mid i \in \mathcal{D}\} \cup \{f_{\mathrm{P}_j} \mid j \in \mathcal{P}\} \cup \{f_{\mathrm{N}}\}$ and $\mathcal{A}_{\mathrm{BP}} \triangleq \{f_{\mathrm{T}_q} \mid q \in [1:Q]\} \cup \{f_{\mathrm{M}_n} \mid n \in [1:N]\} \cup \{f_{\mathrm{C}}\} \cup \{f_{\mathrm{U}_k} \mid k \in [1:K]\}$.

We now define some quantities that will often occur in the message computations: for $i \in \mathcal{D}$, $\hat{x}_i \triangleq \int x_i\, b_{x_i}(x_i)\, \mathrm{d}x_i$ and $\sigma_{x_i}^2 \triangleq \int |x_i - \hat{x}_i|^2 b_{x_i}(x_i)\, \mathrm{d}x_i$ represent the mean and variance, respectively, of belief $b_{x_i}(x_i)$ of data symbol x_i; the estimate of the noise precision with pdf $b_\gamma(\gamma)$ is the mean $\hat{\gamma} \triangleq \int \gamma\, b_\gamma(\gamma)\, \mathrm{d}\gamma$; similarly, for $q \in [1:Q]$, the mean and covariance of belief $b_{\mathbf{h}_q}(\mathbf{h}_q)$ of the channel weight vector $\mathbf{h}_q$ are $\hat{\mathbf{h}}_q \triangleq \int \mathbf{h}_q\, b_{\mathbf{h}_q}(\mathbf{h}_q)\, \mathrm{d}\mathbf{h}_q$ and $\mathbf{\Sigma}_{\mathbf{h}_q} \triangleq \int (\mathbf{h}_q - \hat{\mathbf{h}}_q)(\mathbf{h}_q - \hat{\mathbf{h}}_q)^{\mathrm{H}} b_{\mathbf{h}_q}(\mathbf{h}_q)\, \mathrm{d}\mathbf{h}_q$, respectively.

Since $f_{\mathrm{D}_i} \in \mathcal{A}_{\mathrm{MF}}$, we have $n_{x_i \to f_{\mathrm{D}_i}}(x_i) = b_{x_i}(x_i)$, $i \in \mathcal{D}$, i.e., these messages are the APP values of the data symbols. Similarly, having f_{D_i}, $f_{\mathrm{P}_j} \in \mathcal{A}_{\mathrm{MF}}$ leads to $n_{\gamma \to f_{\mathrm{D}_i}}(\gamma) = n_{\gamma \to f_{\mathrm{P}_j}}(\gamma) = b_\gamma(\gamma)$, for all $i \in \mathcal{D}$, $j \in \mathcal{P}$.

1) Channel estimation: For all $q \in [1:Q]$, we have

$$\begin{aligned} & m^{\text{MF}}_{f_{\text{D}_i}\to\mathbf{h}_q}(h_i) \\ & = \exp\left(\int n_{x_i\to f_{\text{D}_i}}(x_i)\, n_{\gamma\to f_{\text{D}_i}}(\gamma) \ln f_{\text{D}_i}(h_i,\gamma,x_i)\,\mathrm{d}x_i\,\mathrm{d}\gamma\right) \\ & \propto \text{CN}\left(h_i;\hat{h}_{i,\text{o}},\sigma^2_{h_i,\text{o}}\right), \quad i\in\mathcal{D}_q, \end{aligned} \tag{5}$$

$$\begin{aligned} & m^{\text{MF}}_{f_{\text{P}_i}\to\mathbf{h}_q}(h_i) = \exp\left(\int n_{\gamma\to f_{\text{P}_i}}(\gamma) \ln f_{\text{P}_i}(h_i,\gamma)\,\mathrm{d}\gamma\right) \\ & \propto \text{CN}\left(h_i;\hat{h}_{i,\text{o}},\sigma^2_{h_i,\text{o}}\right), \quad i\in\mathcal{P}_q \end{aligned} \tag{6}$$

with $\propto$ denoting proportionality and

$$\hat{h}_{i,\text{o}} = \begin{cases} \frac{\hat{x}_i^* y_i}{|\hat{x}_i|^2+\sigma^2_{x_i}}, & i\in\mathcal{D}_q \\ \frac{y_i}{x_i}, & i\in\mathcal{P}_q \end{cases}, \quad \sigma^2_{h_i,\text{o}} = \begin{cases} \frac{\hat{\gamma}^{-1}}{|\hat{x}_i|^2+\sigma^2_{x_i}}, & i\in\mathcal{D}_q \\ \frac{\hat{\gamma}^{-1}}{|x_i|^2}, & i\in\mathcal{P}_q \end{cases}.$$

We define the vector $\hat{\mathbf{h}}^{\text{obs}}_q \triangleq (\hat{h}_{i,\text{o}} \mid i\in\mathcal{D}_q\cup\mathcal{P}_q)^{\text{T}}$ and the diagonal matrix $\mathbf{\Sigma}^{\text{obs}}_{\mathbf{h}_q}$ with diagonal elements $\sigma^2_{h_i,\text{o}}$, $i\in\mathcal{D}_q\cup\mathcal{P}_q$. Because $f_{\text{T}_q}\in\mathcal{A}_{\text{BP}}$, we have

$$\begin{aligned} & n_{\mathbf{h}_q\to f_{\text{T}_{q+1}}}(\mathbf{h}_q) \\ & = m^{\text{BP}}_{f_{\text{T}_q}\to\mathbf{h}_q}(\mathbf{h}_q) \prod\nolimits_{i\in\mathcal{D}_q} m^{\text{MF}}_{f_{\text{D}_i}\to\mathbf{h}_q}(h_i) \prod\nolimits_{j\in\mathcal{P}_q} m^{\text{MF}}_{f_{\text{P}_j}\to\mathbf{h}_q}(h_j) \end{aligned}$$

for all $q\in[1:Q-1]$, while

$$m^{\text{BP}}_{f_{\text{T}_q}\to\mathbf{h}_q}(\mathbf{h}_q) \propto \int n_{\mathbf{h}_{q-1}\to f_{\text{T}_q}}(\mathbf{h}_{q-1}) f_{\text{T}_q}(\mathbf{h}_q,\mathbf{h}_{q-1})\,\mathrm{d}\mathbf{h}_{q-1}$$

for all $q\in[2:Q]$. Note that $m^{\text{BP}}_{f_{\text{T}_1}\to\mathbf{h}_1}(\mathbf{h}_1)\propto f_{\text{T}_1}(\mathbf{h}_1) = \text{CN}(\mathbf{h}_1;\mathbf{0},\mathbf{V}_{11})$. Since the messages (5) and (6) are proportional to Gaussian pdfs, it follows that $n_{\mathbf{h}_1\to f_{\text{T}_2}}$ and, consequently, $m^{\text{BP}}_{f_{\text{T}_2}\to\mathbf{h}_2}$ are proportional to Gaussian pdfs. By mathematical induction, the forward messages in the subgraph representing (2) are proportional to Gaussian pdfs, i.e.,

$$\begin{aligned} n_{\mathbf{h}_q\to f_{\text{T}_{q+1}}}(\mathbf{h}_q) &= \text{CN}\left(\mathbf{h}_q;\hat{\mathbf{h}}^{\text{fwd}}_q,\mathbf{\Sigma}^{\text{fwd}}_{\mathbf{h}_q}\right), \\ m^{\text{BP}}_{f_{\text{T}_q}\to\mathbf{h}_q}(\mathbf{h}_q) &\propto \text{CN}\left(\mathbf{h}_q;\hat{\mathbf{h}}^{q|q-1}_q,\mathbf{\Sigma}^{q|q-1}_{\mathbf{h}_q}\right) \end{aligned} \tag{7}$$

with parameters given in (9) and (10). Analogously, the backward messages are also proportional to Gaussian pdfs:

$$\begin{aligned} n_{\mathbf{h}_q\to f_{\text{T}_q}}(\mathbf{h}_q) &= \text{CN}\left(\mathbf{h}_q;\hat{\mathbf{h}}^{\text{bck}}_q,\mathbf{\Sigma}^{\text{bck}}_{\mathbf{h}_q}\right), \\ m^{\text{BP}}_{f_{\text{T}_{q+1}}\to\mathbf{h}_q}(\mathbf{h}_q) &\propto \text{CN}\left(\mathbf{h}_q;\hat{\mathbf{h}}^{q|q+1}_q,\mathbf{\Sigma}^{q|q+1}_{\mathbf{h}_q}\right) \end{aligned} \tag{8}$$

with parameters given in (11) and (12). Hence, the beliefs of the channel weight vectors $\mathbf{h}_q$, $q\in[1:Q]$, are Gaussian pdfs:

$$b_{\mathbf{h}_q}(\mathbf{h}_q) = m^{\text{BP}}_{f_{\text{T}_q}\to\mathbf{h}_q}(\mathbf{h}_q)\, n_{\mathbf{h}_q\to f_{\text{T}_q}}(\mathbf{h}_q) = \text{CN}\left(\mathbf{h}_q;\hat{\mathbf{h}}_q,\mathbf{\Sigma}_{\mathbf{h}_q}\right)$$

with parameters given in (13). The belief of a component h_i of $\mathbf{h}_q$ is the corresponding marginal distribution of $b_{\mathbf{h}_q}(\mathbf{h}_q)$, $i\in[(q-1)G+1:qG]$; therefore, the mean $\hat{h}_i$ and variance $\sigma^2_{h_i}$ are the i'th component of $\hat{\mathbf{h}}_q$ and the (i',i')th element of $\mathbf{\Sigma}_{\mathbf{h}_q}$, respectively, with $i'=i \mod G$. Because f_{D_i}, $f_{\text{P}_j}\in\mathcal{A}_{\text{MF}}$, we have $n_{\mathbf{h}_q\to f_{\text{D}_i}}(\mathbf{h}_q) = n_{\mathbf{h}_q\to f_{\text{P}_j}}(\mathbf{h}_q) = b_{\mathbf{h}_q}(\mathbf{h}_q)$, for all $q\in[1:Q]$, $i\in\mathcal{D}_q$, $j\in\mathcal{P}_q$.

TABLE I
PARAMETERS OF THE CHANNEL WEIGHT MESSAGES

$(\mathbf{\Sigma}^{\text{fwd}}_{\mathbf{h}_q})^{-1} = (\mathbf{\Sigma}^{\text{obs}}_{\mathbf{h}_q})^{-1} + (\mathbf{\Sigma}^{q\|q-1}_{\mathbf{h}_q})^{-1}$ $\hat{\mathbf{h}}^{\text{fwd}}_q = \mathbf{\Sigma}^{\text{fwd}}_{\mathbf{h}_q}\left[(\mathbf{\Sigma}^{\text{obs}}_{\mathbf{h}_q})^{-1}\hat{\mathbf{h}}^{\text{obs}}_q + (\mathbf{\Sigma}^{q\|q-1}_{\mathbf{h}_q})^{-1}\hat{\mathbf{h}}^{q\|q-1}_q\right]$	(9)
$\mathbf{h}^{1\|0}_1 = \mathbf{0}, \quad \mathbf{\Sigma}^{1\|0}_{\mathbf{h}_1} = \mathbf{V}_{11}$ $\hat{\mathbf{h}}^{q\|q-1}_q = \mathbf{A}\hat{\mathbf{h}}^{\text{fwd}}_{q-1}, \quad \mathbf{\Sigma}^{q\|q-1}_{\mathbf{h}_q} = \mathbf{A}\mathbf{\Sigma}^{\text{fwd}}_{\mathbf{h}_{q-1}}\mathbf{A}^{\text{H}} + \mathbf{V}$	(10)
$\hat{\mathbf{h}}^{\text{bck}}_Q = \hat{\mathbf{h}}^{\text{obs}}_Q, \quad \mathbf{\Sigma}^{\text{bck}}_{\mathbf{h}_Q} = \mathbf{\Sigma}^{\text{obs}}_{\mathbf{h}_Q}, \quad (\mathbf{\Sigma}^{\text{bck}}_{\mathbf{h}_q})^{-1} = (\mathbf{\Sigma}^{\text{obs}}_{\mathbf{h}_q})^{-1} + (\mathbf{\Sigma}^{q\|q+1}_{\mathbf{h}_q})^{-1}$ $\hat{\mathbf{h}}^{\text{bck}}_q = \mathbf{\Sigma}^{\text{bck}}_{\mathbf{h}_q}\left[(\mathbf{\Sigma}^{\text{obs}}_{\mathbf{h}_q})^{-1}\hat{\mathbf{h}}^{\text{obs}}_q + (\mathbf{\Sigma}^{q\|q+1}_{\mathbf{h}_q})^{-1}\hat{\mathbf{h}}^{q\|q+1}_q\right]$	(11)
$\hat{\mathbf{h}}^{q\|q+1}_q = \mathbf{A}^{-1}\hat{\mathbf{h}}^{\text{bck}}_{q+1}, \quad \hat{\mathbf{h}}^{Q\|Q+1}_Q \triangleq \mathbf{0}$ $\mathbf{\Sigma}^{q\|q+1}_{\mathbf{h}_q} = \mathbf{A}^{-1}(\mathbf{\Sigma}^{\text{bck}}_{\mathbf{h}_{q+1}} + \mathbf{V})(\mathbf{A}^{-1})^{\text{H}}, \quad (\mathbf{\Sigma}^{Q\|Q+1}_{\mathbf{h}_Q})^{-1} \triangleq \mathbf{0}$	(12)
$(\mathbf{\Sigma}_{\mathbf{h}_q})^{-1} = (\mathbf{\Sigma}^{q\|q-1}_{\mathbf{h}_q})^{-1} + (\mathbf{\Sigma}^{\text{bck}}_{\mathbf{h}_q})^{-1}$ $\hat{\mathbf{h}}_q = \mathbf{\Sigma}_{\mathbf{h}_q}\left[(\mathbf{\Sigma}^{q\|q-1}_{\mathbf{h}_q})^{-1}\hat{\mathbf{h}}^{q\|q-1}_q + (\mathbf{\Sigma}^{\text{bck}}_{\mathbf{h}_q})^{-1}\hat{\mathbf{h}}^{\text{bck}}_q\right]$	(13)

2) Noise precision estimation: We compute the messages

$$\begin{aligned} & m^{\text{MF}}_{f_{\text{D}_i}\to\gamma}(\gamma) \\ & = \exp\left(\int n_{x_i\to f_{\text{D}_i}}(x_i)\, n_{\mathbf{h}_q\to f_{\text{D}_i}}(\mathbf{h}_q) \ln f_{\text{D}_i}(h_i,\gamma,x_i)\,\mathrm{d}x_i\,\mathrm{d}\mathbf{h}_q\right) \\ & \propto \text{Ga}\left(\gamma;2,|y_i-\hat{h}_i\hat{x}_i|^2+\sigma^2_{h_i}\hat{x}_i+(\hat{h}_i+\sigma^2_{h_i})\sigma^2_{x_i}\right), \\ & m^{\text{MF}}_{f_{\text{P}_j}\to\gamma}(\gamma) = \exp\left(\int n_{\mathbf{h}_q\to f_{\text{P}_j}}(\mathbf{h}_q) \ln f_{\text{P}_j}(h_j,\gamma)\,\mathrm{d}\mathbf{h}_q\right) \\ & \propto \text{Ga}\left(\gamma;2,|y_j-\hat{h}_jx_j|^2+\sigma^2_{h_j}x_j\right) \end{aligned}$$

for all $i\in\mathcal{D}_q$, $j\in\mathcal{P}_q$, $q\in[1:Q]$. We have $m^{\text{MF}}_{f_{\text{N}}\to\gamma}(\gamma) = f_{\text{N}}(\gamma)$. By setting a non-informative conjugate prior pdf $f_{\text{N}}(\gamma) = \text{Ga}(\gamma;0,0)$, we obtain the belief

$$\begin{aligned} b_\gamma(\gamma) &\propto m^{\text{MF}}_{f_{\text{N}}\to\gamma}(\gamma) \prod\nolimits_{i\in\mathcal{D}} m^{\text{MF}}_{f_{\text{D}_i}\to\gamma}(\gamma) \prod\nolimits_{j\in\mathcal{P}} m^{\text{MF}}_{f_{\text{P}_j}\to\gamma}(\gamma) \\ &= \text{Ga}(\gamma;M+N,\beta) \end{aligned} \tag{14}$$

with rate $\beta = \sum_{i\in\mathcal{D}}\left[|y_i-\hat{h}_i\hat{x}_i|^2+\sigma^2_{h_i}\hat{x}_i+(\hat{h}_i+\sigma^2_{h_i})\sigma^2_{x_i}\right] + \sum_{j\in\mathcal{P}}\left(|y_j-\hat{h}_jx_j|^2+\sigma^2_{h_j}x_j\right)$. From (14), the estimate of the noise precision is $\hat{\gamma} = (M+N)/\beta$. Since f_{D_i}, $f_{\text{P}_j}\in\mathcal{A}_{\text{MF}}$, we have $n_{\gamma\to f_{\text{D}_i}}(\gamma) = n_{\gamma\to f_{\text{P}_j}}(\gamma) = b_\gamma(\gamma)$, for all $i\in\mathcal{D}$, $j\in\mathcal{P}$.

3) Equalization and decoding: The messages

$$\begin{aligned} & m^{\text{MF}}_{f_{\text{D}_i}\to x_i}(x_i) \\ & = \exp\left(\int n_{\mathbf{h}_q\to f_{\text{D}_i}}(\mathbf{h}_q)\, n_{\gamma\to f_{\text{D}_i}}(\gamma) \ln f_{\text{D}_i}(h_i,\gamma,x_i)\,\mathrm{d}\mathbf{h}_q\,\mathrm{d}\gamma\right) \\ & \propto \text{CN}\left(x_i;\frac{\hat{h}_i^* y_i}{|\hat{h}_i|^2+\sigma^2_{h_i}},\frac{\hat{\gamma}^{-1}}{|\hat{h}_i|^2+\sigma^2_{h_i}}\right) \end{aligned}$$

for all $q\in[1:Q]$, $i\in\mathcal{D}_q$, represent the extrinsic values that are input to the BP part. In this subgraph, the computation of BP messages corresponds to MAP demapping, deinterleaving, decoding, interleaving and, finally, soft mapping. The beliefs $b_{x_{i_n}}(x_{i_n}) = m^{\text{BP}}_{f_{\text{M}_n}\to x_{i_n}}(x_{i_n})\, m^{\text{MF}}_{f_{\text{D}_{i_n}}\to x_{i_n}}(x_{i_n})$ are input to the MF part via $n_{x_{i_n}\to f_{\text{D}_{i_n}}}(x_{i_n})$, $n\in[1:N]$, $i_n\in\mathcal{D}$.

4) Message-passing scheduling: Initialize $\hat{\gamma} = (M+N)/\mathbf{y}^{\text{H}}\mathbf{y}$ and, for all $q\in[1:Q]$, set $m^{\text{MF}}_{f_{\text{D}_i}\to\mathbf{h}_q}(h_i)\propto$

$\mathrm{CN}(h_i; 0, \infty)$, $i \in \mathcal{D}_q$, and compute $m^{\mathrm{MF}}_{f_{\mathrm{P}_j} \to \mathbf{h}_q}(h_i)$, $i \in \mathcal{P}_q$, with (6). Then, perform a forward-backward propagation in the Markov chain by successively computing the messages (7) and (8). The beliefs $b_{\mathbf{h}_q}(\mathbf{h}_q)$ are sent to the MF part via $n_{\mathbf{h}_q \to f_{\mathrm{D}_i}}(\mathbf{h}_q)$ and $n_{\mathbf{h}_q \to f_{\mathrm{P}_j}}(\mathbf{h}_q)$, $q \in [1 : Q]$. After computing $m^{\mathrm{MF}}_{f_{\mathrm{D}_i} \to x_i}(x_i)$, the first iteration is completed by performing MAP demapping and decoding. Each subsequent iteration consists in computing the messages corresponding to soft mapping, noise precision estimation, channel estimation, equalization, demapping and decoding.

Finally, the receiver computes hard decisions $\hat{u}_k \in \{0, 1\}$, $k \in [1 : K]$, by choosing the value which maximizes the corresponding belief $b_{u_k}(u_k) = m^{\mathrm{BP}}_{f_{\mathrm{C}} \to u_k}(u_k)\, f_{\mathrm{U}_k}(u_k)$.

5) Complexity of channel estimation (per iteration): With the proposed splitting of the factor graph into the BP and MF parts, i.e., $f_{\mathrm{T}_q} \in \mathcal{A}_{\mathrm{BP}}$, $q \in [1 : Q]$, the computation of the message parameters (9)–(13) are equivalent to the Kalman smoother [6]. Therefore, the channel estimation complexity with the approximate model (2) is $\mathcal{O}(G^3 Q) = \mathcal{O}(G^2(M + N))$, while the complexity with the exact model ($G = M+N$, $Q = 1$) is $\mathcal{O}((M + N)^3)$. For $G \ll M + N$, the complexity is linear in the number of transmitted symbols.

IV. Simulation Results

The BER performance of the proposed receiver algorithm is evaluated via Monte Carlo simulations of an OFDM system with parameters given in Table II. We refer to the receiver as $\mathrm{Rec}(G)$ to stress that it depends on the design parameter G. We assume a static zero-mean complex Gaussian WSSUS channel with P multipath components equispaced in delay. Thus, its impulse response reads $g(\tau) = \sum_{m=1}^{P} \alpha_m\, \delta(\tau - \tau_m)$ where $\tau_m = m\,\Delta\tau$, $m \in [0 : P - 1]$, and $\Delta\tau = 120\,\mathrm{ns}$.[6,7] Additionally, we assume that the channel power-delay profile (PDP) is exponentially-decaying, i.e., $\mathbb{E}[|\alpha_m^2|] = C \exp(-\lambda\, \tau_m)$, where λ is the decay rate and the positive constant C ensures that $g(\tau)$ has unit average power. The parameters of the PDPs used in the simulations are indicated in Table II.

We also evaluate the performance of two reference receivers: one that knows $\mathbf{h}$ and γ (Ref. 1) and one that knows γ and performs pilot-based LMMSE channel estimation (Ref. 2). Fig. 2(a) shows that the performance of $\mathrm{Rec}(G = 3)$ is limited, meaning that the algorithm is unable to cope with the high mismatch introduced by selecting too low values of G. However, the performance of $\mathrm{Rec}(G = 6)$ is significantly improved over Ref. 2, and the gap to Ref. 1 and $\mathrm{Rec}(G = 300)$ is small. The dependency of the BER on G is illustrated in Fig. 2(b) for the two channels ($W^{(\mathrm{II})}_{\mathrm{coh}} \approx 2\, W^{(\mathrm{I})}_{\mathrm{coh}}$); basically all the benefit of increasing G is already exhausted when $G = 5$–6, in both cases. Note that the complexity of $\mathrm{Rec}(G = 6)$ is drastically reduced, compared to the receiver using the exact channel model ($\mathrm{Rec}(G = 300)$). The BER values converge in about 10 iterations of the algorithm for all $G \geq 4$.

[6]The covariance matrix of $\mathbf{h}$ in (1) has the entries $\left[\mathbf{\Sigma}^{\mathrm{p}}_{\mathbf{h}}\right]_{r,s} = \sum_{m=1}^{P} \mathbb{E}[|\alpha_m^2|]\, e^{-j2\pi(r-s)\Delta f\, \tau_m}$, with $r, s \in [1 : M + N]$.

[7]Note that the performance of the receiver depends mainly on the channel frequency correlation function, as its design relies on this function, and thereby on the channel coherence bandwidth. The fine structure of the channel response, such as the number of multipath components and their weights and relative delays, has relative little impact on the performance. This motivates the choice of a channel response with equidistant relative delays.

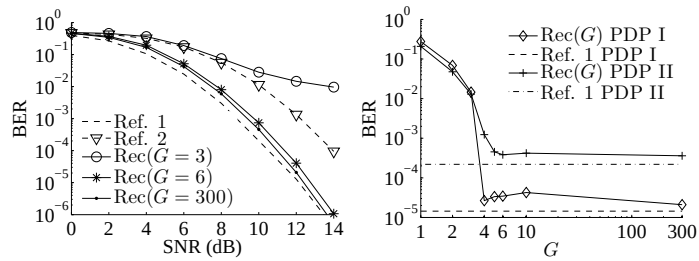

Fig. 2. BER performance of different receiver schemes (a) versus SNR for PDP I, and (b) versus G for PDP I and PDP II at SNR $= 12$ dB.

TABLE II
Parameters of the simulated wireless OFDM system

Subcarrier spacing	$\Delta f = 15\,\mathrm{kHz}$
Number of active subcarriers	$M + N = 300$
Number of regularly spaced pilots	$M = 15$
Pilot spacing	$\Delta f_{\mathrm{P}} = 300\,\mathrm{kHz}$
Modulation scheme for data symbols	$16\,\mathrm{QAM}\ (L = 4)$
Modulation scheme for pilot symbols	QPSK
Convolutional channel code	$R = 1/3$; $(133, 171, 165)_8$
PDP I:	$P = 20$; $\lambda = 10^6\ \mathrm{s}^{-1}$
PDP II:	$P = 10$; $\lambda = 2 \cdot 10^6\ \mathrm{s}^{-1}$
Coherence bandwidth of the channel	$2\, W^{(\mathrm{I})}_{\mathrm{coh}} \approx W^{(\mathrm{II})}_{\mathrm{coh}} \approx \Delta f_{\mathrm{P}}$

V. Conclusions

We proposed a message-passing OFDM receiver which provides a flexible way to adjust the complexity of channel estimation. Simulation results showed that, by setting a low state-space dimension of the mismatched Markov model of the channel weights, we obtain receivers that perform very closely to the receiver using the exact model while having much lower computational demands.

References

[1] M. Tüchler and A. C. Singer, "Turbo equalization: An overview," *IEEE Trans. Inf. Th.*, vol. 57, no. 2, pp. 920–952, 2011.

[2] X. Jin, A. Eckford, and T. Fuja, "LDPC codes for non-coherent block fading channels with correlation: analysis and design," *IEEE Trans. Comm.*, vol. 56, no. 1, pp. 70–80, Jan. 2008.

[3] Q. Guo, L. Ping, and D. Huang, "A low-complexity iterative channel estimation and detection technique for doubly selective channels," *IEEE Trans. Wir. Comm.*, vol. 8, no. 8, pp. 4340–4349, Aug. 2009.

[4] Y. Zhu, D. Guo, and M. Honig, "A message-passing approach for joint channel estimation, interference mitigation, and decoding," *IEEE Trans. Wireless Comm.*, vol. 8, no. 12, pp. 6008–6018, Dec. 2009.

[5] T. Wo, P. Hoeher, and Z. Shi, "Graph-based soft channel estimation for fast fading channels," *IEEE Trans. Wir. Comm.*, vol. 11, no. 12, pp. 4243–4251, Dec. 2012.

[6] F. Kschischang, B. Frey, and H.-A. Loeliger, "Factor graphs and the sum-product algorithm," *IEEE Trans. Inf. Th.*, vol. 47, no. 2, Feb. 2001.

[7] M.-A. Badiu, G. E. Kirkelund, C. Navarro Manchón, E. Riegler, and B. H. Fleury, "Message-passing algorithms for channel estimation and decoding using approximate inference," in *Proc. IEEE Int. Symp. Inf. Th. (ISIT 2012)*, Cambridge, MA, USA, July 2012, pp. 2386–2390.

[8] E. Riegler, G. E. Kirkelund, C. Navarro Manchón, M.-A. Badiu, and B. H. Fleury, "Merging belief propagation and the mean field approximation: A free energy approach," *IEEE Trans. Inf. Th.*, vol. 59, no. 1, pp. 588–602, Jan. 2013.

[9] J. Yedidia, W. Freeman, and Y. Weiss, "Constructing free-energy approximations and generalized belief propagation algorithms," *IEEE Trans. Inform. Theory*, vol. 51, no. 7, pp. 2282–2312, July 2005.