Aalborg Universitet

Investigating Pulsed Discharge Polarity Employing Solid-State Pulsed Power Electronics

Davari, Pooya; Zare, Firuz; Blaabjerg, Frede

Published in:
Electric Power Components & Systems

Publication date:
2015

Document Version
Early version, also known as pre-print

Link to publication from Aalborg University

Citation for published version (APA):
Davari, P., Zare, F., & Blaabjerg, F. (2015). Investigating Pulsed Discharge Polarity Employing Solid-State Pulsed Power Electronics. *Electric Power Components & Systems*, *43*(19), 2214-2222.

General rights
Copyright and moral rights for the publications made accessible in the public portal are retained by the authors and/or other copyright owners and it is a condition of accessing publications that users recognise and abide by the legal requirements associated with these rights.

- Users may download and print one copy of any publication from the public portal for the purpose of private study or research.
- You may not further distribute the material or use it for any profit-making activity or commercial gain
- You may freely distribute the URL identifying the publication in the public portal -

Take down policy
If you believe that this document breaches copyright please contact us at vbn@aub.aau.dk providing details, and we will remove access to the work immediately and investigate your claim.

Downloaded from vbn.aau.dk on: August 23, 2025

Investigating Pulsed Discharge Polarity Employing Solid-State Pulsed Power Electronics

Pooya Davari[1], Firuz Zare[2] and Frede Blaabjerg[1]

[1]Department of Energy Technology, Aalborg University, DK-9220 Aalborg, Denmark
[2]Danfoss Power Electronics A/S, Ulsnæs 1, DK-6300 Graasten, Denmark

Email: pda@et.aau.dk, fza@danfoss.com, fbl@et.aau.dk

Abstract

Power electronics technique has become a key technology in solid-state pulsed power supplies. Since pulsed power applications have been matured and found its way into many industrial applications, moving toward energy efficiency is gaining much more interest. Therefore, finding an optimum operation condition plays an important role in maintaining the desired performance. Investigating the system parameters contributed to the generated pulses is an effective way in improving the system performance further ahead. One of these parameters is discharge polarity which has received less attention. In this paper, effects of applied voltage polarity on plasma discharge have been investigated in different mediums at atmospheric pressure. The experiments have been conducted based on high voltage DC power supply and high voltage pulse generator for point-to-point and point-to-plane geometries. Furthermore, the influence of electric field distribution is analyzed using Finite Element simulations for the employed geometries and mediums. The experimental and simulation results have verified the important role of the applied voltage polarity, employed geometry and medium of the system on plasma generation.

Keywords: *pulsed power, positive discharge, negative discharge, plasma, flyback converter, push-pull converter.*

1. INTRODUCTION

Varied studies have been conducted on employing pulsed power technology in plasma generation for more than a decade. With the new advent in power electronics area, pulsed power systems have become more compact, reliable, adjustable and efficient [1-5]. This makes the pulsed power system suitable for different applications such as industrial [1, 5-7] and biomedical [5, 8]. Moving towards commercializing pulsed power systems has become a major goal and therefore the system efficiency turns out to be the main concern especially for industrial applications. Even with the use of new emerging power semiconductor technology the operating range of pulsed power systems are still limited. Hence, many researches have focused on exploring alternative topologies which can remedy such problem [1-4, 9]. Moreover, extracting the effective parameters on pulsed power system performance which can result in higher efficiency and consequently optimum operation has been studied recently [3, 6]. The influence of these well-known parameters such as voltage level, repetition rate, power level, and rise time has been investigated for different applications. However, one of the outmost effective parameters the voltage polarity has received less attention across the others.

Generally, plasma discharge depends on three factors of applied voltage, geometry and ambient. The applied voltage can be effective in terms of voltage level, rise time and repetition rate. Geometry includes the electrodes arrangement and shape. Depending on the applications requirement and specifications different electrodes arrangements such as point-to-plate and multi point-to-plate can be used. Usually two asymmetric electrodes involves in plasma generation. One highly curved (such as a small diameter wire) and one of low curvature (such as a plate). High potential gradient forms around the high curvature electrode. The ambient is also important feature which completely depends on the application and affects the voltage level (due to different dielectric strength) and electro-chemical process happens after plasma generation. The influence of these parameters can be studied through analyzing the electric field distribution between electrodes. Figure 1 illustrates simple block diagrams for pulsed power systems with different electrodes arrangements.

Plasma discharge can be positive or negative, determined by the polarity of the applied voltage across electrodes with a high potential gradient [10]. The characteristics of positive and negative plasma are totally unlike [11-17]. This difference causes varied phenomena, which can be advantageous in varied applications and more importantly optimizing the pulsed power system. In addition to the positive and negative plasma influences, investigating the effect of three aforementioned features on plasma polarity is also vital. Such information not only helps to sustain the required polarity, but also contributes to optimum operating condition. Table 1 gives a brief overview on applications for different types of plasma including the associated geometry, applied voltage and medium. As can be seen positive discharges have been applied in varied geometries and medium comparing with negative one. The reason, which is pointed out later in this paper, can be explained due to the higher electric field break-down for negative discharge conditions. However, this defect actually makes the negative discharges to be suitable

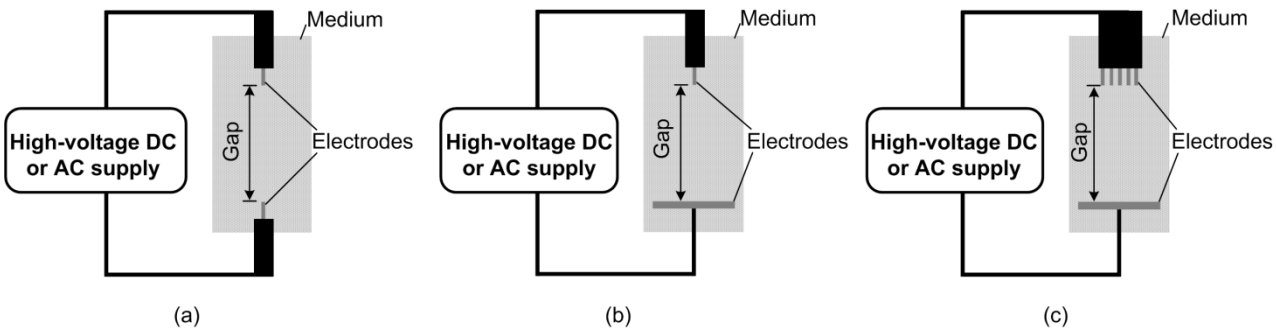

FIGURE 1. Block diagram of different pulsed power system arrangements: (a) point-to-point, (b) point-to-plane and (c) multipoint-to-plane.

Application	Geometry	Discharge Polarity	Applied Voltage	Medium
Sterilization [8]	Point-to-plane	Positive	HV-DC	Air-water
Air purification [18]	Point-to-plane	Negative	HV-DC	Air
Exhaust gas emission reduction [6]	Multipoint-to-plane	Positive	HV-AC	Exhaust gas and air mixture
Water treatment [17]	Point-to-point Point-to-plane	------ Positive	HV-DC	Water
Water ozonization [19]	Multipoint-to-plane	Positive	HV-AC	Air-water
Volatile organic compounds treatment [13]	Point-to-plane	Positive	HV-DC	Water

Table 1. Overview of different pulsed power applications with associated experimental conditions

for specific applications [15-18]. Moreover, the applied voltage waveform (DC or AC) totally depends on the employed pulsed power supply, required energy and application requirements. For example, high voltage AC pulse generators provide more flexibility in terms of controlling the repetition rate and output power, while high voltage DC supplies can provide strong shock-waves inside the liquid medium.

In this paper, the effect of the applied voltage polarity on the generated plasma is studied in different ambient and geometries. The important role of electric field distribution on discharge polarity is analyzed using Finite Element simulations of the system in different geometries and ambient. The difference in negative and positive plasma is first investigated in gas-liquid ambient by applying a high DC voltage. Further on, a high voltage AC waveform is applied, in order to verify the obtained results. The measured results illustrated the unlike behavior of the positive and negative plasmas.

2. EFFECTS OF ELECTRIC FIELD DISTRIBUTION

The polarity of plasma discharge depends on the electric filed distribution between the two electrodes. The applied voltage polarity on the electrode/s with higher electric field strength defines the polarity of the plasma discharge. However, the influence of employed geometry and ambient on electric field distribution should be taken into account, which varies from case to case.

To show the effect of geometry, Finite Element simulation for electric field distribution has been considered for two point-to-point (Figure 1(a)) and point-to-plane (Figure 1(b)) geometries. Figure 2 illustrated the electric field distribution resulting from the applied voltage in the air ambient. Figure 2(a) shows, the electric field distribution for two electrodes in point-to-point arrangement. As can be seen, the high electric field strength across each electrode is concentrated equally. On the other hand, point-to-plane situation (see Figure 2(b)) forms a significant different distribution which results in a high electric field strength across the point electrode. Therefore, the polarity of the applied voltage on the point electrode in the latter one is defined as a discharge polarity.

In addition to the employed geometry, the ambient also plays important role on electric field formation. To examine such effect the electric field distribution was simulated for both aforementioned geometries in gas-liquid (air-water) medium. In this case, the high electric field strength for both geometries appears across the point electrode (see Figure 3). This is due to the fact that the water conductivity makes almost the electric field distribution for both geometries similar. Therefore, the ambient can alter the electric field distribution regardless of the employed geometry. Here, the water conductivity was selected to

be as 200 µS/cm same as the used tap water in the experimentation phase.

3. EXPERIMENTAL SETUP AND METHODOLOGY

3.1. Discharge Chamber

A conventional discharge chamber to conduct plasma discharges with different geometries and ambient is designed as shown in Figure 4. The configuration of the discharge chamber directly affects the total system performance since it is directly related to the employed geometry and ambient. Figure 4 depicted the discharge chamber developed for this study with point-to-plane arrangement at a gas-liquid interface of air and 100ml tap water (200 µS/cm). The point electrode was a copper rod of 1.5 mm and the plane electrode was a flat-round copper plate of 65 mm in diameter. There was a discharge gap of ~ 2.5 mm between the point electrode and the liquid surface at gas-liquid ambient. Notably, the effect of the plate electrode connection considering the discharge chamber width was neglected in the simulation results presented in the previous section. Depending on the discharge chamber dimension the electrode connection may affect the electric field distribution.

3.2. Pulsed Power Topology

To investigate the pulsed power discharge polarity, two different types of DC and AC voltage waveforms have been

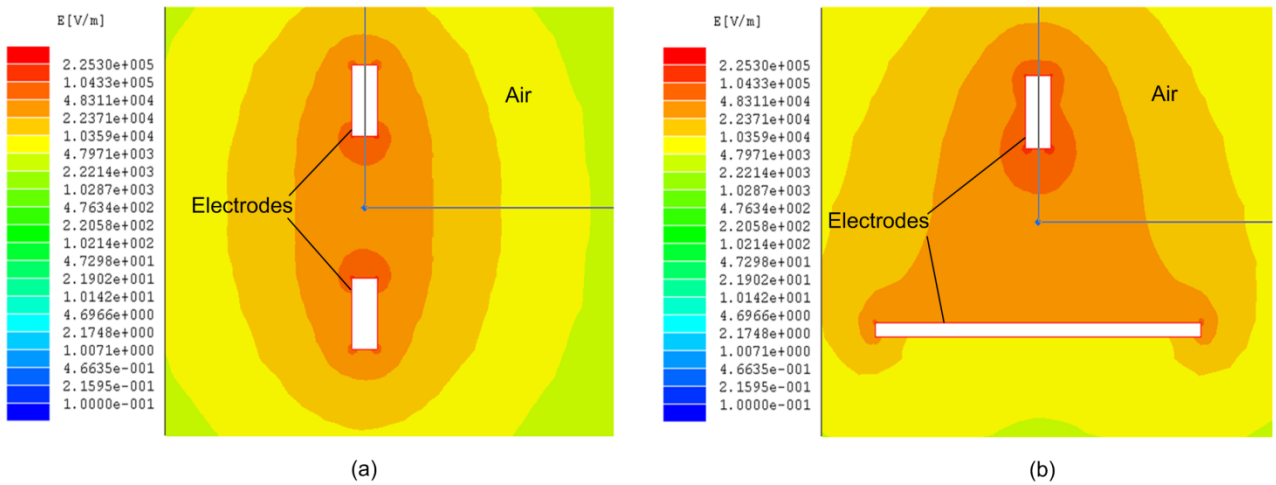

FIGURE 2. Finite Element simulation results for electric field distribution in air for: (a) point-to-point and (b) point-to-plane geometries

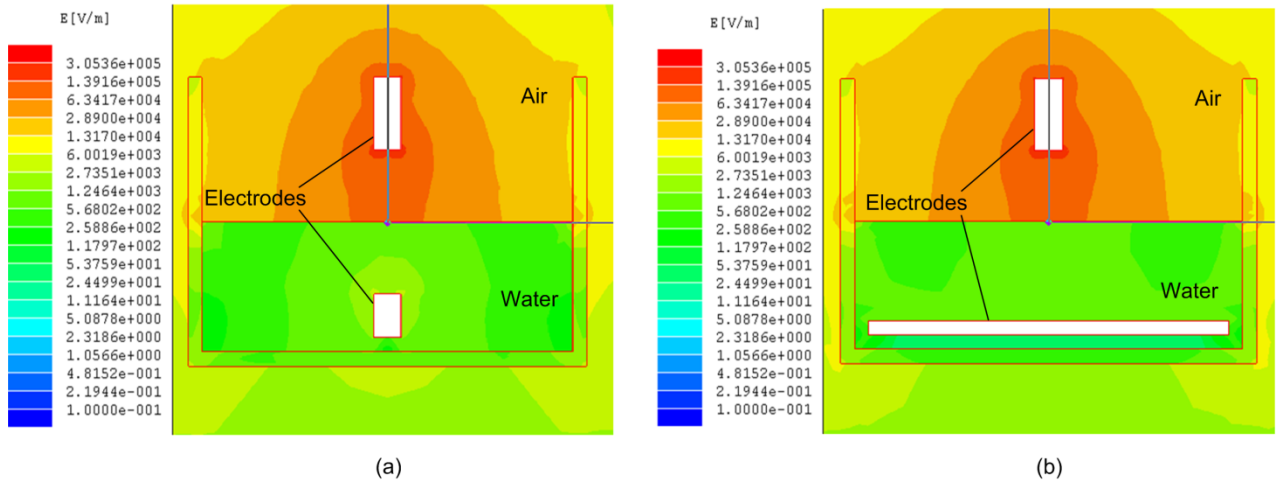

FIGURE 3. Finite Element simulation results for electric field distribution in air-water for: (a) point-to-point and (b) point-to-plane geometries.

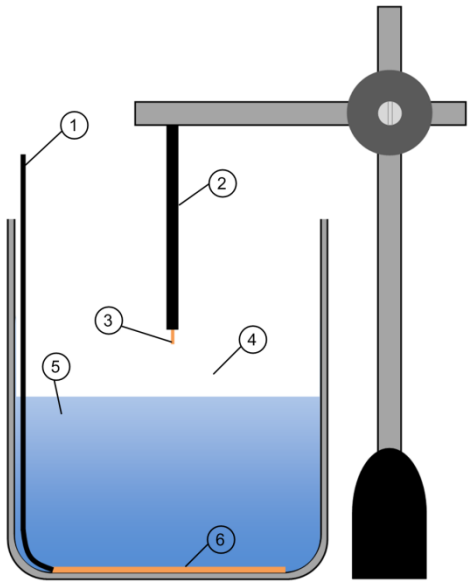

FIGURE 4. Discharge chamber with point-to-plate geometry. (1) plate electrode connection, (2) point electrode connection, (3) copper tip of the electrode, (4) air gap between the point and the water level, (5) water, (6) copper plate.

considered. Therefore two different pulsed power topologies were employed [3, 4, 6]. Here, the circuit schematic and experimental arrangement for both pulsed power system are presented and briefly explained. The solid-state pulsed power supplies are from resonant step-up converter category, since both benefit from the capacitive behavior of the load due to the discharge chamber arrangement.

To generate high DC voltage a modular pulsed power supply based on flyback topology is employed as depicted in Figure 5. The main reasons that such topology has been adopted are [4]:

- Ability to generate high-voltage output from low input DC voltage.
- It is a good candidate for the pulsed power applications with R-C characteristics since it has a current source behavior.
- The transformer in addition to electrical isolation and energy storage, also steps down the reflected voltage across the power switch.
- It is fault tolerant, as the power switch is in off–state during the output pulse.

The operating principle of a flyback converter is based on the stored energy in the magnetizing inductance of the transformer and the transfer of the charged to the output [9]. However, to fulfill the pulsed power applications requirement this results in a bulky transformer. To remedy such a problem series connection of the flyback converters is introduced in [4]. Therefore, the

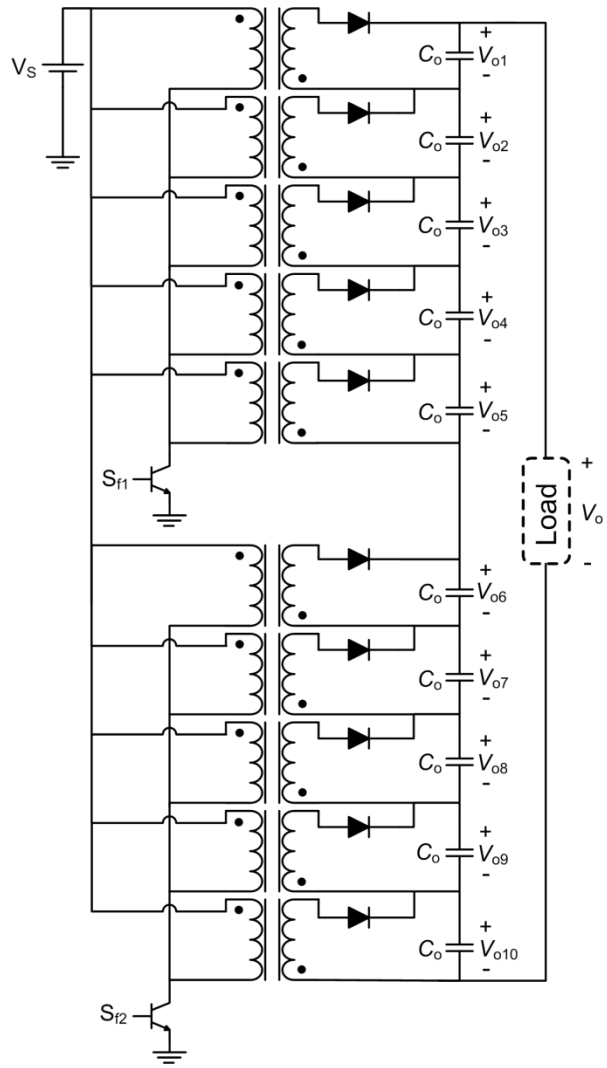

FIGURE 5. Circuit schematic diagram of the ten series connected flyback converters as high voltage DC generator.

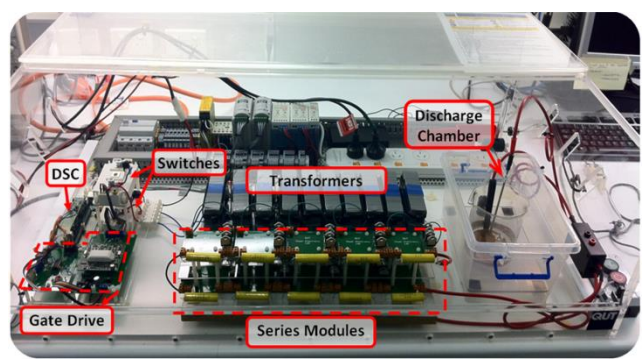

FIGURE 6. Experimental setup for modular flyback topology as high voltage DC generator.

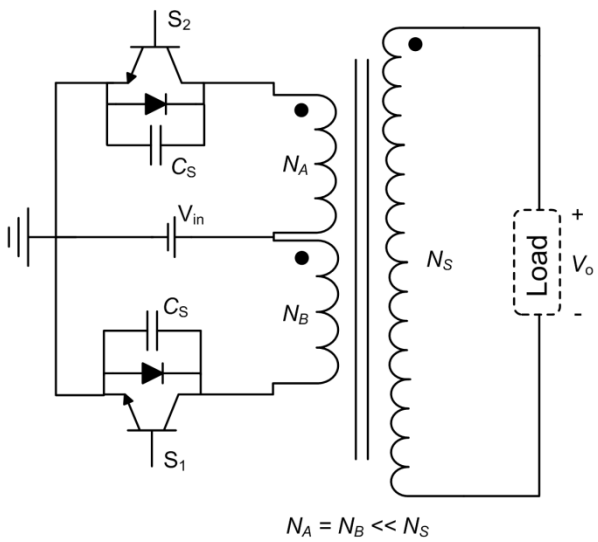

FIGURE 7. Circuit schematic for push-pull topology as high voltage AC generator.

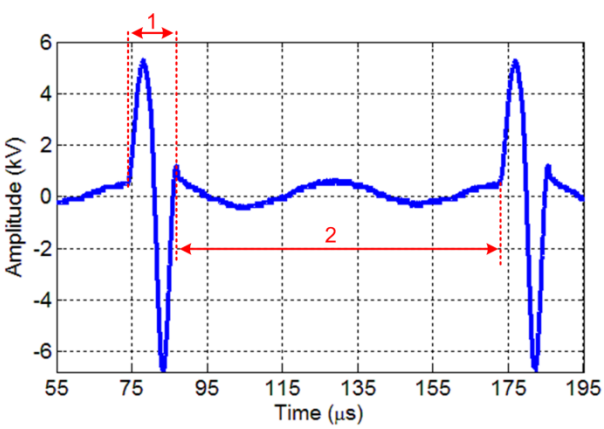

FIGURE 8. Typical measured output voltage of the employed push-pull topology.

injected energy to the output is multiplied by the number of the series connected modules (here ten). Since the power switches at the primary side need to be switched simultaneously, the number of the power switches at the primary side should be kept as low as possible (here two). This is due to the presence of different turn-on and turn-off delays of the power switches.

Figure 6 shows the experimental setup for the employed modular flyback topology. Here, 1700 V IGBT modules (SKM200GB176D) are used as power switches. Semikron Skyper 32-pro gate drive modules are utilized to drive the IGBTs and provide the necessary isolation between the switching-signal ground and the power ground. Four 1000 V diodes, STTH3010,

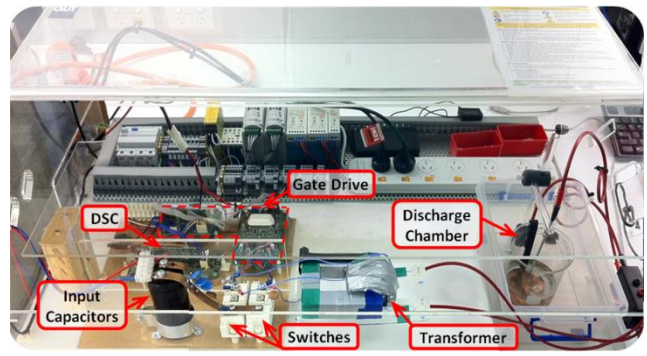

FIGURE 9. Experimental setup for push-pull topology as high voltage AC generator.

are connected in series for each module. A Texas Instrument TMSF28335 DSC (Digital Signal Controller) is used for PWM signal generation. Each step-up transformer is designed with an UU100 core 3C90 grade material ferrite from Ferroxcube with N_1 = 4 and N_2 = 40. As can be seen each flyback module has a C_o = 10 nF capacitor across the output, which results in total output capacitance of 1 nF. In order to maximize the output voltage and rate of rise the total output capacitance of the pulsed power supply (here 1 nF) should be much larger than that of discharge chamber capacitance [4, 8, 9].

To generate high voltage AC waveform, a push-pull topology was employed [3, 6]. Figure 7 depicted the circuit schematic of the pulsed power supply topology. The push-pull inverter contains two switches that are driven with respect to ground. The two switches S_1 and S_2 are switched alternately with a controlled duty ratio to convert input DC voltage into high frequency AC voltage.

By adding the discharge chamber as a load, the presence of the air gap capacitance turns the push-pull inverter into a resonant stage with approximately a sinusoidal output voltage waveform. The frequency of the semi-sinusoidal shape signal is determined by an *LC* circuit comprising of the transformer inductance and capacitances of chamber and the transformer. The generated waveform shape also highly depends on the duty cycle of each switching signals. In addition, to achieve continuous waveform such as sinusoidal an overlap between the switching signals should be considered. The bipolar voltage generation capability of this topology is of interest for sustaining non-thermal plasma in Dielectric Barrier Discharge (DBD) loads, as the bipolar voltage prevents from arcing by clearing charges across the electrodes during each cycle.

Figure 8 illustrates a typical generated waveform of the push-pull converter. As it can be seen, the generated waveform is comprises of two portions. The first portion of the output voltage is generated based on the resonant circuit dominated by the magnetizing inductance and capacitance of the transformer with

air gap capacitance. The period of this part is ~ 12.5 µs. The second portion is the resonance happening during the switches OFF state between the leakage inductance and the capacitances of the transformer and the air gap. The period of this part is equal to 87.5 µs. Therefore, the generated signal has the repetition rate of 10 kHz.

Figure 9 depicted the push-pull topology experimental setup. Here 1200 V IGBT modules, SK75GB123, are used as power switches. The experimental arrangement for gate drive circuit and controller are same as the former one. A center-tapped step-up transformer with an UU100 core 3C90 grade material ferrite from Ferroxcube, are designed with $N_A = N_B = 5$ and $N_S = 300$. It is to be noted that as the secondary side of the transformer contains high number of windings, proper insulation need to be applied between each set of windings. For all the experimentation, the output voltage is measured and captured using a Pintek DP-22Kpro differential probe and RIGOL DS1204B oscilloscope, respectively.

4. RESULTS AND DISCUSSION

Since no difference was observed for point-to-point arrangement in air ambient as discussed in Section 2, to investigate the positive and negative discharges the discharge chamber with point-to-plane geometry at air-water ambient (see Figure 4) was selected for experimentation. Here, the air gap was fixed at 2.5mm and the output voltage level was raised to the point where the first observable discharges were occurred.

For the applied DC voltage, positive discharges achieved with 4.3 kV, while in the negative case the voltage level had to be increased to 5.7 kV. To verify this difference, a high voltage pulse generator was also employed. Applying the bipolar voltage waveform showed the significant dependency of the plasma formation on positive or negative polarity of the applied voltage at the point electrode. Figure 10 illustrates the difference between the applied high voltage bipolar pulses for both positive and negative discharges. For better comparison of the applied voltages, the measurements are also made at the point slightly below the breakdown threshold (blue waveform). As can be seen the peak to peak voltage in positive discharge is 11 kVpp while in negative discharge is 13 kVpp. It is to be mentioned that the applied bipolar pulse has 12.5 µs pulse-width and repetition rate of 10 kHz.

The obtained results indicate that for both applied voltage waveforms the negative discharges happen at higher voltage level compare to the positive one. This is due to the fact that the electrons in the positive discharge are accelerated toward the point electrode which increases electron density close to the positive point as illustrated in Figure 11(a). In the other words, the speed of the streamer developed by the positive applied voltage is greater than that by the negative one [14]. Accelerating high number of electrons increases the possibility of further collisions and hence creation of plasma can occurs at lower electric field strength compared to the negative discharge. However, In the negative discharges the electrons are drift away from the point electrode to the plate which results in distributed impacts (contrary to the positive discharges), which has been depicted in Figure 11(b). Hence, as a consequence the negative discharges occur at higher voltage level comparing with the positive one.

The results presented govern the presence of the difference between the positive and negative discharges not only in terms of the nature of the phenomenon but also the required voltage level. Having such knowledge is beneficial in increasing the system performance and efficiency in pulsed power applications.

5. CONCLUSIONS

In this paper, the effect of discharge polarity on plasma formation has been studied through analyzing the electric field distribution. Moreover, the effects of different structural arrangement, medium and applied voltage waveform on the electric field distribution and consequently discharge polarity have been investigated. In conclusion, the effect of voltage

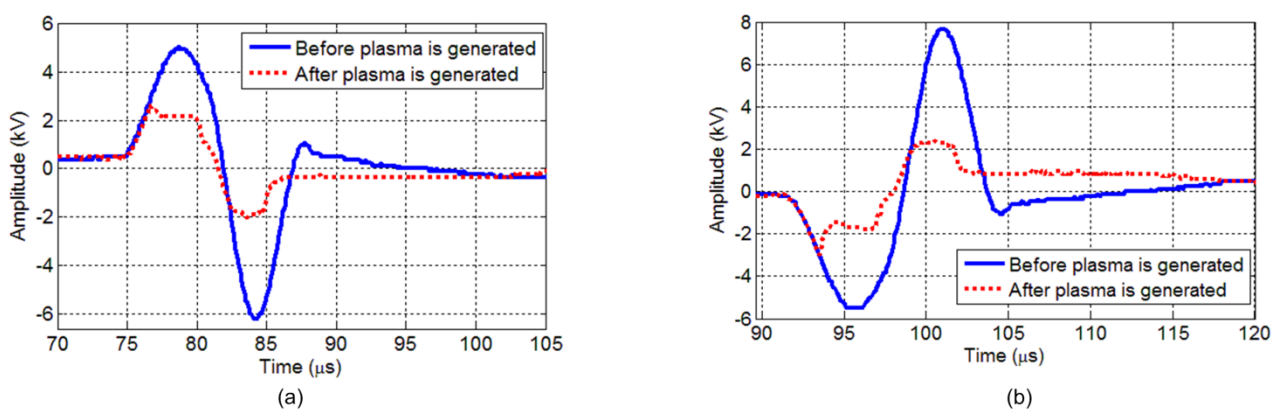

FIGURE 10. Measured applied high voltage AC waveform across the discharge chamber in air-water ambient for: (a) positive discharge and, (b) negative discharge.

FIGURE 11. Electrons impacts in (a) positive discharge and (b) negative discharge.

polarity on plasma generation has been observed and explained through different experiments and Finite Element simulations. Voltage polarity for the positive and negative discharges produces significant difference in the required voltage level. Moreover, the electrodes arrangement and the system medium have major role in electric field formation. This paper provides an insight to the affecting parameters on the discharge polarity using a simple discharge chamber.

With the continuous growth of pulsed power applications more and more sophisticated loads are in use where multitudes of electrode configurations, generated voltage rise time and ambient temperature makes analysis of the electric field distribution significantly complicated. Nevertheless, each pulsed power application represents different challenges which impose varied geometrical requirements. The achieved results in this paper generally indicates that, except especial applications which negative discharges is beneficial, it is more convenient to generate and sustain positive discharges.

FUNDING

Authors would like to thank Queensland University of Technology (QUT) (research fund ARC-DP0986853) and Aalborg University (AAU) for supporting this project.

REFERENCES

[1] H. Akiyama, T. Sakugawa, T. Namihira, K. Takaki, Y. Minamitani, and N. Shimomura, "Industrial Applications of Pulsed Power Technology," *Dielectrics and Electrical Insulation, IEEE Transactions on*, vol. 14, pp. 1051-1064, 2007.

[2] P. Davari, F. Zare, and A. Ghosh, "A flexible solid-state pulsed power topology," in *Power Electronics and Motion Control Conference (EPE/PEMC), 2012 15th International*, 2012, pp. DS2b.12-1-DS2b.12-6.

[3] P. Davari, F. Zare, and A. Ghosh, "Analysing DBD plasma lamp intensity versus power consumption using a push-pull pulsed power supply," in *Power Electronics and Applications (EPE), 2013 15th European Conference on*, 2013, pp. 1-8.

[4] P. Davari, F. Zare, A. Ghosh, and H. Akiyama, "High-Voltage Modular Power Supply Using Parallel and Series Configurations of Flyback Converter for Pulsed Power Applications," *Plasma Science, IEEE Transactions on*, vol. 40, pp. 2578-2587, 2012.

[5] E. Schamiloglu, R. J. Barker, M. Gundersen, and A. Neuber, "Modern Pulsed Power: Charlie Martin and Beyond," *Proceedings of the IEEE*, vol. 92, pp. 1014-1020, 2004.

[6] M. Babaie, P. Davari, F. Zare, M. M. Rahman, H. Rahimzadeh, Z. Ristovski, *et al.*, "Effect of Pulsed Power on Particle Matter in Diesel Engine Exhaust Using a DBD Plasma Reactor," *Plasma Science, IEEE Transactions on*, vol. 41, pp. 2349-2358, 2013.

[7] R. A. Scholl, "Power supplies for pulsed plasma technologies: State-of-the-art and outlook," *Advances Energy Industries, Inc.*, pp. 1-8, 1999.

[8] A. Heidarkhan Tehrani, P. Davari, S. Singh, and A. Oloyede, "Sterilizing tissue-materials using pulsed power plasma," *Journal of Materials Science: Materials in Medicine*, pp. 1-12, 2014/01/22 2014.

[9] P. Davari, F. Zare, and A. Ghosh, "Parallel and series configurations of flyback converter for pulsed power applications," in *Industrial Electronics and Applications (ICIEA), 2012 7th IEEE Conference on*, 2012, pp. 1517-1522.

[10] L. B. Leob, *Electrical Coronas: Their Basic Physical Mechanisms*. Berkeley, CA: Univ. California Press, 1965.

[11] J. S. Chang, P. A. Lawless, and T. Yamamoto, "Corona discharge processes," *Plasma Science, IEEE Transactions on*, vol. 19, pp. 1152-1166, 1991.

[12] W. Douyan, M. Jikuya, S. Yoshida, T. Namihira, S. Katsuki, and H. Akiyama, "Positive- and Negative-Pulsed Streamer Discharges Generated by a 100-ns Pulsed-Power in Atmospheric Air," *Plasma Science, IEEE Transactions on*, vol. 35, pp. 1098-1103, 2007.

[13] Y. Teramoto, Y. Fukumoto, R. Ono, and T. Oda, "Streamer Propagation of Positive and Negative Pulsed Corona Discharges in Air," *Plasma Science, IEEE Transactions on,* vol. 39, pp. 2218-2219, 2011.

[14] K. Yoshinaga, S. Okada, D. Wang, T. Namihira, S. Katsuki, and H. Akiyama, "Effect of Polarity and Rise Time of Applied Pulsed Voltage on Streamer Discharge Phenomena," in *Proceedings of the 2nd Euro-Asian Pulsed Power Conference, Vilnius, Lithuania*, 2008, pp. 1050-1052.

[15] Y. Huang, L. Zhang, X. Zhang, Z. Liu, and K. Yan, "The Plasma-Containing Bubble Behavior Under Pulsed Discharge of Different Polarities," *Plasma Science, IEEE Transactions on,* vol. 43, pp. 567-571, 2015.

[16] P. Lei, H. Kun, and D. Dong Xu, "Effect of Pulse Polarity on Nanosecond Surface Dielectric Barrier Discharge," *Plasma Science, IEEE Transactions on,* vol. 42, pp. 2340-2341, 2014.

[17] B. Locke, M. Sato, P. Sunka, M. Hoffmann, and J.-S. Chang, "Electrohydraulic discharge and nonthermal plasma for water treatment," *Industrial & engineering chemistry research,* vol. 45, pp. 882-905, 2006.

[18] M. Abdel-Salam, M. Nakano, and A. Mizuno, "Electric fields and corona currents in needle-to-meshed plate gaps," *Journal of Physics D: Applied Physics,* vol. 40, p. 3363, 2007.

[19] L. Ghizdavu, I. Suarasan, L. Dascalescu, and R. Morar, "Optimized geometry of a corona electrode arrangement for water ozonization," in *Electrostatics 2003. Series: Institute of Physics Conference Series, ISBN: 978-0-7503-0949-3. Taylor & Francis, Edited by Hywel Morgan, vol. 178, pp. 291-296*, 2004, pp. 291-296.

BIOGRAPHIES

Pooya Davari received B.Sc. and M.Sc. degrees in electronic engineering from the University of Mazandaran, Babol, Iran, and the Ph.D. degree in power electronics from the Queensland University of Technology (QUT), Brisbane, Australia, in 2004, 2008, and 2013, respectively. From 2013 to 2014 he was with Queensland University of Technology, Brisbane, Australia, as a Lecturer. He is currently a postdoctoral researcher with Aalborg University (AAU), Aalborg, Denmark. His research interests include active front-end rectifiers, harmonic mitigation in adjustable speed drives, EMI in power electronics and pulsed power applications.

Firuz Zare received the B.Sc. (Eng.) degree in electronic engineering from the University of Guilan, Rasht, Iran, the M.Sc. degree in power engineering from the K. N. Toosi University of Technology, Tehran, Iran, and the Ph.D. degree in power electronics from the Queensland University of Technology, Brisbane, Australia, in 1989, 1995, and 2001, respectively. He spent several years in industry as a Team Leader and Development Engineer, where he was involved in electronics and power electronics projects. He was with the Queensland University of Technology, Brisbane, Australia, as an Associate Professor. He is currently a Lead Engineer with Danfoss Power Electronics, Graasten, Denmark. His current research interests include problem-based learning in power electronics, power electronics topologies and control, pulsewidth modulation techniques, EMC/EMI in power electronics, and renewable energy systems.

Frede Blaabjerg was with ABB-Scandia, Randers, Denmark, from 1987 to 1988. From 1988 to 1992, he was a Ph.D. Student with Aalborg University, Aalborg, Denmark. He became an Assistant Professor in 1992, an Associate Professor in 1996, and a Full Professor in 1998. He has received 15 IEEE Prize Paper Awards, the IEEE PELS Distinguished Service Award in 2009, the EPE-PEMC Council Award in 2010, the IEEE William E. Newell Power Electronics Award in 2014, and the Villum Kann Rasmussen Research Award in 2014. An IEEE Fellow, was the Editor-in-Chief of the IEEE Transactions on Power Electronics from 2006 to 2012. He has been Distinguished Lecturer for the IEEE Power Electronics Society from 2005 to 2007 and for the IEEE Industry Applications Society from 2010 to 2011. He was nominated in 2014 by Thomson Reuters to be between the most 250 cited researchers in Engineering in the world. His current research interests include power electronics and its applications such as in wind turbines, PV systems, reliability, harmonics and adjustable speed drives.