Aalborg Universitet

AALBORG UNIVERSITY
DENMARK

Delta Power Control Strategy for Multi-String Grid-Connected PV Inverters

Sangwongwanich, Ariya; Yang, Yongheng; Blaabjerg, Frede; Sera, Dezso

Published in:
Proceedings of the 8th Annual IEEE Energy Conversion Congress and Exposition (ECCE) 2016

DOI (link to publication from Publisher):
10.1109/ECCE.2016.7854998

Publication date:
2016

Document Version
Early version, also known as pre-print

Link to publication from Aalborg University

Citation for published version (APA):
Sangwongwanich, A., Yang, Y., Blaabjerg, F., & Sera, D. (2016). Delta Power Control Strategy for Multi-String Grid-Connected PV Inverters. In *Proceedings of the 8th Annual IEEE Energy Conversion Congress and Exposition (ECCE) 2016* IEEE Press. https://doi.org/10.1109/ECCE.2016.7854998

General rights
Copyright and moral rights for the publications made accessible in the public portal are retained by the authors and/or other copyright owners and it is a condition of accessing publications that users recognise and abide by the legal requirements associated with these rights.

- Users may download and print one copy of any publication from the public portal for the purpose of private study or research.
- You may not further distribute the material or use it for any profit-making activity or commercial gain
- You may freely distribute the URL identifying the publication in the public portal -

Take down policy
If you believe that this document breaches copyright please contact us at vbn@aub.aau.dk providing details, and we will remove access to the work immediately and investigate your claim.

Downloaded from vbn.aau.dk on: April 25, 2024

Delta Power Control Strategy for Multi-String Grid-Connected PV Inverters

Ariya Sangwongwanich[1], Yongheng Yang[2], *IEEE Member*, Frede Blaabjerg[3], *IEEE Fellow*, and Dezso Sera[4], *IEEE Member*

Department of Energy Technology
Aalborg University
Pontoppidanstraede 101, Aalborg, DK-9220 Denmark
ars@et.aau.dk[1], yoy@et.aau.dk[2], fbl@et.aau.dk[3], des@et.aau.dk[4]

***Abstract*—With a still increasing penetration level of grid-connected PV systems, more advanced active power control functionalities have been introduced in certain grid regulations. A delta power constraint, where a portion of the active power from the PV panels is reserved during operation, is required for grid support (e.g., during frequency deviation). In this paper, a cost-effective solution to realize delta power control for grid-connected PV systems is presented, where the residential/commercial multi-string PV inverter configuration is adopted. This control strategy is a combination of Maximum Power Point Tracking (MPPT) and Constant Power Generation (CPG) modes. In this control scheme, one PV string operating in the MPPT mode estimates the available power, while the other PV strings regulate the total PV power by the CPG control strategy in such a way that the delta power constraint for the entire PV system is achieved. Simulations and experiments have been performed on a 3-kW single-phase grid-connected PV system. The results have confirmed the effectiveness of the delta power control strategy, where the power reserve according to the delta power constraint is achieved under several operating conditions.**

***Index Terms*—Active power control, reserved power control, maximum power point tracking, constant power generation control, PV systems, grid-connected power converters.**

I. Introduction

Photovoltaic (PV) systems have been increasingly integrated into the power grid in recent years, mainly driven by the continue reduction in the system installation costs [1]. More PV systems are expected to be installed in the future and will share a major part of the power production, especially in residential scale systems [1]. Accordingly, the importance of PV participation in the grid control becomes clear, and is being introduced in certain grid regulations [2]–[6]. For instance, in Germany, the frequency-dependent active power reduction has been introduced for medium-voltage systems, as shown in Fig. 1 [2]. Similar requirements have also been defined in other grid codes [3], [4], where PV systems are not allowed to be immediately disconnected from the grid during the frequency deviation. Instead, the output active power from the PV systems has to be reduced to a certain level, in order to support the grid and also to provide power reserve. In the Danish grid code, a delta power constraint is defined [4] (also called reserved power control), whose principle is illustrated in Fig. 2. For example, the delta power constraint is currently used for potential frequency response in large-scale PV plants. As a penetration level of residential/commercial-scale of PV systems is still increasing, this requirement is also expected to be introduced in low-voltage grids/networks, where a majority of the PV system is connected to, in the near future.

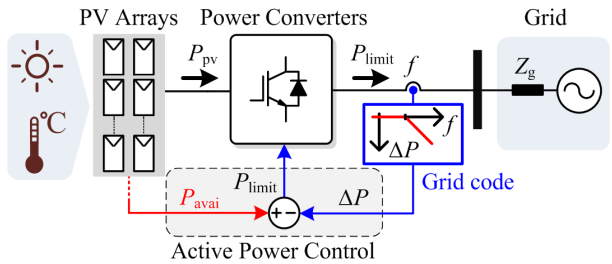

Fig. 1. Grid-connected PV systems with frequency-dependent active power reduction control, where P_{pv} is the PV output power, P_{limit} is the power limit level (injected output power), P_{avai} is the available PV output power, ΔP is the required amount of reserved power, f is the grid frequency.

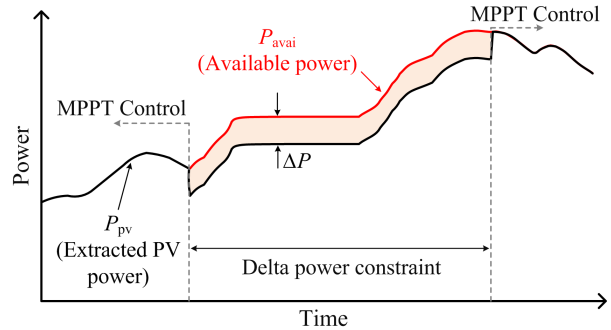

Fig. 2. Delta power constraint defined in the Danish grid code [4].

In the prior-art work, there are mainly three approaches to realize Delta Power Control (DPC) [6]–[9]: 1) integrating energy storage systems, 2) applying a dump load to dissipate excess power, and 3) limiting the extracted PV power by modifying the Maximum Power Point Tracking (MPPT) algorithms. Integrating energy storage systems usually leads to higher cost due to the energy storage devices, while installing a dump load also requires extra components (e.g., resistance load with a

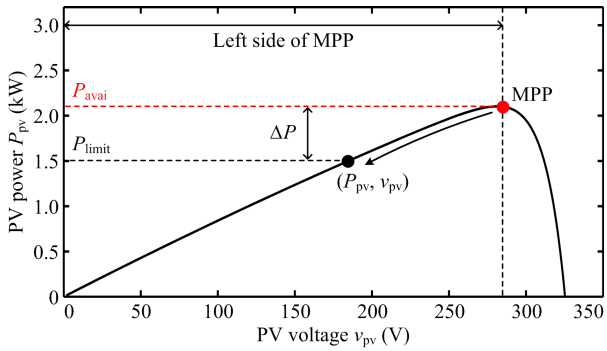

Fig. 3. Power-voltage characteristic of the PV panels with the operating point at the power limit P_{limit}.

controller to control the power flow), increasing the complexity of the overall system [10], [11]. Therefore, the third approach is more cost-effective, and will be considered in this paper. In this approach, the operating point of the PV system in the Power-Voltage (P-V) curve is regulated below the Maximum Power Point (MPP) in order to limit the PV power P_{pv} to a certain level P_{limit}, as it is shown in Fig. 3. Operating the PV system below the MPP is not a new issue, as it has been previously applied to other applications (e.g., constant power generation, microgrid, fault-ride through) [12]–[23]. However, the challenge to realize the DPC strategy with this approach is the estimation of the available PV output power P_{avai} during operation, which is required in order to calculate the set-point P_{limit} according to the delta power constraint (i.e., $P_{\text{limit}} = P_{\text{avai}} - \Delta P$) [7], [8], [24]. One method to estimate the available PV power is to use the irradiance measurement together with the PV array characteristic model in order to estimate the PV power at the MPP, as implemented in [7], [9]. However, this method requires an accurate irradiance measurement, which is usually not available in the residential scale PV systems (e.g., roof-top PV systems) considering the cost. Besides, a very high accuracy model of the PV arrays is also needed, which is typically not feasible due to aging, faults, etc. This will increase the cost and the complexity of the overall system. Alternatively, the available power P_{avai} can be estimated by means of a quadratic approximation curve-fitting method [8], [24], where the irradiance measurement is not required. In this approach, the PV voltage at the MPP V_{MPP} is first estimated from the present operating condition. Then, the estimation of the PV power at the MPP is achieved by using the estimated V_{MPP} with a combination of linear and quadratic approximation [24]. However, this method also relies on a model-based approach, which is not very generic and the estimation accuracy is compromised (due to the curve-fitting approximation). In light of the above discussions, it calls for a simple but effective solution to estimate the available PV power P_{avai} and thus to flexibly regulate the extracted PV power P_{pv} according to the delta power constraint.

Actually, most residential/commercial PV systems (e.g., with the rated power of 1 - 30 kW) consist of multiple PV strings [25], [26], which can be controlled independently with

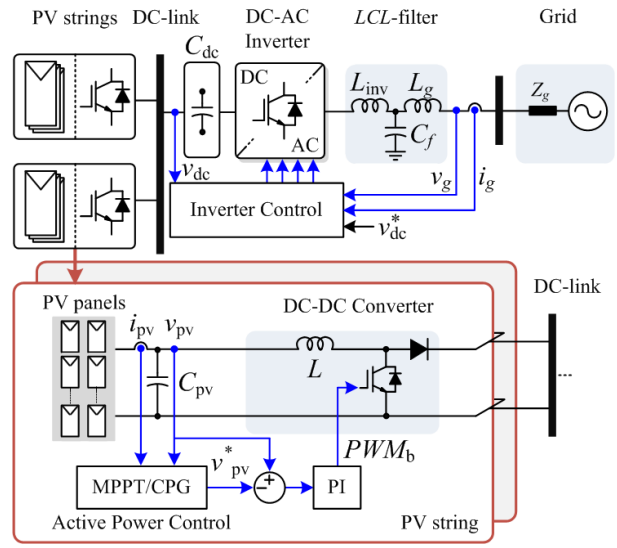

Fig. 4. System configuration and control structure of multi-string grid-connected PV inverters [25].

different active power control strategies. Due to this characteristic of multi-string PV systems, a concept of coordinated control to realize delta power control strategy for such grid-connected PV systems has been discussed in literature [20], [27], [28]. In particular, one (or more) master PV string is assigned to operate in the MPPT mode and estimate the available PV power P_{avai}, while the other slave PV strings are controlled to operate in the Constant Power Generation (CPG) mode (also called active power reserve in some literature), where the power limits P_{limit} are set according to the master PV string. In this way, the total PV power production can be flexibly controlled considering the delta power constraint. This approach requires neither energy storage systems nor irradiance measurements, and it is being a cost-effective solution. However, a detailed explanation of the coordinated control algorithm to realize the DPC strategy with multi-string PV system has not yet been discussed in the literature, making it difficult for practical implementations. In addition, performance verification of the DPC strategy in real operation has also not been investigated (e.g., during slow changing and fast changing of the irradiance conditions).

The main aim of this paper is to present the DPC control scheme applied to the multi-string PV system. The detailed explanation of the coordinated control between the master PV string (with MPPT mode) and the slave PV strings (with CPG mode) is given in Section III. Then, simulations and experiments on a 3 kW two-stage PV system are conducted to confirm the effectiveness of the DPC strategy under several test conditions. Concluding remarks are given in Section V.

II. System Configuration and Control Scheme of Multi-String PV Inverters

In the residential/commercial-scale PV systems (e.g., rated power of 1 - 30 kW), the multi-string inverter configuration shown in Fig. 4 is commonly used [25], [26], where several PV

panels are connected in series and/or parallel to form a string. Each PV string is equipped with a dc-dc boost converter to step up the PV voltage v_{pv} to match the required dc-link voltage v_{dc}. Typically, the boost converter also performs the active power control (e.g., the MPPT control or the CPG control) for each PV string individually. This gives a possibility to coordinate the active power control of each PV string in order to achieve the delta power constraint. This will be discussed in the next section. The total extracted power by the dc-dc converters is subsequently delivered to the dc-link. Then, one dc-ac inverter injects the extracted PV power to the ac grid by regulating the dc-link voltage to be constant through the control of the grid current i_g [29].

III. Delta Power Control (DPC) Strategy for Multi-String PV Inverters

The concept of the DPC strategy is that the PV system needs to reserve a certain amount of PV power ΔP during operation, where the delta power constraint can be summarized as:

$$P_{\text{pv}} = P_{\text{avai}} - \Delta P \tag{1}$$

In order to control the PV output power P_{pv} according to the DPC strategy in (1), the other two quantities (i.e., the available power P_{avai} and the amount of power reserve ΔP) must be known. Typically, the amount of power reserve ΔP can either be calculated as a function of the grid frequency deviation or set by the system operator [7]–[9]. Thus, two challenging issues remain: 1) estimating the available power P_{avai} during the operation without irradiance measurements and 2) regulating the extracted PV power P_{pv} according to the DPC constraint in (1). As mentioned previously, the available power can be estimated by one of the PV strings that performs the MPPT control, while the latter issue can be achieved by the CPG control strategy. Thus, the focus of this work is on the active power control of the PV string (see Fig. 4), where the MPPT and the CPG operation are coordinately controlled. For the sake of simplicity, two PV strings in Fig. 4 are considered. The control structure is further illustrated in Fig. 5 and the total output power can thus be expressed as:

$$P_{\text{pv}} = P_{\text{pv1}} + P_{\text{pv2}} \tag{2}$$

A. Estimation of the available output power - MPPT operation for the master PV string

Estimating the available PV power is very challenging, especially when the irradiance is not measured. However, PV strings in residential/commercial scale PV systems are usually located close to each other (e.g., on the same rooftop), in order to minimize the space utilization. This implies that most PV strings will have similar irradiance and ambient temperature profiles, and therefore similar power production profile (assuming that there is no partial shading situation). If one PV string as the master operates in the MPPT mode, its output power P_{pv1} can be used to estimate the available power of the rest PV strings as the slaves. Thus, the total

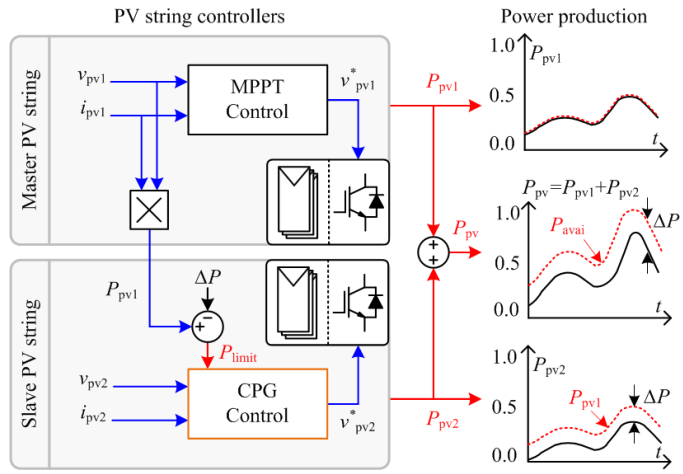

Fig. 5. Control scheme of the Delta Power Control (DPC) strategy and the resultant power production, where the master and slave PV strings operate in the MPPT and the Constant Power Generation (CPG) modes, respectively.

available power of the PV plant P_{avai} can be simply estimated by multiplying P_{pv1} with the number of PV strings as

$$P_{\text{avai}} = \approx N_{\text{pv}} P_{\text{pv1}} \tag{3}$$

where N_{pv} is the number of PV strings in the system. In this paper, $N_{\text{pv}} = 2$ is considered as also indicated in Fig. 4.

Notably, in the case of a larger scale PV plant (i.e., more PV strings), several PV strings can be assigned to perform the MPPT operation (as master PV strings). Then, there are two possibilities for estimating the available power of the PV plant: 1) Global estimation - The averaged value of output power from all master PV strings is used globally for estimating the available power of the total system or 2) Local estimation - The measured output power of each master PV string is used locally for estimating the available power of a local group of PV strings. The choice between these two approaches is not obvious as it depends on both the physical arrangement and the economic factor of the systems. The global estimation offers a simple implementation but the accuracy is compromised, especially for a large area PV plant, where the irradiance profile of different PV strings can vary considerably. Thus, it is not very suitable for a large scale PV system with a wide-area distribution. On the other hand, the local estimation offers a higher estimation accuracy, but all the local groups of PV strings need to be coordinated controlled by a central controller in order to ensure that the total output power follows the DPC constraint in (1). This leads to more complicated control algorithms and communication systems, which may not be suitable for a small/medium-scale PV plant from the economical point of view.

B. Compensation of the output power - CPG operation for the slave PV strings

Once the available power P_{avai} is estimated, the slave PV string has to regulate its output power in order to provide the total extracted power (from both PV strings) P_{pv} according

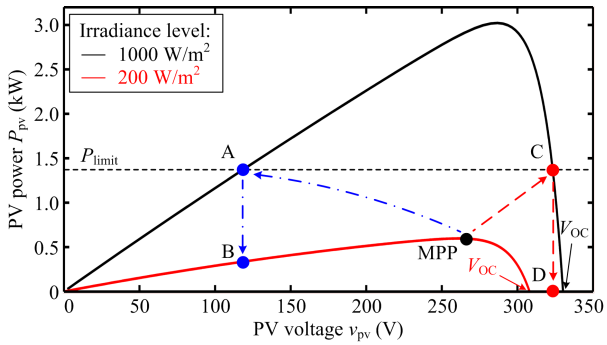

Fig. 6. Possible operating regions of the CPG strategy, where the instability issue during the fast decreasing irradiance condition is illustrated.

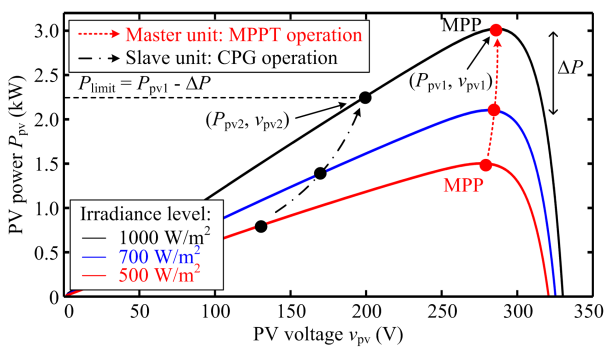

Fig. 7. Operational principle of the Delta Power Control (DPC) with combined MPPT and CPG strategies.

TABLE I
PARAMETERS OF THE TWO-STAGE SINGLE-PHASE PV SYSTEM (FIG. 4).

PV rated power	3 kW (i.e., 1.5 kW/PV string)
Boost converter inductor	L = 1.8 mH
PV-side capacitor	C_{pv} = 1000 μF
DC-link capacitor	C_{dc} = 1100 μF
LCL-filter	L_{inv} = 4.8 mH, L_{g} = 4 mH, C_f = 4.3 μF
Switching frequency	Boost converter: f_b = 16 kHz, Full-Bridge inverter: f_{inv} = 8 kHz
DC-link voltage	v^*_{dc} = 450 V
Grid nominal voltage (RMS)	V_g = 230 V
Grid nominal frequency	ω_0 = $2\pi\times50$ rad/s

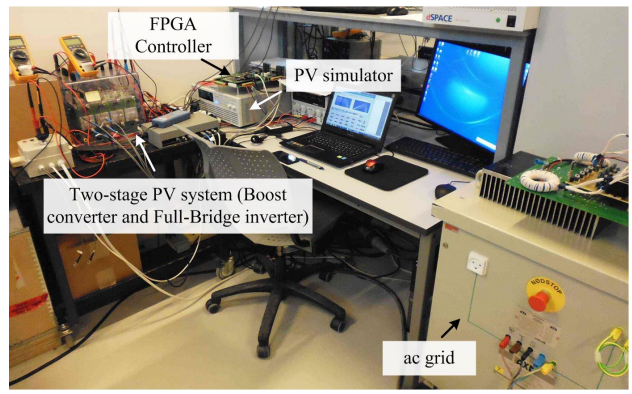

Fig. 8. Experimental setup of the two-stage grid-connected PV system.

to (1). As discussed in [8], [13], the output power of the PV string can be regulated below the MPP using the CPG strategy. From the Power-Voltage (P-V) characteristic of the PV arrays in Fig. 6, there are two possible operating points for regulating the PV power P_{pv} at a certain set-point P_{limit} (i.e., at A and C in Fig. 6). It has been shown in [13] that the operating region at the right side of the MPP (i.e., at C in Fig. 6) may introduce unstable operation during a fast decreasing irradiance condition (e.g., caused by passing clouds). This is due to the fast decrease in open-circuit voltage of the PV arrays, when the irradiance level suddenly drops (e.g., from 1000 to 200 W/m^2). Under this circumstance, the operating point of the PV system may fall into the open-circuit condition, if the PV system was previously operating at the right side of the MPP (i.e., C→D). This is not the case when the PV system regulates the PV power at the left side of the MPP, as the operating point will not go to the open-circuit condition during a fast irradiance drop (i.e., A→B). Nevertheless, operating at the lower PV voltage requires a higher conversion ratio (i.e., $v_{\text{dc}}/v_{\text{pv}}$), which it may decrease the efficiency of the boost converter, but it is beyond the scope of this paper [30]. Thus, in order to ensure a stable operation, the PV voltage v_{pv2} is regulated at the left side of the MPP (i.e., at A in Fig. 6) in order to control the PV power according to $P_{\text{pv2}} = P_{\text{limit}}$.

In contrast to the CPG algorithm in [12]–[14], where a constant set-point P_{limit} is used, the DPC method dynamically changes the value of P_{limit} during the operation in order to achieve the delta power constraint. Since the master PV string is operating in the MPPT mode with the extracted power according to (3), the PV power of the slave PV string P_{pv2} has to be limited according to (7), i.e., $P_{\text{limit}} = P_{\text{pv1}} - \Delta P$.

$$P_{\text{pv2}} = P_{\text{pv}} - P_{\text{pv1}} \quad (4)$$
$$= (P_{\text{avai}} - \Delta P) - P_{\text{pv1}} \quad (5)$$
$$= (2P_{\text{pv1}} - \Delta P) - P_{\text{pv1}} \quad (6)$$
$$= P_{\text{pv1}} - \Delta P \quad (7)$$

Consequently, the total extracted power according to (1) can be achieved. Fig. 7 illustrates the operational principle of the DPC strategy where the master PV string is assigned to operate with the MPPT operation and the slave PV string regulates its output power according to (7) by continuously operating in CPG mode. Notably, P_{pv1} can be easily obtained by measuring i_{pv1} and v_{pv1} (i.e., $P_{\text{pv1}} = i_{\text{pv1}} v_{\text{pv1}}$), as it is shown in Fig. 5.

IV. PERFORMANCE VERIFICATION OF THE DELTA POWER CONTROL (DPC) STRATEGY

The effectiveness of the DPC strategy has been verified on a PLECS/Simulink co-simulation platform and by experiments with the system configuration shown in Fig. 4. The experimental test-rig is shown in Fig. 8, where the system parameters are given in Table I. The reference amount of power reserve ΔP is chosen to be 200 W, and the DPC strategy is activated when the total PV output power P_{pv} is higher than 2 kW,

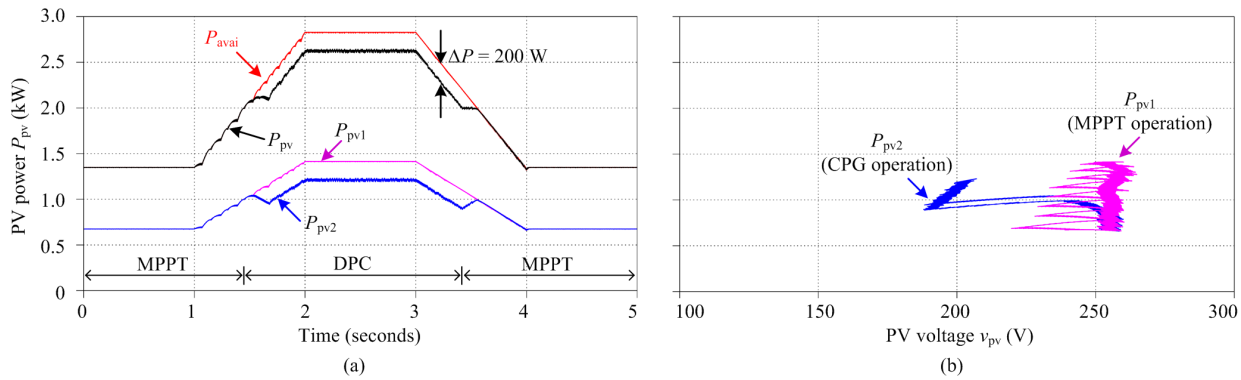

Fig. 9. Simulation results of the DPC strategy under a trapezoidal solar irradiance profile with the reference reserved power ΔP of 200 W: (a) PV output power and (b) operating trajectory in the power-voltage curve of the PV panels.

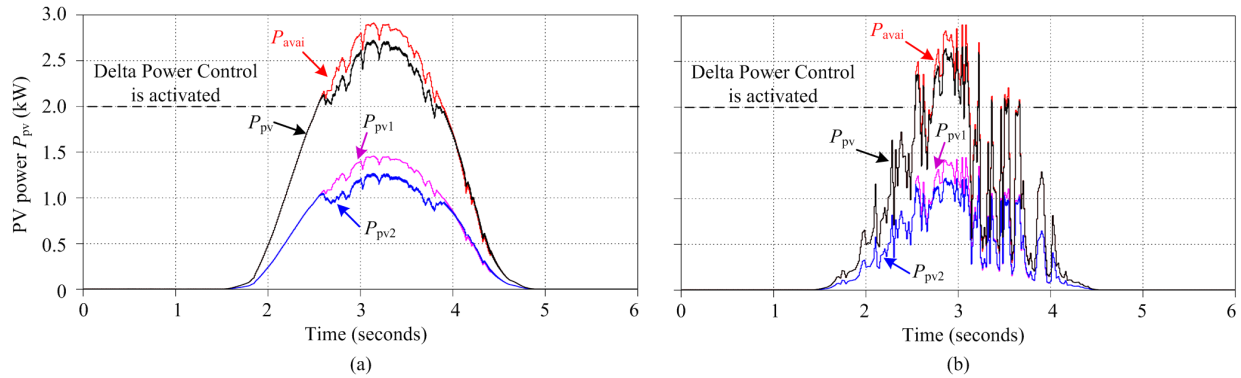

Fig. 10. PV output power (simulations) of the multi-string grid-connected PV system with the DPC strategy under: (a) a clear day and (b) a cloudy day irradiance conditions with the reference reserved power ΔP of 200 W.

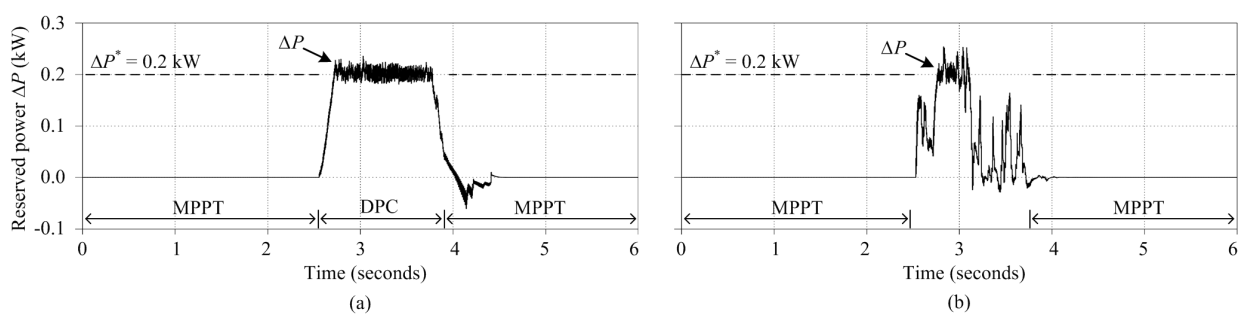

Fig. 11. Reserved power (simulations) of the multi-string grid-connected PV system with the DPC strategy under: (a) a clear day and (b) a cloudy day irradiance conditions with the reference reserved power ΔP of 200 W.

i.e., $P_{pv} > 2$ kW. First, a trapezoidal solar irradiance profile has been used in simulation, as it is shown in Fig. 9. It can be seen in Fig. 9(a) that the PV power of the slave PV string P_{pv2} decreases during the DPC operation period by the required amount of power reserve ΔP, compared to P_{pv1} of the master PV string with the MPPT operation. The operational mode transitions can also be observed from the operation P-V trajectory in Fig. 9(b), where P_{pv2} is dynamically regulated at the left side of the MPP (i.e., CPG operation) compared to the MPPT operating trajectory of the master PV string P_{pv1}, when the DPC strategy is activated. Consequently, the total extracted power P_{pv} follows the delta power constraint (i.e., similar to that in Fig. 2). The performances of the DPC strategy are further examined with two real-field daily solar irradiance and temperature profiles through simulations (with accelerated tests due to the limited simulation time). The power extraction of the DPC strategy under a clear day and a cloudy day conditions are shown in Fig. 10. Then, the corresponding reserved power $\Delta P = P_{avai} - P_{pv}$ during the operation of the above two conditions is shown in Fig. 11. It can be seen

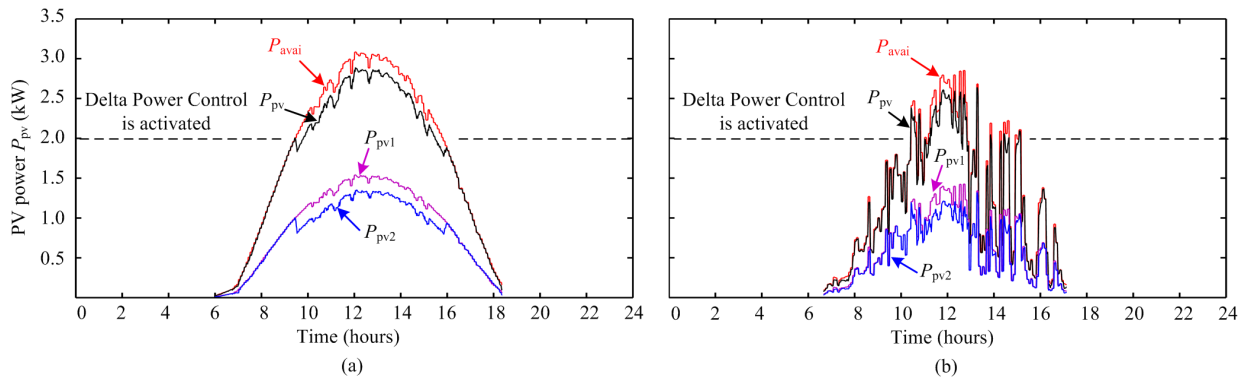

Fig. 12. PV output power (experiments) of the multi-string grid-connected PV system with the DPC strategy under: (a) a clear day and (b) a cloudy day irradiance conditions with the reference reserved power ΔP of 200 W.

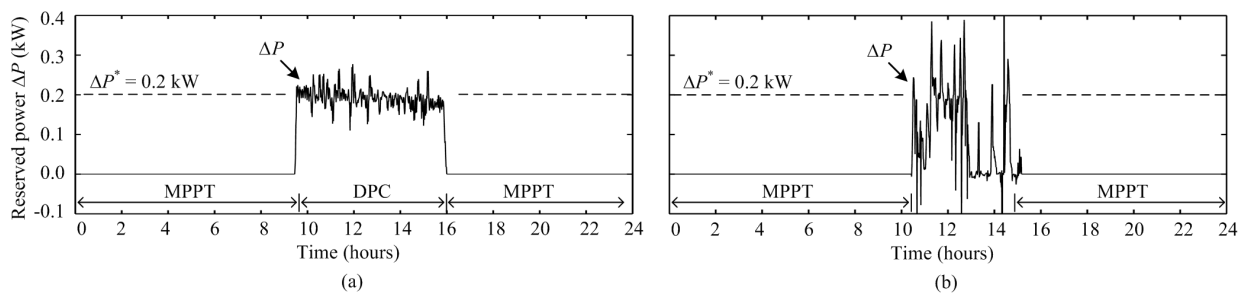

Fig. 13. Reserved power (experiments) of the multi-string grid-connected PV system with the DPC strategy under: (a) a clear day and (b) a cloudy day irradiance conditions with the reference reserved power ΔP of 200 W.

from Figs. 10(a) and 11(a) that the total PV power P_{pv} and the reserved power ΔP are accurately controlled according to the delta power constraint, i.e., ΔP = 200 W with the DPC strategy during a clear day condition. Similar behaviors are also observed under a cloudy day condition in Figs. 10(b) and 11(b). In this case, the dynamics of the controller are more challenged due to the rapidly changing irradiance condition. Nevertheless, the reserved power ΔP can still be controlled with a good accuracy during the DPC operation (e.g., during t = 2.7 - 3.2 s), as it can be seen in Fig. 11(b).

Experimental tests have also been performed with the same real-field solar irradiance and temperature profiles, in order to verify the effectiveness of the DPC strategy in real operations. In those tests, a PV simulator has been adopted, where the solar irradiance and ambient temperature profiles are programmed. It should be mentioned that the coordinated control between the master PV string and the slave PV string is implemented off-line due to the availability of lab facilities. More precisely, the master PV string is first operated with the MPPT operation and its output power P_{pv1} is measured. Then, the test is repeated for the slave PV string where the recorded PV output power from the master PV string P_{pv1} is used for estimating available power when calculating the set-point P_{limit} of the slave PV string. Figs. 12 and 13 show the PV output power and the corresponding reserved PV power of the PV system with the DPC strategy. It can be seen that the experimental results in Figs. 12 and 13 are in a close agreement with the simulation results in Figs. 10 and 11. Thus, the experimental results also verify the effectiveness of the delta power control strategy.

V. Conclusion

A delta power control strategy for multi-string grid-connected PV systems has been discussed in this paper. In contrast to the prior-art solutions, the presented strategy offers a cost-effective solution to realize the delta power control without extra component requirements (e.g., energy storage devices, irradiance measurements). This is achieved by coordinately controlling some PV strings in the master-operation mode (i.e., MPPT) and some in the slave-operation mode (i.e., CPG operation according to the delta power constraint). Particularly, a master PV string operates in the MPPT mode to determine the total available PV power; the other slave PV strings use the estimated available power from the master PV string to calculate their operating point in the P-V characteristic curve of the PV arrays, and regulate the PV power at the left side of the MPP with the CPG operation. This leads to a delta power production for the entire systems, while ensuring a stable operation. The effectiveness of the delta power control strategy has been verified by simulations and experiments, where the delta power production is achieved and the reserved power is accurately controlled.

ACKNOWLEDGMENT

This work was supported in part by the European Commission within the European Unions Seventh Framework Program (FP7/2007-2013) through the SOLAR-ERA.NET Transnational Project (PV2.3 - PV2GRID), by Energinet.dk (ForskEL, Denmark, Project No. 2015-1-12359), and in part by the Research Promotion Foundation (RPF, Cyprus, Project No. KOINA/SOLAR-ERA.NET/0114/02).

REFERENCES

[1] Fraunhofer ISE, "Recent Facts about Photovoltaics in Germany," April 22, 2016. [Online]. Available: http://www.pv-fakten.de/.

[2] BDEW, "Technische richtlinie erzeugungsanlagen am mittelspannungsnetz richtlinie fur anschluss und parallelbetrieb von erzeugungsanlagen am mittelspannungsnetz," Jun. 2008.

[3] European Network of Transmission System Operators for Electricity, "Network code for requirements for grid connection applicable to all generators," Tech. Rep., Mar. 2013. [Online]. Available: https://www.entsoe.eu.2013

[4] Energinet.dk, "Technical regulation 3.2.2 for PV power plants with a power output above 11 kW," Tech. Rep., 2015.

[5] Y. Yang, P. Enjeti, F. Blaabjerg, and H. Wang, "Wide-scale adoption of photovoltaic energy: Grid code modifications are explored in the distribution grid," *IEEE Ind. Appl. Mag.*, vol. 21, no. 5, pp. 21–31, Sep. 2015.

[6] A. Hoke and D. Maksimovic, "Active power control of photovoltaic power systems," in *Proc. of SuSTech*, pp. 70–77, Aug 2013.

[7] A. Hoke, E. Muljadi, and D. Maksimovic, "Real-time photovoltaic plant maximum power point estimation for use in grid frequency stabilization," in *Proc. of COMPEL*, pp. 1–7, July 2015.

[8] S. Nanou, A. Papakonstantinou, and S. Papathanassiou, "Control of a PV generator to maintain active power reserves during operation," in *Proc. of EU PVSEC*, pp. 4059–4063, 2012.

[9] B.-I. Craciun, T. Kerekes, D. Sera, and R. Teodorescu, "Frequency support functions in large PV power plants with active power reserves," *IEEE J. Emerg. Sel. Topics Power Electron.*, vol. 2, no. 4, pp. 849–858, Dec. 2014.

[10] W. A. Omran, M. Kazerani, and M. M. A. Salama, "Investigation of methods for reduction of power fluctuations generated from large grid-connected photovoltaic systems," *IEEE Trans. on Energy Convers.*, vol. 26, no. 1, pp. 318–327, Mar. 2011.

[11] S. Shivashankar, S. Mekhilef, H. Mokhlis, and M. Karimi, "Mitigating methods of power fluctuation of photovoltaic (PV) sources - a review," *Renewable and Sustainable Energy Reviews*, vol. 59, pp. 1170 – 1184, 2016.

[12] Y. Yang, H. Wang, F. Blaabjerg, and T. Kerekes, "A hybrid power control concept for PV inverters with reduced thermal loading," *IEEE Trans. Power Electron.*, vol. 29, no. 12, pp. 6271–6275, Dec. 2014.

[13] A. Sangwongwanich, Y. Yang, F. Blaabjerg, and H. Wang, "Benchmarking of constant power generation strategies for single-phase grid-connected photovoltaic systems," in *Proc. of APEC*, pp. 370–377, Mar. 2016.

[14] A. Sangwongwanich, Y. Yang, and F. Blaabjerg, "High-performance constant power generation in grid-connected PV systems," *IEEE Trans. Power Electron.*, vol. 31, no. 3, pp. 1822–1825, Mar. 2016.

[15] R.G. Wandhare and V. Agarwal, "Precise active and reactive power control of the PV-DGS integrated with weak grid to increase PV penetration," in *Proc. of PVSC*, pp. 3150-3155, Jun. 2014.

[16] W. Cao, Y. Ma, J. Wang, L. Yang, J. Wang, F. Wang, and L. Tolbert, "Two-stage PV inverter system emulator in converter based power grid emulation system," in *Proc. of ECCE*, pp. 4518-4525, Sep. 2013.

[17] C. Rosa, D. Vinikov, E. Romero-Cadaval, V. Pires, and J. Martins, "Low-power home PV systems with MPPT and PC control modes," in *Proc. of CPE*, pp. 58–62, Jun. 2013.

[18] A. Urtasun, P. Sanchis, and L. Marroyo, "Limiting the power generated by a photovoltaic system," in *Proc. of SSD*, pp. 1-6, Mar. 2013.

[19] L. D. Watson and J. W. Kimball, "Frequency regulation of a microgrid using solar power," in *Proc. of APEC*, pp. 321–326, Mar. 2011.

[20] S. Bacha, D. Picault, B. Burger, I. Etxeberria-Otadui, and J. Martins, "Photovoltaics in microgrids: An overview of grid integration and energy management aspects," *IEEE Ind. Electron. Mag.*, vol. 9, no. 1, pp. 33–46, Mar. 2015.

[21] D. Wu, F. Tang, T. Dragicevic, J. C. Vasquez, and J. M. Guerrero, "Autonomous active power control for islanded ac microgrids with photovoltaic generation and energy storage system," *IEEE Trans. on Energy Convers.*, vol. 29, no. 4, pp. 882–892, Dec 2014.

[22] Y. Chen, C. Tang, and Y. Chen, "PV power system with multi-mode operation and low-voltage ride-through capability," *IEEE Trans. Ind. Electron.*, vol. 62, no. 12, pp. 7524–7533, Dec. 2015.

[23] M. Mirhosseini, J. Pou, and V. G. Agelidis, "Single- and two-stage inverter-based grid-connected photovoltaic power plants with ride-through capability under grid faults," *IEEE Trans. on Sustain. Energy*, vol. 6, no. 3, pp. 1150–1159, July 2015.

[24] H. Xin, Z. Lu, Y. Liu, and D. Gan, "A center-free control strategy for the coordination of multiple photovoltaic generators," *IEEE Trans. Smart Grid.*, vol. 5, no. 3, pp. 1262–1269, May 2014.

[25] S.B. Kjaer, J.K. Pedersen, and F. Blaabjerg, "A review of single-phase grid-connected inverters for photovoltaic modules," *IEEE Trans. Ind. Appl.*, vol. 41, no. 5, pp. 1292–1306, Sep. 2005.

[26] SMA, "Medium power solutions," Sunny family 2011/2012, Tech. Rep.

[27] B.-I. Craciun, S. Spataru, T. Kerekes, D. Sera, and R. Teodorescu, "Internal active power reserve management in large scale PV power plants," in *Poc. of SIW*, 2014.

[28] S. S. Segura, J. P. Barbachano, and L. M. Palomo, "System and method for power management in a photovoltaic installation," Patent EP 2 328 259 B1, June 25, 2014.

[29] F. Blaabjerg, R. Teodorescu, M. Liserre, and A.V. Timbus, "Overview of control and grid synchronization for distributed power generation systems," *IEEE Trans. Ind. Electron.*, vol. 53, no. 5, pp. 1398–1409, Oct. 2006.

[30] R. W. Erickson and D. Maksimovic, *Fundamentals of power electronics*, 2nd ed. Norwell, MA: Kluwer, 2001.