Aalborg Universitet

AALBORG UNIVERSITY
DENMARK

Awareness and its use in Incremental Data Driven Modelling for Plug and Play Process Control

Knudsen, Torben; Bendtsen, Jan Dimon; Trangbæk, Klaus

Published in:
European Journal of Control

DOI (link to publication from Publisher):
10.3166/ejc.18.24-37

Publication date:
2012

Document Version
Early version, also known as pre-print

Link to publication from Aalborg University

Citation for published version (APA):
Knudsen, T., Bendtsen, J. D., & Trangbæk, K. (2012). Awareness and its use in Incremental Data Driven Modelling for Plug and Play Process Control. *European Journal of Control*, *18*(1), 24-37. https://doi.org/10.3166/ejc.18.24-37

General rights
Copyright and moral rights for the publications made accessible in the public portal are retained by the authors and/or other copyright owners and it is a condition of accessing publications that users recognise and abide by the legal requirements associated with these rights.

- Users may download and print one copy of any publication from the public portal for the purpose of private study or research.
- You may not further distribute the material or use it for any profit-making activity or commercial gain
- You may freely distribute the URL identifying the publication in the public portal -

Take down policy
If you believe that this document breaches copyright please contact us at vbn@aub.aau.dk providing details, and we will remove access to the work immediately and investigate your claim.

Awareness and its use in Incremental Data Driven Modelling for Plug and Play Process Control

Torben Knudsen Jan Bendtsen Klaus Trangbaek
Automation and Control,
Department of Electronic Systems,
Aalborg University,
Fredrik Bajers Vej 7,
DK-9220 Aalborg Ø, Denmark.
{tk,dimon,ktr}@es.aau.dk

October 18, 2010

Abstract

In this paper, we focus on the problem of incremental system identification for the purpose of automatic reconfiguration of control systems. We consider the particular case where a linear time-invariant system is augmented with either an extra sensor or an extra actuator and derive prediction error methods for recursively estimating the additional parameters while retaining the existing system model. Next, we propose a novel measure of the "usefulness" of new signals that appear in an existing control loop due to the addition of a new device, e.g., a sensor. This measure, which we refer to as *awareness*, indicates if there is a relation between the signal provided by the new device and the existing process, as well as what the new device is good for in terms of control performance. Finally, a simulation example illustrates the potentials of the proposed method.

Keywords: System identification; Incremental modelling; Reconfigurable systems; Adaptive control; Plug and play process control; Model validation.

1 Introduction

Often, practical control designs for complex plants are carried out in an incremental fashion; individual key outputs are controlled first, leaving less important subsystems for later tuning and/or control design. The performance of such incremental designs will typically be improved by obtaining more accurate models from data collected during actual operation. That is, the initial controller may be well suited for a nominal model, and it might stabilise the process in practical operation; however, due to unmodelled dynamics, uncertainties etc., it may not, in practice, yield satisfactory performance with the nominal configuration of sensors and actuators. One may then consider

obtaining more information about the plant, or gain more control authority over it, by adding extra sensors or actuators.

Furthermore, it is often the case that the number of potential measurement points available is far greater than the number of outputs to be controlled. As a consequence, it is often a non-trivial problem to select the optimal sets of measurements for a given purpose [1], and it may sometimes happen that a different combination of measurements turn out to be better suited for control purposes than the originally chosen one [5].

That is, the initial controller may be well suited for a nominal model, and it might stabilise the process in practical operation, but due to unmodelled dynamics, uncertainties etc., it may not, in practice, yield satisfactory performance with the given configuration of sensors and actuators. This, in itself, gives rise to a number of interesting problems: how to select additional inputs and outputs, how to estimate the additional unknown dynamics, how to verify the additional signals' usefulness, and how to include the additional signals in the existing controller.

Preferably, this should be done without having to decommission the plant, as well as without disabling and re-designing the existing control system, since it is usually very costly to do so. Imagine, for example, an existing climate control system in a livestock stable. The farmer observes increasing signs of discomfort in the animals in a corner of the stable, likely due to leakage draft. The company that delivered the control system offers to install an additional temperature transducer in the corner and re-design and tune the controller to maintain the set point temperature in the vicinity of the additional temperature sensor as well as in the rest of the stable. Although a simple temperature sensor is quite cheap to buy and install, the re-design of the control system would likely be prohibitively expensive. Thus, there would be a significant benefit to the farmer, if the system could automatically detect and utilise the new sensor.

The concept of "Plug and Play Process Control" ($\mathrm{P^3C}$), see e.g., [17], [20] and [7], is a systematic way to achieve this goal. The basic vision of $\mathrm{P^3C}$ is:

> When a new device e.g. a sensor or actuator is plugged into a functioning control system it will identify itself and the control system will automatically become aware of the new signal, determine its usefulness and exploit it in an optimal way over time.

In this paper, we aim to develop methods to a) "become aware of the new signal," i.e. determining if there is any relation between the new signal and the existing system, b) "determine its usefulness," i.e. measuring to what extent the new signal can be used for control, and finally c) to give a simple example showing how to use these methods for control purposes. Essentially,

> Awareness should measure the potential usefulness for control in general, i.e., without knowledge of the specific performance function.

Note that we do not address the optimal selection of a new device if several options are available in this paper. Moreover, the specific performance function for the system in question is not assumed to be known; the idea is to assume that only very basic information is known. Thus, we will not address the controller re-tuning either; for results in that direction, see for instance [20], [18] and [19].

We make the following general assumptions throughout the paper, which we believe are not restrictive in practice.

1. The present system is already stabilised by a controller, and a system shut-down should not be necessary.

2. The control law is known (although not necessarily the performance function it was designed according to).

3. A model for the present system is known.

4. An asynchronous event is triggered when a new device is plugged into the system; as part of issuing this event, the device identifies itself with information such as type, preferred measurement range etc.

5. Online data are available both before and after the triggering event.

6. Excitation can be used within specified limits.

7. The new device is assumed to be static. That is, it is assumed that its dynamics are sufficiently fast to be neglected compared to the dynamics of the present system.

Related problems have been treated in literature, but so far not in quite the same setting. *Incremental modelling* in the sense that an existing model of a system is incrementally improved upon via online operation, is discussed in e.g., [9], [2], and [8], but in each of these cases the system structure remains fixed. Another related, but different problem is that of fault tolerant control, see e.g., [6], [15], or [3]. In fault tolerant control, however, sensors or actuators typically disappear, get stuck or otherwise deteriorate, so the control system does not need to change itself to accommodate any new information.

The outline of the rest of the paper is as follows. Sections 2-4 presents the present model, parametrization and estimation of additional parameters. Then, in Section 5 we propose the awareness measure. This is followed by a simulation example in Section 6. Finally, a conclusion is given in Section 7.

Note that parts of the material in Sections 3 and 4.1 have already been presented in [7], but are included here for completeness.

Our notation is mostly standard. $R_{\phi\psi}(k)$ denotes the covariance between the signals ϕ and ψ, i.e., $R_{\phi\psi}(k) = \mathrm{E}(\phi(t+k)\psi(t)^T), k = 0, \pm 1, \pm 2, \ldots$. $R_\phi(k)$ is the auto-covariance of ϕ. $R_{\phi\psi}(0)$ (or $R_\phi(0)$) will often be abbreviated as simply $R_{\phi\psi}$ (resp. R_ϕ). Derivatives of vector functions $f : \mathbb{R}^n \to \mathbb{R}^m$ with respect to vector variables $x \in \mathbb{R}^n$ are written as

$$\nabla f = \frac{\partial f(x)^{\mathrm{T}}}{\partial x} = \begin{bmatrix} \frac{\partial f_1}{\partial x_1} & \cdots & \frac{\partial f_m}{\partial x_1} \\ \vdots & \ddots & \vdots \\ \frac{\partial f_1}{\partial x_n} & \cdots & \frac{\partial f_m}{\partial x_n} \end{bmatrix} \in \mathbb{R}^{n \times m}.$$

We denote time series data using capital Roman letters with a superscript denoting the final sample number, e.g.,

$$Y^t = \begin{bmatrix} y(1) \\ \vdots \\ y(t) \end{bmatrix}$$

Finally, $\mathrm{vec}(\cdot)$ denotes the operation of stacking the columns of an $n \times m$ matrix to yield a single nm-dimensional vector.

2 Present model

We consider a linear, time invariant system mapping inputs $u_p(t) \in \mathbb{R}^{n_u}$ to outputs $y_p(t) \in \mathbb{R}^{n_y}$ at sample time $t, t = 0, 1, 2, \ldots$ via the state space description

$$x(t+1) = Ax(t) + Bu_p(t) + w(t) \tag{1}$$

$$y_p(t) = Cx(t) + Du_p(t) + v(t) \tag{2}$$

where $A \in \mathbb{R}^{n \times n}$, $B \in \mathbb{R}^{n \times n_u}$, $C \in \mathbb{R}^{n_y \times n}$ and $D \in \mathbb{R}^{n_y \times n_u}$ are constant matrices. Subscript $(\cdot)_p$ denotes 'present' signals. $x \in \mathbb{R}^n$ is assumed to represent "physical" states, in the sense that the state noise $w \in \mathbb{R}^n$ only includes unmeasured inputs/disturbances, as opposed to $v \in \mathbb{R}^{n_y}$, which only includes the measurement noise. It is often reasonable to assume that the measurement noise $v(t)$ is uncorrelated with the process noise $w(t)$, i.e., $R_{wv} = 0$, where R_{wv} denotes the cross-correlation matrix between the stochastic signals w and v. w and v are assumed to be (stochastic) stationary white noise processes with covariances

$$\mathrm{Cov}\begin{bmatrix} w \\ v \end{bmatrix} = \begin{bmatrix} R_w & R_{wv} \\ R_{vw} & R_v \end{bmatrix}. \tag{3}$$

The other model version we shall consider is the following innovation model:

$$\hat{x}(t+1) = A\hat{x}(t) + Bu_p(t) + Ke_p(t) \tag{4}$$

$$\hat{y}_p(t) = C\hat{x}(t) + Du_p(t) \tag{5}$$

$$y_p(t) = \hat{y}_p(t) + e_p(t) \tag{6}$$

where $\hat{\cdot}$ denotes estimates, $e_p(t) = y_p(t) - \hat{y}_p(t)$ is the estimation error and $K \in \mathbb{R}^{n \times n_y}$ is a Kalman gain matrix. In this innovation model formulation, the state estimate $\hat{x}(t)$ is chosen as $\hat{x}(t) = \mathrm{E}(x(t)|Y_p^{t-1})$, where $\mathrm{E}(\cdot)$ denotes expectation value and $Y_p^{t-1} = \begin{bmatrix} y_p(1)^T & \ldots & y_p(t-1)^T \end{bmatrix}^T$. The output prediction error is assumed white and with known covariance

$$\mathrm{Cov}(e_p) = R_e, \quad \mathrm{E}(e_p(t)e_p(s)^T) = 0, t \neq s.$$

When the above assumptions are satisfied, we have the following basic properties. Firstly, the state prediction error $\tilde{x}(t) = x(t) - \hat{x}(t)$ is uncorrelated with previous

measurements Y_p^{t-1}, but is not a white-noise sequence. Secondly, the output prediction error $\tilde{y}_p(t) = y_p(t) - \hat{y}_p(t) = e_p(t)$ is uncorrelated with previous measurements Y_p^{t-1} and is white, i.e., $\tilde{y}_p(t), \tilde{y}_p(t-1), \ldots, \tilde{y}_p(0)$ are uncorrelated.

It is assumed that the original model is known exactly, for instance through extensive system identification, but only in the innovation form (4)–(6). Furthermore, only the output measurements y_p are considered available, not the states. The experimental conditions can be open-loop or closed-loop, as long as there is sufficient excitation. Gaussian noise distribution is not a necessary assumption in this work; however, if the noise does happen to be Gaussian, (un-)correlated implies (in-)dependent.

Note that the additional device is not part of closed-loop operation at the time of system identification. The new device will not be included in the controller before the model has been successfully updated.

3 Additional input

The problem considered in this section can be illustrated as in Figure 1. An original system with the deterministic state space realization (1)–(2) is operating subject to the input $u \in \mathbb{R}^{n_u}$. Then, at some point, a new actuator is plugged into the system, providing new actuation capabilities via the additional input $u_a \in \mathbb{R}$. As the new device is plugged into the system, it affects the plant as indicated in the figure; that is, the state vector may be affected by the new input via a gain $B_a \in \mathbb{R}^{n \times 1}$ and the system output may be affected by u_a by a gain $D_a \in \mathbb{R}^{n_y \times 1}$. Since it is assumed that we already have good knowledge of the original system, we wish to identify *only* the new parts of the system, B_a and D_a.

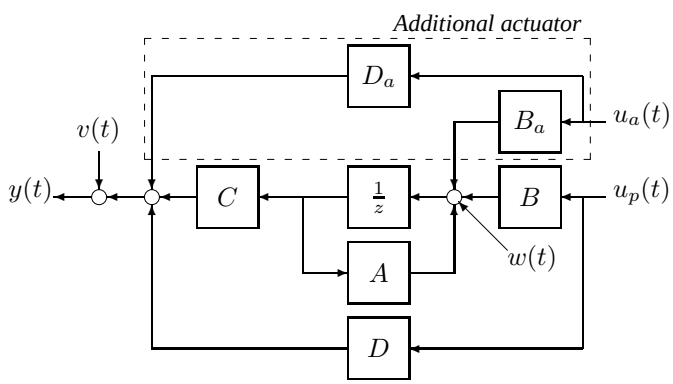

Figure 1: *Plugging in a new actuator leads to an extended state space model, where the new system parameters B_a and D_a must be identified*

The original input is not assumed to be corrupted by noise, and this is assumed for the additional input as well. This implies that the new input part simply has to be added

to an otherwise unchanged innovation model:

$$\begin{aligned}
\hat{x}(t+1) &= A\hat{x}(t) + \begin{bmatrix} B & B_a \end{bmatrix} u(t) + Ke_p(t) \\
\hat{y}(t) &= C\hat{x}(t) + \begin{bmatrix} D & D_a \end{bmatrix} u(t) \\
y(t) &= C\hat{x}(t) + \begin{bmatrix} D & D_a \end{bmatrix} u(t) + e_p(t) \\
R_e &= \mathrm{Cov}(e)
\end{aligned}$$

where $u(t) = \begin{bmatrix} u_p(t)^T & u_a(t)^T \end{bmatrix}^T$ and $y(t)$ denote the in- and output signals after the addition of the new actuator, respectively. Here we note, in particular, that K is unchanged. It is thus only necessary to estimate B_a and D_a. It is furthermore noted that the predicted output are linear in these parameters, as the Kalman predictor can be written as

$$\begin{aligned}
\hat{x}(t+1) &= (A - KC)\hat{x}(t) + Ky(t) \\
&\quad + \begin{bmatrix} B - KD & B_a - KD_a \end{bmatrix} u(t) \\
\hat{y}(t) &= C\hat{x}(t) + \begin{bmatrix} D & D_a \end{bmatrix} u(t)
\end{aligned}$$

That is, the output can be separated into a contribution from the original system and a linear combination of contributions from each of the new gains. To exploit this observation, we introduce the parameter vector

$$\theta = \begin{bmatrix} \theta_1 \\ \vdots \\ \theta_{n+p} \end{bmatrix} = \begin{bmatrix} B_a \\ D_a \end{bmatrix} \tag{7}$$

and define $\hat{y}_p(t)$ as the predicted output from the original system, i.e., assuming $B_a = 0, D_a = 0$ in Figure 1. Exploiting superposition, we let $\hat{y}_i$ denote the predicted output assuming $B = 0, D = 0$ and $\theta_i = 1, \theta_j = 0, j = 1, \ldots, n+p, j \neq i$. Then the predicted output can be written as a linear combination of these signals as follows:

$$\hat{y}(t) = \hat{y}_p(t) + \sum_{i=1}^{n+n_y} \theta_i \hat{y}_i(t).$$

Consequently, the measured output is given by

$$y(t) = \hat{y}_p(t) + \sum_{i=1}^{n+n_y} \theta_i \hat{y}_i(t) + e(t) \tag{8}$$

where $e(t)$ is the corresponding innovation. Let the prediction and measurement output samples be gathered in vectors as

$$Y^N = \begin{bmatrix} y(1) \\ \vdots \\ y(N) \end{bmatrix}, \quad Y_p^N = \begin{bmatrix} y_p(1) \\ \vdots \\ y_p(N) \end{bmatrix} \text{ and } \hat{Y}_i^N = \begin{bmatrix} \hat{y}_i(1) \\ \vdots \\ \hat{y}_i(N) \end{bmatrix}, i = 1, \ldots, n+n_y$$

where N denotes the number of samples. We now have the following results.

Lemma 1. *Consider the system (1)–(2) and assume that a correct innovation model (4)–(6) is known for the original system. Suppose an actuator with unknown parameters as described by (7) is added to the system.*

The least-squares optimal estimate of the additional parameters is then given by

$$\hat{\theta} = (\Upsilon^T \Upsilon)^{-1} \Upsilon^T Z \tag{9}$$

where

$$\Upsilon = \begin{bmatrix} \widehat{Y}_1^N & \cdots & \widehat{Y}_{n_y+n}^N \end{bmatrix} \text{ and } Z = Y^N - \widehat{Y}_p^N.$$

Proof. Gathering the entire sample set using the vector notation introduced above, (8) can be written as

$$Y^N = \widehat{Y}_p^N + \theta_1 \widehat{Y}_1^N + \cdots + \theta_{n+n_y} \hat{Y}_{n+n_y}^N + E^N$$

where $E^N = [e(1)^T, \ldots, e(N)^T]^T$ is the corresponding vector of innovation samples. This is equivalent to the multiple linear regression form

$$Z = Y^N - \hat{Y}_p^N = \Upsilon\theta + E^N$$

for which it is well known—see e.g. [10, App. II.1]—that the estimator minimizing the sum of squared prediction errors is given by (9). □

Theorem 1. *(Consistent least squares estimator for additional input) Consider the system (1)–(2) and assume that a correct innovation model (4)–(6) is known for the original system. Suppose an actuator with unknown parameters as described by (7) is added to the system. Assume furthermore that the input is persistently exciting.*

Then the LS estimator (9) is consistent in open-loop operation. Furthermore, it is consistent in closed-loop operation as well, provided there is at least one time delay from output to input.

Proof. Let $\bar{\theta}$ denote the true parameters. Using the expressions in Lemma 1 the estimator can be related to the parameters as follows.

$$\begin{aligned} \hat{\theta} &= (\Upsilon^T \Upsilon)^{-1} \Upsilon^T Z \\ &= (\Upsilon^T \Upsilon)^{-1} \Upsilon^T (\Upsilon \bar{\theta} + E^N) \\ &= \bar{\theta} + (\Upsilon^T \Upsilon)^{-1} \Upsilon^T E^N \\ &= \bar{\theta} + \left(\frac{1}{n_y N} \Upsilon^T \Upsilon \right)^{-1} \frac{1}{n_y N} \Upsilon^T E^N \end{aligned}$$

Since the processes are assumed to be stationary, we can now exploit ergodicity to find the limit value of $\hat{\theta}$ as the number of samples grows to infinity:

$$\lim_{N \to \infty} \hat{\theta} = \bar{\theta} + \lim_{N \to \infty} \left(\left(\frac{1}{n_y N} \Upsilon^T \Upsilon \right)^{-1} \left(\frac{1}{n_y N} \Upsilon^T E^N \right) \right).$$

Due to sufficient excitation, the factor $\left(\frac{1}{pN}\Upsilon^T\Upsilon\right)$ is invertible (see also [10, App. II.2]). Writing out the last term, we get

$$\frac{1}{pN}\Upsilon^T E^N = \frac{1}{pN}\begin{bmatrix} \sum_{t=1}^N \hat{y}_1(t)^T e(t) \\ \vdots \\ \sum_{t=1}^N \hat{y}_{n+n_y}(t)^T e(t) \end{bmatrix}$$

in which $\hat{y}_i(t), i = 1, \ldots, n + n_y$ is the output predictor corresponding to the i'th additional parameter at time t, which is generated from inputs and outputs up to and including time $t - 1$ plus $u(t)$ for $D \neq 0$. Since there is at least one time delay from output to input, these signals are uncorrelated with the innovation $e(t)$, even in closed-loop operation. Hence, with probability 1 we have $\frac{1}{n_y N}\Upsilon^T E^N \to 0$ and $\hat{\theta} \to \bar{\theta}$ for $N \to \infty$. □

Thus, straightforward least-squares system identification yields an asymptotically unbiased estimate of the new actuator parameters, as long as no new dynamics is included.

4 Additional output

When adding an extra sensor without dynamics, the situation becomes as illustrated in Figure 2.

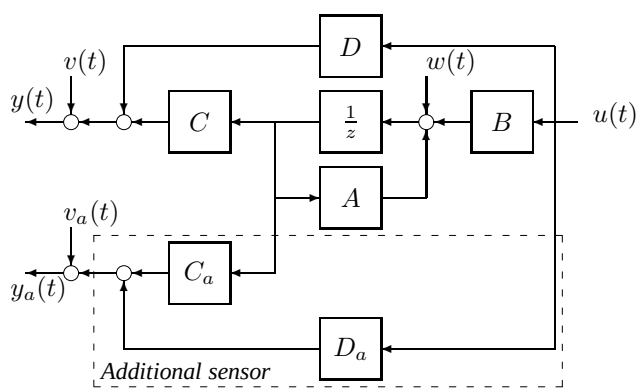

Figure 2: *Plugging in a new sensor yields a new output. The additional parameters C_a and D_a must be identified*

In contrast to the additional input case above, the additional output is corrupted with measurement noise $v_a \in \mathbb{R}$. The necessary augmentations to the model structure thus become

$$x(t+1) \quad = \quad Ax(t) + Bu(t) + w(t) \tag{10}$$

$$
\begin{aligned}
y(t) &= \begin{bmatrix} C \\ C_a \end{bmatrix} x(t) + \begin{bmatrix} D \\ D_a \end{bmatrix} u(t) + \begin{bmatrix} v(t) \\ v_a(t) \end{bmatrix} && (11) \\
\operatorname{Cov} \begin{bmatrix} w \\ v \\ v_a \end{bmatrix} &= \begin{bmatrix} R_w & R_{wv} & R_{wv_a} \\ R_{vw} & R_v & R_{vv_a} \\ R_{v_a w} & R_{v_a v} & R_{v_a} \end{bmatrix}. && (12)
\end{aligned}
$$

and, again, $u(t)$ and $y(t) = \begin{bmatrix} y_p(t)^T & y_a(t)^T \end{bmatrix}^T$ denote the in- and output signals after the addition of the new sensor, respectively. Note the important detail that $y_a(t)$ is a function of the *physical* state $x(t)$, not the predicted state $\hat{x}(t)$. Here, it will be assumed that the measurement noise for the additional output v_a is uncorrelated with the other noise sources i.e. $R_{a\bullet} = R_{\bullet a}^T = 0$.

4.1 Least Squares Estimates of the Deterministic Part

If the full, physical state $x(t)$ is measured, all parameters including the covariances (12) can be estimated using least squares methods based on the model equations (10) and (11) above. However, as $x(t)$ is not measured in most cases, an estimate must be used instead. In the following, we shall use the prediction $\hat{x}$ from the innovation model (4)–(6).

Introducing the state prediction error $\tilde{x}(t) = x(t) - \hat{x}(t)$ allows us to rewrite the output equation for $y_a(t)$ as

$$
\begin{aligned}
y_a(t) &= C_a x(t) + D_a u(t) + v_a(t) \\
&= C_a \hat{x}(t) + D_a u(t) + C_a(x(t) - \hat{x}(t)) + v_a(t) \\
&= C_a \hat{x}(t) + D_a u(t) + C_a \tilde{x}(t) + v_a(t). && (13)
\end{aligned}
$$

If we further introduce the regression and parameter vectors

$$
\phi(t) = \begin{bmatrix} \hat{x}(t) \\ u(t) \end{bmatrix} \text{ and } \theta = \begin{bmatrix} C_a & D_a \end{bmatrix}^T \tag{14}
$$

we are able to state the following results.

Lemma 2. *Consider the system (1)–(2) and assume that a correct innovation model (4)–(6) is known for the original system. Suppose a sensor with unknown parameters as described by (14) is added to the system.*

Then a least squares estimator for the deterministic part is given by

$$
\hat{\theta} = \left(\sum_{t=1}^{N} \phi(t)\phi(t)^T \right)^{-1} \sum_{t=1}^{N} \phi(t) y_a(t). \tag{15}
$$

Proof. Rewriting (13) yields

$$
y_a(t) = \theta^T \phi(t) + C_a \tilde{x}(t) + v_a(t)
$$

and if we see the term $C_a \tilde{x}(t) + v_a(t)$ as a regression error, it is clear that the optimal parameter estimate is obtained by solving the optimization problem

$$
\min_{\theta} \sum_{t=1}^{N} (y_a(t) - \theta^T \phi(t))^2
$$

which has the solution (15). □

Remark 2.1. *Note that $\theta^T\phi(t)$ does not use y_a and is thus not an optimal predictor. Hence, (15) is not a prediction error method-based estimator, and accordingly the residuals cannot be expected to be white.*

Theorem 2. *(Consistent least squares estimator for additional output, deterministic part) Consider the system (1)–(2) and assume that a correct innovation model (4)–(6) is known for the original system. Suppose a sensor with unknown parameters as described by (14) is added to the system. Assume furthermore that the input is persistently exciting.*

Then the least squares estimator (15) is consistent in open-loop operation. Furthermore, it is consistent in closed-loop operation as well, provided there is at least one time delay from output to input.

Proof. This proof builds on the same ideas as the proof for Theorem 1. Let $\bar{\theta}$ denote the true parameters, and introduce the residual $r(t) = y_a(t) - \bar{\theta}^T\phi(t)$. Then we have

$$\begin{aligned}
\hat{\theta} &= \left(\sum_{t=1}^{N}\phi(t)\phi(t)^T\right)^{-1}\sum_{t=1}^{N}\phi(t)y_a(t) \\
&= \left(\sum_{t=1}^{N}\phi(t)\phi(t)^T\right)^{-1}\sum_{t=1}^{N}\phi(t)(\phi(t)^T\theta + r(t)) \\
&= \bar{\theta} + \left(\frac{1}{N}\sum_{t=1}^{N}\phi(t)\phi(t)^T\right)^{-1}\frac{1}{N}\sum_{t=1}^{N}\phi(t)r(t).
\end{aligned}$$

Now letting N grow, we see that

$$\lim_{N\to\infty}\hat{\theta} = \bar{\theta} + \mathrm{E}\left(\left[\phi(t)\phi(t)^T\right]^{-1}\right)\mathrm{E}\left(\phi(t)r(t)\right)$$

As in the proof of Theorem 1, the first factor is invertible due to the assumption of persistent excitation. Further, since $r(t) = C_a\tilde{x}(t) + v_a(t)$ we see that the last term can be written as

$$\mathrm{E}\left(\phi(t)^T r(t)\right) = \begin{bmatrix}\mathrm{E}\left(\hat{x}(t)\left(C_a\tilde{x}(t) + v_a(t)\right)\right) \\ \mathrm{E}\left(u(t)\left(C_a\tilde{x}(t) + v_a(t)\right)\right)\end{bmatrix}.$$

Now, as the additional output noise $v_a(t)$ is assumed to be uncorrelated with all other signals in the system, including $\hat{x}(t)$ and $u(t)$, and $\mathrm{E}(v_a(t)) = 0$, the terms $\mathrm{E}(\hat{x}(t)v_a(t))$ and $\mathrm{E}(u(t)v_a(t))$ must be zero.

Next, since $\hat{x}(t)$ is an optimal prediction, it is uncorrelated with $\tilde{x}(t)$ and $\mathrm{E}(\tilde{x}(t)) = 0$. Finally, $\tilde{x}(t)$ is uncorrelated with $u(t)$ in both open-loop and closed-loop operation. $u(t)$ is then a function of $u(\tau)$ and $y(\tau), \tau = t-1, t-2, \ldots$, with which $\tilde{x}(t)$ is also uncorrelated. Consequently we have $\mathrm{E}\left(\phi(t)^T r(t)\right) = 0$, and the estimator is consistent. □

4.2 Prediction error-based estimates of the stochastic part

Unlike the case of an additional input, an additional output changes not only a single row or column in the parameter matrices in the innovation model (4)–(6). This means that K and R_e must be estimated anew. As the present model is assumed known and the deterministic part can be consistently estimated, the starting point is to assume the parameter matrices $A, B, \bar{C}$ and $\bar{D}$ in the augmented deterministic model (i.e., including the additional output) are known, based on the estimation carried out in the previous subsection. That is, we consider the innovation model

$$\begin{aligned} \hat{x}(t+1) &= A\hat{x}(t) + Bu(t) + \bar{K}e(t) \\ y(t) &= \bar{C}\hat{x}(t) + \bar{D}u(t) + e(t) \\ \mathrm{Cov}(e) &= R_e \end{aligned}$$

where it should be noted that $y(t)$ contains both the original output and the additional output $y_a(t)$.

We choose the prediction error method to find $\bar{K}$, and note that the setup is such that, assuming the noise is Gaussian, the problem becomes almost equivalent to a Maximum Likelihood method. We will briefly present the parameter estimation method as it applies to our setup in the following; see also [10, sec 10.3 p 331].

The prediction error method can be formulated as follows. Let $e(t,\theta) = y(t) - \hat{y}(t,\theta)$ be the output prediction error at sample t computed from a model with parameters $\theta \in \Theta$. We define

$$l(\theta) = \sum_{t=1}^{N} e(t,\theta)^T \Lambda^{-1} e(t,\theta) \tag{16}$$

where Λ is a symmetric positive definite matrix of appropriate dimensions, and solve the optimization problem

$$\hat{\theta}^* = \arg\min_{\theta\in\Theta} l(\theta) \tag{17}$$

If l is taken as the negative likelihood and θ includes all unknown parameters, this is indeed the standard maximum likelihood method. Here, however, we are only interested in estimating the parameters in $\bar{K}$. We perform the minimization twice, first with $\Lambda = I$, yielding a first estimate $\hat{\theta}^1$, from which we compute an autocorrelation estimate

$$\widehat{R}_e = \frac{1}{N}\sum_{t=1}^{N} e(t,\hat{\theta}^1)e(t,\hat{\theta}^1)^T \tag{18}$$

and then we perform the optimization again with $\Lambda = \widehat{R}_e$ from the first minimization. Assuming that $\widehat{R}_e \approx R_e$, this is similar to the maximum likelihood method for $\bar{K}$ if the process and measurement noise are Gaussian.

Next, we derive expressions for the first and second derivative of l wrt. θ in order to be able solve the optimization problems efficiently. Let $\theta = \mathrm{vec}(K)$; differentiating

wrt. θ we obtain

$$\nabla l(\theta) = \frac{\partial l(\theta)}{\partial \theta} = 2\sum_{t=1}^{N} \frac{\partial e(t,\theta)^T}{\partial \theta} \Lambda^{-1} e(t,\theta)$$

Next, differentiating with respect to each element of θ, we see that

$$\frac{\partial^2 l(\theta)}{\partial \theta_i \, \partial \theta_j} = 2\sum_{t=1}^{N} \frac{\partial^2 e(t,\theta)^T}{\partial \theta_i \, \partial \theta_j} \Lambda^{-1} e(t,\theta) + 2\sum_{t=1}^{N} \frac{\partial e(t,\theta)^T}{\partial \theta_i} \Lambda^{-1} \frac{\partial e(t,\theta)}{\partial \theta_j}$$

Here, it is noted that $\sum_{t=1}^{N} \frac{\partial^2 e(t,\theta)^T}{\partial \theta_i \, \partial \theta_j}$ is a function of $y(t-1), y(t-2), \ldots, y(0)$ and $y(t-1), u(t-2), \ldots, u(0)$. Hence, as $\theta \to \bar{\theta}$, the first term will tend to zero as e will be independent of the observations on which it is based (see also [10, (10.45)]). Thus, a good approximation for the second derivative is

$$\nabla^2 l(\theta) = \frac{\partial^2 l(\theta)}{\partial \theta \, \partial \theta^{\mathrm{T}}} \approx 2\sum_{t=1}^{N} \frac{\partial e(t,\theta)^{\mathrm{T}}}{\partial \theta} \Lambda^{-1} \frac{\partial e(t,\theta)}{\partial \theta^{\mathrm{T}}}$$

Finally, the gradient of e is given by the gradient of the one-step predictor:

$$e(t,\theta) = y(t) - \hat{y}(t,\theta) \quad \Rightarrow \quad \frac{\partial e(t,\theta)}{\partial \theta} = -\frac{\partial \hat{y}(t,\theta)}{\partial \theta}$$

which in turn can be computed from the Kalman filter equation. For a fixed $\bar{K}$ the optimal one step predictor $\hat{y}(t,\theta)$ becomes

$$\hat{x}(t+1,\theta) = \bar{A}\hat{x}(t,\theta) + \bar{B}u(t) + \bar{K}(y(t) - \hat{y}(t,\theta)) \tag{19}$$

$$\hat{y}(t,\theta) = \bar{C}\hat{x}(t,\theta) + \bar{D}u(t) \tag{20}$$

and differentiating wrt. θ yields the following recursive expression for the desired gradient:

$$\frac{\partial \hat{x}(t+1,\theta)}{\partial \theta^{\mathrm{T}}} = \bar{A}\frac{\partial \hat{x}(t,\theta)}{\partial \theta^{\mathrm{T}}} - \bar{K}\frac{\partial \hat{y}(t,\theta)}{\partial \theta^{\mathrm{T}}} + \frac{\partial \bar{K}}{\partial \theta^{\mathrm{T}}} e(t,\theta) \tag{21}$$

$$\frac{\partial \hat{y}(t,\theta)}{\partial \theta^{\mathrm{T}}} = \bar{C}\frac{\partial \hat{x}(t,\theta)}{\partial \theta^{\mathrm{T}}} \tag{22}$$

Here, since $\theta = \mathrm{vec}(K)$, we see that

$$\begin{aligned} \frac{\partial \bar{K}}{\partial \theta^{\mathrm{T}}} e(t,\theta) &= \begin{bmatrix} e(t,\theta)_1 I_n & e(t,\theta)_2 I_n & \cdots & e(t,\theta)_p I_n \end{bmatrix} \\ &= e(t,\theta)^{\mathrm{T}} \otimes I_n \end{aligned} \tag{23}$$

where I_n is the identity matrix of size n and $\otimes$ denotes the Kronecker product.

The stability of (21) is the same as for the Kalman filter, i.e., it is stable if the eigenvalues of $\bar{A} - \bar{K}\bar{C}$ are within the unit circle, which can always be ensured if the system is observable. See also [10, sec 10.3 p 331].

For the iterative minimization the Levenberg-Marquardt [12, 16] method (24) is used.

$$\hat{\theta}^k = \hat{\theta}^{k-1} - \left(\delta I + \nabla^2 l(\hat{\theta}^{k-1})\right)^{-1} \nabla l(\hat{\theta}^{k-1}) \tag{24}$$

Convergence of this algorithm is basically obtained by reducing δ for each step where l decreases and increasing δ if l does not decrease.

4.3 Recursive parameter estimation

The awareness measure in the following section is most useful for control applications if it can be updated at each time sample. This in turn calls for recursive parameter estimation, which is therefore briefly presented in this section. Since recursive estimation is not in focus in this work, the discussion is kept brief.

We use the recursive prediction error method [11] to estimate $\hat{K}$. Let $\Psi \in \mathbb{R}^{n_\theta \times p}$ denote the gradient of $\hat{y}$ and let $0 < \lambda \leq 1$ be a forgetting factor.

$$\Psi(t) = \frac{\partial \hat{y}(t,\theta)}{\partial \theta}^{\mathrm{T}} \tag{25}$$

$$\hat{\Lambda}(t) = \begin{cases} \lambda \hat{\Lambda}(t-1) + (1-\lambda) e(t) e(t)^{\mathrm{T}} & \text{if } \lambda < 1 \\ \left(1 - \frac{1}{t}\right) \hat{\Lambda}(t-1) + \frac{1}{t} e(t) e(t)^{\mathrm{T}} & \text{if } \lambda = 1 \end{cases} \tag{26}$$

$$R(t) = \lambda R(t-1) + \Psi(t) \hat{\Lambda}(t)^{-1} \Psi(t)^{\mathrm{T}} \tag{27}$$

$$\hat{\theta}(t) = \hat{\theta}(t-1) + R(t)^{-1} \Psi(t) \hat{\Lambda}(t)^{-1} e(t) \tag{28}$$

The dependence of Ψ, e, $\hat{\Lambda}$ and R on $\hat{\theta}$ are left out in the above expressions for simplicity. e and Ψ are computed using (19)–(20) and (21)–(22).

Note that stability problems can occasionally occur in these recursions. This issue is outside the scope of this paper, however, and will not be discussed further.

Similar recursive formulations can be given for the estimator of the deterministic part of an additional sensor or actuator. In this case the recursions are simpler and do not incur any stability problems.

In case of an additional sensor, recursive estimation of both C_a, D_a and K are needed. The recursive estimation of K assumes a known deterministic model including C_a and D_a. As C_a and D_a are estimated recursively, the estimates at the given sample t, $\hat{C}_a(t)$ and $\hat{D}_a(t)$, are simply used in the recursive estimator for $\hat{K}(t)$, i.e. the deterministic and stochastic recursive parameter estimators are merged. For $\lambda = 1$ this does not spoil the convergence as the recursive estimate for C_a, D_a converges independently of the additional estimated K-parameters which then eventually makes the estimate of K converge as well.

5 Awareness measures

In this section we introduce three different measures, which indicate the "correlation" (in some specific sense, which will be explained below) between a new actuator and

the present sensors or between a new sensor and the present actuators. If there is a high degree of correlation, the new device can probably be exploited by the controller whereas low correlation means that it is probably difficult to utilize the new device in the existing control loop. Correlation can be measured by traditional *model free methods* or by the *relative reduction in modelling error*. We first recall some basic notions from correlation analysis.

5.1 Preliminaries

Let $\mu_\phi = \mathrm{E}(\phi)$, $\mu_\psi = \mathrm{E}(\psi)$ and $\sigma_\phi = \sqrt{\mathrm{E}[(\phi-\mu_\phi)^2]}$, $\sigma_\psi = \sqrt{\mathrm{E}[(\psi-\mu_\psi)^2]}$ denote the expectation value and standard deviation of two stochastic variable $\phi, \psi \in \mathbb{R}$, respectively.

The *linear correlation* between these two stochastic variables is defined as

$$\rho_{\phi\psi} = \frac{\mathrm{E}[(\phi-\mu_\phi)(\psi-\mu_\psi)]}{\sigma_\phi\sigma_\psi}$$

which gives the following natural expression for a model free estimator:

$$\hat{\rho}_{\phi\psi} = \frac{\frac{1}{N}\sum_{i=1}^{N}(\phi_i-\hat{\mu}_\phi)(\psi_i-\hat{\mu}_\psi)}{\hat{\sigma}_\phi\hat{\sigma}_\psi} \tag{29}$$

where N denotes the number of samples and

$$\begin{aligned}
\hat{\mu}_\phi &= \frac{1}{N}\sum_{i=1}^{N}\phi_i, \quad \hat{\sigma}_\phi = \sqrt{\frac{1}{N}\sum_{i=1}^{N}(\phi_i-\hat{\mu}_\phi)^2} \\
\hat{\mu}_\psi &= \frac{1}{N}\sum_{i=1}^{N}\psi_i, \quad \hat{\sigma}_\psi = \sqrt{\frac{1}{N}\sum_{i=1}^{N}(\psi_i-\hat{\mu}_\psi)^2}
\end{aligned}$$

However, a model-based alternative to the model-free correlation estimator (29) is more appropriate in this application. The model-based estimator derived is based on the fact that the *relative reduction in variance* obtained from using a univariate linear regression model equals the square of the error correlation [14, sec. 7.3]. Let $\psi \in \mathbb{R}$ and and $\phi \in \mathbb{R}^m$ denote a stochastic variable and a set of regression variables, respectively. A linear projection of ϕ onto ψ is given as

$$\check{\psi}(\theta,\phi) = \theta^T\phi \tag{30}$$

where $\theta = \begin{bmatrix}\theta_1 & \dots & \theta_m\end{bmatrix}^T$ is a parameter vector. As usual, θ^* denotes the least-squares optimal parameters, i.e.,

$$\theta^* = \arg\min_\theta \mathrm{E}[(\psi-\check{\psi}(\theta,\phi))^2]$$

Restricting one of the elements in the regressor to a fixed value, e.g., , e.g., $\phi_1 = 1$, allows us to incorporate the mean value of ψ in the linear regression; that is, $\check{\psi}(\theta^*,1)$ becomes the projection on 1 and thus $\check{\psi}(\theta^*,1) = \theta^* = \mu_\psi$.

For $m = 2$, i.e., $\phi = \begin{bmatrix} 1 & \phi_2 \end{bmatrix}^T$, the linear correlation can be computed as

$$\rho^2_{\phi\psi} = \frac{\mathrm{E}(\psi - \mu_\psi)^2 - \mathrm{E}(\psi - \check{\psi}(\theta^*, \phi))^2}{\mathrm{E}(\psi - \mu_\psi)^2} \tag{31}$$

while for $m \geq 3$, (31) becomes the correlation between a scalar ψ and the best linear combination of regressors $\begin{bmatrix} 1 & \phi_2 & \dots & \phi_m \end{bmatrix}^T$. This is also known as the multiple squared correlation [21, sec. 12.6]. Note that $\rho^2_{\phi\psi} \in [0\ ,\ 1]$.

In practice, in order to obtain an estimate of the relative reduction in modelling error, we first compute a parameter estimate

$$\hat{\theta} = \left(\sum_{i=1}^{N} \phi_i \phi_i^{\mathrm{T}} \right)^{-1} \left(\sum_{i=1}^{N} \phi_i \psi_i \right) \tag{32}$$

and then replace all the mean square errors in (31) by their corresponding sample average square errors:

$$\hat{\rho}^2_{\phi\psi} = \frac{\frac{1}{N}\sum_{i=1}^{n}(\psi_i - \mu_\psi)^2 - \frac{1}{N}\sum_{i=1}^{N}(\psi_i - \check{\psi}(\hat{\theta}, \phi_i))^2}{\frac{1}{N}\sum_{i=1}^{N}(\psi - \mu_\psi)^2} \quad . \tag{33}$$

Another useful measure is the *partial correlation*. Let ϕ be separated into its first $m - 1$ components and then the last component as

$$\phi = \begin{bmatrix} \phi_1 \\ \vdots \\ \phi_{m-1} \\ \phi_m \end{bmatrix} = \begin{bmatrix} \varphi \\ \phi_m \end{bmatrix}$$

The partial correlation between ϕ_m and ψ given φ is then defined as

$$\rho_{\phi_m\psi|\varphi} = \frac{\mathrm{E}[(\phi_m - \mathrm{E}(\phi_m|\varphi))(\psi - \mathrm{E}(\psi|\varphi))|\varphi]}{\sqrt{\mathrm{Var}(\phi_m|\varphi)\mathrm{Var}(\psi|\varphi)}} \tag{34}$$

Using similar calculations as above, this partial correlation can also be expressed by relative reduction in modelling errors. Letting θ^*_φ and θ^*_ϕ denote the optimal parameter estimates corresponding to φ and ϕ, respectively, i.e., the estimates corresponding to using only $m - 1$ and m regressors, respectively, we obtain the following expression:

$$\rho^2_{\phi_m\psi|\varphi} = \frac{\mathrm{E}(\psi - \check{\psi}(\theta^*_\varphi, \varphi))^2 - \mathrm{E}(\psi - \check{\psi}(\theta^*_\phi, \phi))^2}{\mathrm{E}(\psi - \check{\psi}(\theta^*_\varphi, \varphi))^2} \tag{35}$$

The corresponding estimate for the partial correlation based on (35) is similar to (33).

However, one should be aware that non-linear dependencies in a data set cannot necessarily be seen in linear correlation. If e.g. $\phi \in N(0, \sigma^2)$ and $\psi = \phi^2$ then ψ is determined by ϕ, but $\rho_{\phi\psi} = 0$. Such non-linear dependence can be taken into account by using a *variance reduction correlation* measure and changing the model $\check{\psi}(\theta, \phi)$

to be nonlinear in ϕ. One may choose various non-linear functions to represent the dependencies, e.g. polynomials; various smoothing techniques can also be considered [4].

Furthermore, if ϕ and ψ are two stochastic processes then it may happen that $\rho_{\phi\psi} = 0$ even though one signal is given as a function of the other, e.g. if $\phi(t)$ is white noise and $\psi(t) = \phi(t-1)$. To capture this type of correlation, one should use the cross correlation function $C_{\phi\psi}(t,s) = \rho_{\phi(t)\psi(s)}$ instead, as it covers all lags between ϕ and ψ. For non-linear time series analysis [13] uses auto correlation functions, where the variance reduction measure is used with smoothing models. A similar technique for calculation of cross correlation functions is suggested as well. It should be noted, however, that the pre-whitening method, which is often used to remove "false" correlation due to similar spectra in two signals, cannot be used without modification for non-linear systems.

Finally, yet another way to measure non-linear correlation in stochastic systems would be to use the variance reduction techniques and expand the model class used for $\check{\psi}$ from non-linear static models to non-linear dynamic models; in this case, it would not be necessary to calculate the cross correlation function, since the dynamics would already be included in the model.

5.2 Awareness measures

We now apply the above notions to the plug-and-play control setting.

Using the time series notation introduced earlier, we can consider various different model errors; for example,

$$\tilde{y}_a(t|U_p^{t-1}, Y_p^{t-1}) = y_a(t) - \hat{y}_a(t|U_p^{t-1}, Y_p^{t-1}) \tag{36}$$

where $\hat{y}_a(t|U_p^{t-1}, Y_p^{t-1})$ is the best prediction of the additional output $y_a(t)$ at time t given all present inputs $u_p(t)$ and outputs $y_p(t)$ from the start and up to and including time $t-1$.

The model/prediction error (36) originates from the above discussion on how to define and measure awareness in a "correlation-like" fashion. However, the error (36) also has a very relevant interpretation in terms of control.

Assume that a reference for $y_a(t+1)$ is known at time t; then it is, in principle, possible to solve the equation

$$\hat{y}_a(t+1|U_p^t, Y_p^t) = y_{a,r}(t+1)$$

for $u_p(t)$ as a function of u_p up to sample $t-1$, y_p up to sample t and $y_{a,r}(t+1)$ to yield a kind of 'fictitious' minimal variance feedback controller. The smallest reference tracking error that can be obtained using the *given* variables u_p and y_p thus becomes

$$\begin{aligned} y_a(t+1) - y_{a,r}(t+1) &= y_a(t+1) - \hat{y}_a(t+1|U_p^t, Y_p^t) \\ &= \tilde{y}_a(t+1|U_p^t, Y_p^t). \end{aligned}$$

Based on the above discussion, we propose the following three *awareness measures*:

$$\rho^2_{U_pY_pY_a,y_a} = \frac{\mathrm{E}[y_a(t) - \mathrm{E}(y_a(t))]^2 - \mathrm{E}[y_a(t) - \hat{y}_a(t|U_p^{t-1}, Y_p^{t-1}, Y_a^{t-1})]^2}{\mathrm{E}[y_a(t) - \mathrm{E}(y_a(t))]^2} \tag{37}$$

$$\rho^2_{U_p,y_a} = \frac{\mathrm{E}[y_a(t)-\mathrm{E}(y_a(t))]^2 - \mathrm{E}[y_a(t)-\hat{y}_a(t|U_p^{t-1})]^2}{\mathrm{E}[y_a(t)-\mathrm{E}(y_a(t))]^2} \tag{38}$$

$$\rho^2_{U_a y_p|U_p Y_p} = \frac{\mathrm{E}[y_p(t)-\hat{y}_p(t|U_p^{t-1},Y_p^{t-1})]^2 - \mathrm{E}[y_p(t)-\hat{y}_p(t|U_p^{t-1},Y_p^{t-1},U_a^{t-1})]^2}{\mathrm{E}[y_p(t)-\hat{y}_p(t|U_p,Y_p)]^2} \tag{39}$$

Note that, as stated, the above *theoretical* awareness measures are based on models, not data. Like for correlations, the squared values ρ^2 will be between 0 and 1. A value close to 0 means that the new sensor or actuator represents little extra value to the closed-loop control, while a value close to 1 means that the sensor yields significant extra information, or the actuator can improve the disturbance rejection capabilities of the closed loop. Some specific remarks are in order:

1. Firstly, (37) measures how well the additional sensor can be controlled by the present actuator in closed loop, provided it is controllable. Note that a large value of this awareness may occur if y_a cannot be controlled independently of y_p.

2. The awareness (38) measures how well the additional sensor can be controlled by the present actuator in open loop.

3. If the additional sensor is not controllable by the existing actuator, a large value of (37) can only occur if there is a strong auto correlation in y_a. However in that case the second awareness measure (38) will be close to zero.

4. The awareness (39) measures how much the additional actuator can *add* to the control of the present sensor in closed loop.

To use these measures the various versions of the function $\hat{y}(t|X)$ must be found. In general, the optimal estimate is $\hat{y}(t|X) = \mathrm{E}(y(t)|X)$, which is easy to find for linear systems, as it is closely connected to parameter estimation. For non-linear models it is normally necessary to use an approximation.

In practice, to produce an estimate it seems best to simply substitute the mean squared errors with average squared errors. These average squared errors should be generated from the present model and the new model including the new device after estimating the new parameters. Note that when a model including the new device is just starting to adapt, it may happen that the awareness measure estimates become negative; this can generally be ignored, since it is merely an effect of the model fit being poor.

An additional device can have low awareness of the above type because of low control potentials even though it has a statistically significant model improvement. To detect this situation a statistical test can be used; for instance, an appropriate measure is the p-value p_f in an F-test [10, p. 509] with the hypothesis that all additional parameters equal zero. The necessary calculations can be based on the results already developed in this work.

Finally, we note that, to obtain identifiability, some excitation is always necessary. For an additional input the independent excitation can be applied directly to the input. For an additional sensor, independent external excitation may be used, or dedicated closed-loop identification methods may be employed.

6 Simulation example

In this section, we show an example that illustrates the effect of introducing an additional output measurement. We consider the system

$$\begin{aligned}\begin{bmatrix}x_1(t+1)\\x_2(t+1)\end{bmatrix} &= \begin{bmatrix}0.9048 & -0.0090\\0.0090 & 0.9048\end{bmatrix}\begin{bmatrix}x_1(t)\\x_2(t)\end{bmatrix} + \begin{bmatrix}0.0952 & 0.0947\\0.00047 & 0.0956\end{bmatrix}u_p(t) + \begin{bmatrix}w_1(t)\\w_2(t)\end{bmatrix} \quad (40)\\ y_p(t) &= \begin{bmatrix}1 & 0\end{bmatrix}\begin{bmatrix}x_1(t)\\x_2(t)\end{bmatrix} + \begin{bmatrix}0 & 0.1\end{bmatrix}u_p(t) + v(t) \quad (41)\end{aligned}$$

with noise correlations

$$R_w = \begin{bmatrix}0.0100 & 0.0050\\0.0050 & 0.0100\end{bmatrix}, \quad R_v = 0.01, \quad R_{wv} = \begin{bmatrix}0\\0\end{bmatrix} \quad (42)$$

The corresponding innovation form, with given Kalman gain and innovation covariance, can be calculated using standard methods; we obtain

$$K_p = \begin{bmatrix}0.5381\\0.2597\end{bmatrix}, \quad R_{e_p} = 0.0248 \quad (43)$$

The system (40)–(42) above is denoted the *present* system. The deterministic part (40)–(41) and the stochastic part in innovation form (43) is considered known.

Then, using the state estimate provided by the innovation model, an LQ controller is designed. For illustration purposes, we designed a quite fast controller that aims to minimize both states, although the second state is fairly hard to observe. The control law was chosen as $u(t) = -F_o\hat{x}(t)$ where

$$\begin{aligned}F_o &= \min_F \lim_{N\to\infty} \sum_{t=1}^{N} x(t)^T Q_x x(t) + u(t)^T Q_u u(t)\\ Q_x &= I, \quad Q_u = 0.05I\end{aligned}$$

This yielded the control gains

$$F_o = \begin{bmatrix}2.3953 & -1.2122\\1.2138 & 2.4299\end{bmatrix}$$

The system (40)–(41) has deliberately been constructed such that the second state is difficult to observe; the condition number for the observability matrix is 201. However, this improves to 2.62 when introducing a new sensor into the system providing access to an *additional* output

$$\begin{aligned}y_a(t) &= C_a x(t) + D_a u_p(t) + v_a(t)\\ &= \begin{bmatrix}1 & 1\end{bmatrix}x(t) + \begin{bmatrix}0.1 & 0.1\end{bmatrix}u_p(t) + v_a(t)\end{aligned}$$

as the second state is now included directly in the output. The noise covariance of the new sensor are

$$R_a = 0.1, \quad R_{a\bullet} = R_{\bullet a} = 0$$

The following simulation experiment illustrates the different phases involved in a typical plug-and-play scenario. Plots of signals versus time are shown in Figure 3. During the first 500 samples, the system operates with the controller designed above and only one measurement, y_p. Then, at sample 500, the additional sensor is connected to the system and external excitation added. This situation persists until sample 1500, during which samples are gathered for recursive estimation of the new parameters and the awareness measures. The external excitation and its effects can clearly be seen in Figure 3.

At sample 1500 the estimated parameters related to the additional output is used to update the Kalman filter. The new additional sensor output is added to the Kalman filter, and the external excitation is removed.

For the rest of the simulation, the estimator uses both y_p and y_a, and the control is improved even though the control gains remain unchanged; as can be seen from Figure 3, the variation of the second state is clearly reduced for the last 500 samples compared to the first 500 samples.

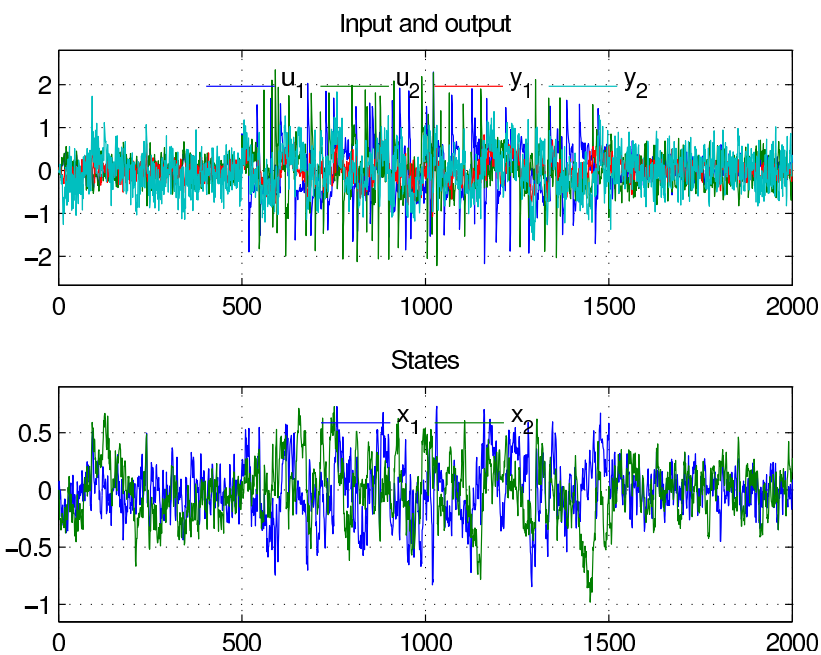

Figure 3: Input, states and output for the simulation example.

Figure 4 illustrates the progress of the recursive parameter estimation and awareness measure calculation. At sample 500, the variables are initialized. As can be seen from the figure, all the new parameters are initialized at zero, whereas the existing two K-parameters are initialized at their present values. The initial value of R is chosen small. In this example, there are no time varying parameters, so we choose $\lambda = 1$. As there is no external excitation from sample 1500, the model will not improve from this

time, and the calculations can be stopped. Note that the parameters do not seem to have converged completely at sample 1500.

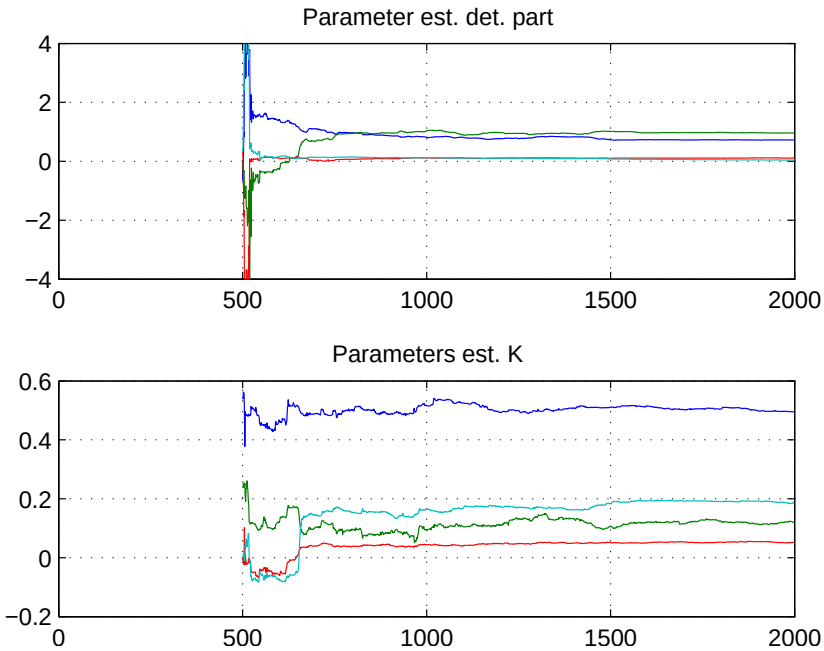

Figure 4: Recursive parameter estimates initialized at time 500.

Before discussing the awareness measures, recall that it has been a deliberately choice in this paper to use rather generic awareness measures, as opposed to measures that are specific to a given control design and performance function. This means that it is not always entirely straightforward to use the awareness measures; rather, they must be interpreted in a given setting.

According to figure 5, the p_f-test shows a statistically significant relation between the new measurement and the present model after less than 100 samples. The correlation-based awareness related to closed-loop control of the additional output (37) settles around a value 0.55 approaching time 1500, which means that the present input can control the new output as well as the linear combination of states it represents. The awareness related to open-loop control of the new output, (38), settles around 0.3 approaching time 1500 which indicates that also open loop control of the new output is possible. This suggests that the positive value of the closed-loop awareness measure (37) does not entirely come from autocorrelation in the new output, rather some of it stems from a connection to the system input.

Note that after the external excitation ends the parameters are slowly drifting; in particular, the awareness related to control of the new output is decreasing, which can be expected as the model cannot improve without excitation.

As already mentioned, Figure 3 indicates that the tested methods improve the con-

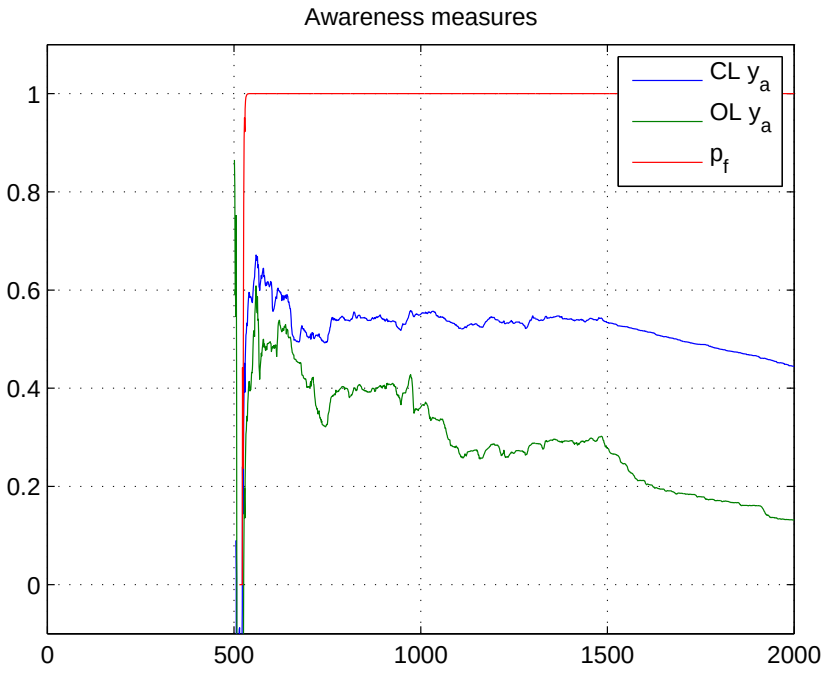

Figure 5: Awareness measure initialized at time 500.

Description	Present obs.	Present obs. with excit.	Updated obs.	Updated/ Present
Sample range	0–500	500–1500	1500–2000	
J_u	0.0042	0.0391	0.0071	1.6949
J_x	0.0849	0.1788	0.0511	0.6012
J	0.0891	0.2178	0.0582	0.6526

Table 1: Comparison of control performance between the three simulated intervals.

trol performance. To verify this, various control related measures are listed in table 1. They are all calculated from the time series shown in Figure 3. The first three columns with numbers are for the present controller in closed-loop, with external excitation and with the updated observer, respectively. The column furthest to the right is the performance of the controller with updated observer relative to the present controller. The first two rows show

$$\begin{aligned} J_u &= \frac{1}{N}\sum_{t=1}^{N} u(t)^{\mathrm{T}} Q_u u(t) \\ &= 0.05\frac{1}{N}\sum_{t=1}^{N} u_1(t)^2 + u_2(t)^2 \end{aligned}$$

and

$$\begin{aligned} J_x &= \frac{1}{N}\sum_{t=1}^{N} x(t)^{\mathrm{T}} Q_x x(t) \\ &= \frac{1}{N}\sum_{t=1}^{N} x_1(t)^2 + x_2(t)^2 \end{aligned}$$

respectively. The last row shows the overall control performance $J = J_x + J_u$.

From the table, it is seen that the total control performance is decreased to roughly 65% of what it was before the introduction of the new sensor and the retuning of the observer, which shows that the combination of an extra output, the estimated model for it and the selected switching time improved the control.

7 Conclusion

This paper considered the situation where an additional sensor or actuator is added to a control system for the purpose of improving the performance.

We first developed analytical solutions for identification of the deterministic part of the models based on ideas from classical system identification and showed consistency for these incremental modelling methods. For the stochastic part a prediction error method has been developed, and we provided explicit formulae for the gradient.

With the incremental model in place, it is necessary to have methods to indicate if the new device is helpful or not, and if so, to indicate when to reconfigure the control system to use the new device.

To this end, correlation-based awareness measures were developed, which indicate if there is a potential gain to be obtained by using the new device. There are basically two different ways to define and measure correlation, the classical *mean of product* and the more advanced *variance reduction using models*. The models used can range from static linear over static non-linear to dynamic non-linear models.

The main advantage of using the *mean of product* approach, which involves models that are very generic and flexible, is that the risk of not noticing correlation that is actually present in the data is very small. On the other hand, a separate, computationally heavy calculation of cross correlation functions covering many lags and possibly using smoothers etc., would be required.

For the model-based variance reduction approach, which uses the present dynamical model and a dynamical model including the new device, the situation is the opposite. The disadvantage is that it will only be possible to discover relations covered by the model structures. On the other hand, the computational burden is relatively small, since no cross correlation is needed. Moreover, the necessary calculations are almost covered by the adaptive parameter estimation, which we discussed in the first half of the paper. Also, this method has the potential for covering both static and dynamic systems as well as both linear and nonlinear and gives one simple measure in contrast to cross correlation functions. Finally, the control relevant interpretation based on minimal variance control is advantageous as well. Thus, we chose the latter approach in this paper.

If the control objectives are directly related to each output, a condition for switching controller could be that the relevant awareness measures, in the example (37) and (38), are above some threshold. In general, however, the control objectives are related to the states and the objectives can only sometimes be directly specified from output and input only. Still, in most cases it is reasonable to assume that there is a strong relation between control objectives and the outputs. Consequently, the most reasonable switch condition is that awareness remains above the specified threshold for a certain time. Furthermore, to account for uncertainty, one could consider to increase the threshold by an amount corresponding to the magnitude of the uncertainty, if known.

Future work include more thorough investigation of statistical hypothesis that can indicate in a reliable manner when a new device provides sufficient information or actuation to be worth including in the control loop. Also, the estimated awareness measures are uncertain due to two factors. One is the substitution of mean values in (37)–(39) with average values, which introduces uncertainty even if the estimated parameters are correct. The other is that the estimated parameters may not be correct until after extensive identification, which may lead to errors in the state estimation. Thus, it would be interesting to investigate bounds on these uncertainties.

Acknowledgement

This work is supported by The Danish Research Council for Technology and Production Sciences.

References

[1] V. Alstad, S. Skogestad, and E. S. Hori. Optimal measurement combinations as controlled variables. *Journal of Process Control*, 19:138–148, 2009.

[2] Alexander Arvin Dehghani and Brian D. O. Anderson. An h_∞ algorithm for the windsurfer approach to adaptive robust control. *International Journal of Adaotive Control and Signal Processing*, pages 607–628, 2004.

[3] M. Blanke, R. Izadi-Zamanabadi, S.A. Bøgh, and C.P. Lunau. Fault-tolerant control systems – a holistic view. *Control Engineering Practice*, 5:693–702, 1997.

[4] T. J. Hastie and R. J. Tibshirani. *Generalized Additive Models*. Chapman & Hall, 1990.

[5] T. G. Hovgaard, M. Blanke, H. Niemann, and R. Izadi-Zamanabadi. Active sensor validation for refrigeration systems. In *Proceedings of the 2010 American Control Conference*, June 2010.

[6] Rolf Isermann. *Faults-Diagnosis Systems*. Springer, 2006.

[7] Torben Knudsen, Klaus Trangbaek, and Carsten Skovmose Kallesøe. Plug and play process control applied to a district heating system. In *17th IFAC World Congress (IFAC'08)*, pages 325–330. IFAC, IFAC, 2008.

[8] Niels Rode Kristensen, Henrik Madsen, and Sten Bay Jørgensen. A method for systematic improvement of stochastic grey-box models. *Computers & Chemical Engineering*, 28:1431–1449, 2004.

[9] W. S. Lee, B. D. O. Anderson, I. M. Y Mareels, and R. L. Kosut. On some key issues in the windsurfer approach to adaptive robust control. *Automatica*, 31(11):1619–1636, 1995.

[10] Lennart Ljung. *System Identification, Theory for the User*. Prentice-Hall information and system sciences series. Prentice-Hall, second edition, 1999.

[11] Lennart Ljung and Torsten Söderström. *Theory and Practice of Recursive Identification*. The MIT Press Series in Signal Processing, Optimization and Control. The MIT Press, Cambridge, Massachusetts, London, England, 1983.

[12] Donald W. Marquardt. An algorithm for least-squares estimation of nonlinear parameters. *J. Soc. Indust. Appl. Math.*, 11(2):431–441, June 1963.

[13] Henrik Aa. Nielsen and Henrik Madsen. A generalization of some classical time series tools. *Computational Statistics & Data Analysis*, 37:13–31, 2001.

[14] Athanasios Papoulis and S. Unnikrishna Pillai. *Probability, Random Variables and Stochastic Processes*. McGraw-Hill, 4 edition, 2002.

[15] R. J. Patton, C Khambhampati, and F. J. Uppal. Reconfiguration in networked control systems: fault tolerant control and plug-and-play. In *Proceedings of the 6th IFAC Symposium on Fault Detection, Supervision and Safety of Technical Processes*, pages 151–156, 2006.

[16] William H. Press, Saul A. Teukolsky, William T. Vetterling, and Brian P. Flannery. *Numerical Recipes in C*. Cambridge University Press, second edition, 1992.

[17] Jakob Stoustrup. Plug & play control: Control technology towards new challenges. *European Journal of Control*, 15(3-4):311–330, May-August 2009.

[18] K. Trangbaek, T. Knudsen, and C. S. Kallesoe. Plug and play process control of a district heating system. In *Proc. of European Control Conference*, August 2009.

[19] Klaus Trangbaek and Jan Bendtsen. Stable controller reconfiguration through terminal connections - a practical example. In *Proceedings of the 7th IEEE International Conference on Control and Automation*, December 2009.

[20] Klaus Trangbaek, Jakob Stoustrup, and Jan Bendtsen. Stable controller reconfiguration through terminal connections. In *Proceedings of the 2008 IFAC World Congress*, Seoul, Korea, July 2008.

[21] Ronald E. Walpole and Raymond H. Myers. *Probability and Statistics for Engineers and Scientists*. Macmillan Publishing Company, fifth edition, 1993.