Reactive Power Management in Islanded Microgrid – Proportional Power Sharing in Hierarchical Droop Control

Milczarek, Adam; Malinowski, Mariusz; Guerrero, Josep M.

Published in:
I E E E Transactions on Smart Grid

DOI (link to publication from Publisher):
10.1109/TSG.2015.2396639

Publication date:
2015

Document Version
Early version, also known as pre-print

Reactive Power Management in Islanded Microgrid – Proportional Power Sharing in Hierarchical Droop Control

Adam Milczarek, *Student Member, IEEE*, Mariusz Malinowski, *Fellow, IEEE*, and Josep M. Guerrero, *Fellow, IEEE*

***Abstract* — A microgrid (MG) is a local energy system consisting a number of energy sources (e.g. wind turbine or solar panels among others), energy storage units and loads that operate connected to the main electrical grid or autonomously. MGs provide flexibility, reduce the main electricity grid dependence and contribute to change the large centralized production paradigm to local and distributed generation. However, such energy systems require complex management, advanced control and optimization. Moreover, the power electronics converters have to be used to correct energy conversion and interconnected through common control structure is necessary. Classical Droop Control system is often implemented in microgrid. It allows to the correct operation of parallel voltage source converters (VSI) in grid connected as well as islanded mode of operation. However, it requires complex power management algorithms, especially in islanded microgrids, which balances system, improves reliability. The novel reactive power sharing algorithm is developed, which takes into account the converters parameters as apparent power limit and maximum active power. The developed solution is verified in simulation and compared with other known reactive power control methods.**

***Index Terms*— distributed generation, droop control, microgrid, power converters, reactive power sharing.**

I. Introduction

MICROGRID (MG) is a separate system that produces and storages electrical energy, which consists of renewable energy sources (RES), local loads and energy storage based on batteries or supercapacitors. It is inherent part of modern and popular smartgrids [1], [2], which includes also intelligent buildings, electrical car stations etc. All RES are using power electronics devices (e.g. converters), which number significantly increasing and costs decreasing in range 1% - 5% every year [3] - [7]. RES are usually connected to the grid and many installations cause the parallel operation of RES close to each other. This is one of reasons to future change of the classical structure of electrical power systems, toward new solution containing distributed generation, energy storage, protection and control technologies, improving their performances [8].

Microgrid is highly advanced system from control and communication point of view. It has to manage power for local loads as well as control all converters with high efficiency and accuracy, especially when microgrid operates as islanded system. Islanding mode of operation provide the uninterruptible power supply (UPS) for local loads during grid faults. The performances of islanded microgrid are specified according to IEEE Std. 1547.4 [9]. With increasing number of RES applications, operating parallel, close to each other (few km) and with developed islanded mode of operation, the microgrids are become perfect solution for RES integration.

Fundamental algorithms of AC microgrids, described in literature [10]-[20], are based on master-slave control or hierarchical droop control. The first solution includes only one converter with voltage control loop (VCL), operating as a master, and others operating in current control loop (CCL) - slaves. The produced power is controlled by sources with CCL and the voltage amplitude and frequency is keeping in point of common coupling (PCC) by master unit. Disadvantage of this solution is no possibility to connect other VCL sources to microgrid, which are the most popular and used RES solutions. The second control solution, called Droop Control, includes many VCL sources and provides possibility to many different RES interconnection. The idea of droop control is based on active and reactive power related to voltage frequency and amplitude droop on coupled impedances. Unfortunately, classical droop control method with proportional droop coefficients does not provides proper reactive power sharing between converters connected to common AC bus. In classical approach, the equal reactive power sharing can be obtained only when active powers are equal and droop coefficients are well chosen. When active powers are changing, the reactive power sharing cannot be controlled causing overload or reactive power circulation between converters. Moreover, the important issue in droop control is static trade-off between voltage regulation and reactive power [21]. For increasing reactive power, the voltage

The project was funded by the National Science Centre granted under Decision No DEC-2013/09/N/ST7/02814 "Development and investigation of reactive power and energy storage management algorithms in smart microgrid".

A. Milczarek is with the Electrical Engineering Department, Warsaw University of Technology, Poland (e-mail: adam.milczarek@ee.pw.edu.pl).

M. Malinowski is with the Electrical Engineering Department, Warsaw University of Technology, Poland (e-mail: malin@isep.pw.edu.pl).

J.M. Guerrero is with the Energy Technology Department, Aalborg University, Denmark (e-mail: joz@et.aau.dk).

droop on converter's output impedance also increase, what may cause overvoltage. In order to provide appropriate power sharing and minimize the risk of converter damage the many additional aspects (e.g. nominal apparent power, instantaneous active power, nominal voltage of converter) have to be considered in control system.

There are only few papers describing reactive power sharing between parallel operating converters in islanded AC microgrids. The researchers focused on equal reactive power sharing (ERPS) between all RES usually controlled by microgrid central control unit [22]-[27] or implemented as virtual impedances [15], [28]. From the other hand, researches consider reactive power sharing in order to optimize transmission power losses by appropriate optimization algorithm (e.g. particle swarm optimization) [29]-[31], which can be neglected in microgrids, hence the short distances and the line impedances are low.

However, algorithms described in literature are not considering capabilities of single RES, which have limited apparent power. If active power, usually calculated from Maximum Peak Power Tracking (MPPT) algorithms [32]-[37], obtain almost nominal apparent converter limit the equal power sharing algorithms cannot be used, because the overload can occur, what leads to damage or exclusion from operation of RES unit.

The new reactive power sharing algorithm is developed and presented in this paper. In first section the current solutions and problems of reactive power sharing are described. In section II the classical droop control is presented, which is used in converter's control system. A new algorithm is featured in section III and the simulation results are shown in section IV in order to presenting the problem of reactive power sharing and proper operation of developed solution.

II. Classical Droop Control

When at least two RES are connected through energy converters to the microgrid, the droop control method is often applied [11], [14]-[15], what provides the correct parallel operation of voltage source converters (VSI). The equivalent circuit of two converters connected to common AC microgrid bus can be presented by Fig. 1.

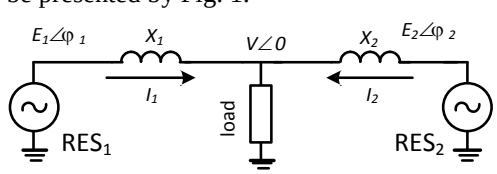

Fig. 1. Equivalent circuit of parallel connected VSIs.

Presented scheme is similar to the equivalent circuit of synchronous generator (SG), hence the active and reactive power of *k-th* converter connected to AC microgrid can be described as:

$$P_k = \frac{E_k V}{X_k} \sin \varphi_k \tag{1}$$

$$Q_k = \frac{E_k V \cos \varphi_k - V}{X_k} \tag{2}$$

where P – active power, E – converter voltage amplitude, V – voltage amplitude in point of common coupling, X – coupling impedance, φ – angle of converter voltage (see Fig. 1).

Based on above equations it can be assumed, that:

- active power P mainly depends on φ, which is changing by ω,
- reactive power Q depends on voltage amplitude E.

Hence, the P – ω and Q – E droop characteristics can be drawn (Fig. 2). In order to implement these characteristics in VSI control algorithm, the outer droop control loops are created (Fig. 3), which can be described by (3) and (4).

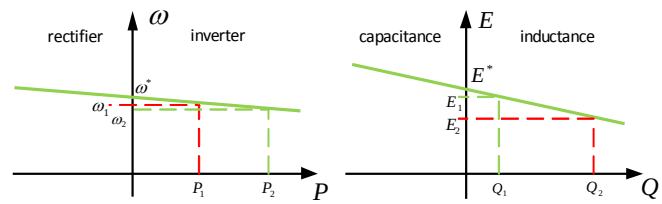

Fig. 2. $P-\omega$ and $Q-E$ droop characteristics

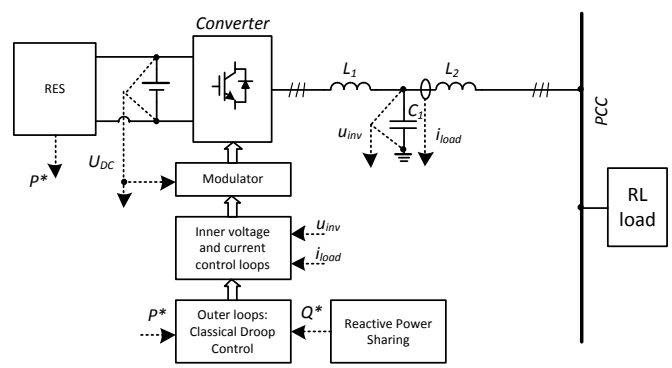

Fig. 3. Block scheme of control structure for one of the converters in islanded microgrid

$$\omega = \omega^* - G_p(s) \cdot (P - P^*) \tag{3}$$

$$E = E^* - G_q(s) \cdot (Q - Q^*) \tag{4}$$

where: E and ω are referenced voltage amplitude and frequency for inner control loops, E^* and ω^* are nominal voltage amplitude and frequency, P and Q are calculated active and reactive power, P^* and Q^* are the active and reactive power referenced values, $G_p(s)$ and $G_q(s)$ are corresponding transfer functions.

Typically in classical droop control $G_p(s)$ and $G_q(s)$ are proportional (constant) droop coefficients. It has happened, when microgrid not includes any energy storage and total load cannot absorb total injected power. These proportional coefficients can be calculated by (5) and (6). Block schemes of $P-\omega$ and $Q-E$ control loops is presented on Fig. 4.

$$G_p(s) = m = \frac{\Delta\omega_{\max}}{P_{\max}} \tag{5}$$

$$G_q(s) = n = \frac{\Delta E_{\max}}{Q_{\max}} \tag{6}$$

where: m – active power coefficient, n – reactive power coefficient, $\Delta\omega_{max}$ – maximum allowed voltage frequency

droop, ΔE_{max} – maximum allowed voltage amplitude droop, P_{max} – maximum allowed active power, Q_{max} – maximum allowed reactive power.

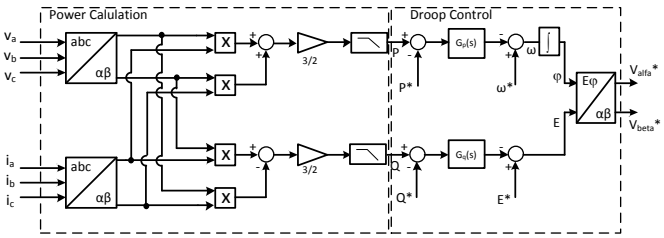

Fig. 4. Block scheme of classical droop control

III. Proportional Reactive Power Sharing (PRPS)

A. Development of Proportional Reactive Power Sharing Algorithm

In order to manage reactive power in islanded AC microgrid the instantaneous active power and nominal apparent power of each converter have to be taking into consideration. Based on Fryze power theory, that power can be represented by orthogonal vectors, which lengths are active and reactive power and their vector sum is equal to the apparent power. The reactive power limit for each converter can be calculated:

$$Q_{\max} = \sqrt{S_N{}^2 - P^2} \tag{7}$$

where Q_{max} is the maximum of possible converter's reactive power, S_N is the nominal apparent power of converter, P is the instantaneous active power of converter. In this paper the harmonic (distortion) power is neglecting since only resistive-inductive load is considered.

This relation for several converters with different possible nominal apparent powers and equal reactive powers (three converters in this example) can be interpreted graphically in Fig. 5a.

In power balanced system the vector sum of converter's apparent powers is equal to load apparent power regardless of the power management method, however the algebraic sum of apparent powers is different for each control strategy. As a result, there is possible situation, that sum of converter's apparent powers is higher than the demand, which may lead to converters operating with maximum apparent power. Furthermore, if control priority is keeping maximum active power, the overload of converter can occur, as it is shown in Fig. 5b for converter 1, what is not acceptable, because it cause disable or damage of this device.

In order to improves the reactive power management and keeping total generated apparent power below maximum level as long as possible, the proposed reactive control algorithm is keeping relation $S_L / \sum S_k$ on the highest level. It will allow better exploitation of each RES in whole microgrid, what can increase possible to active power generation of each converter without reaching of apparent power limit.

When converters are operating with apparent powers much lower than nominal parameters, the above relation is equal one and reactive power is sharing proportional to active power of each converter (Fig. 6a), based on (8).

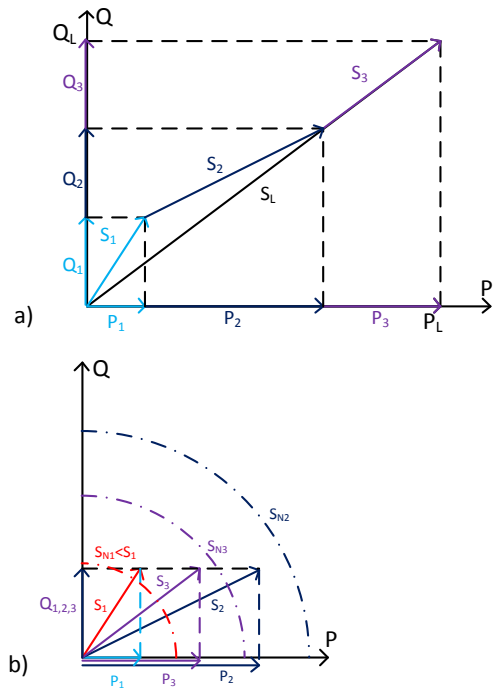

Fig. 5. *P-Q* characteristics for three parallel converters with significant differences between nominal apparent powers and equal reactive power sharing: a) vector sum of converter's and load apparent power, b) converter's apparent powers and them nominal apparent powers – overload for inverter 1 (note: apparent power S_1 excite nominal apparent power S_{N1}). $P_{1,2,3}$ – active power for each inverter, $Q_{1,2,3}$ - reactive power for each inverter, $S_{1,2,3}$ – apparent power for each inverter, $S_{N1,2,3}$ - nominal apparent powers, P_L – load active power, Q_L – load reactive power, S_L – load apparent power

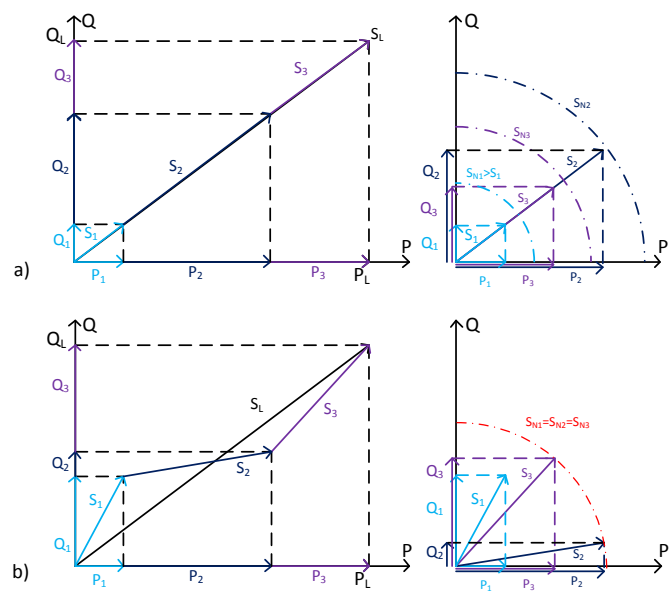

Fig. 6. *P-Q* characteristics for three parallel inverters with PRPS: a) unlimited case b) limited case – inverter 2 and 3 operate with maximum apparent power. $P_{1,2,3}$ – active power for each inverter, $Q_{1,2,3}$ - reactive power for each inverter, $S_{1,2,3}$ – apparent power for each inverter, $S_{N1,2,3}$ - nominal apparent powers, P_L – load active power, Q_L – load reactive power, S_L – load apparent power

Unfortunately, this situation is only one of possible case and the limitations of converters have to be considered in reactive sharing control algorithm in order to avoid overloads and developed complete control strategy. Hence, two additional conditions (9) and (10) have to be fulfilled for each *k-th*

converter. First condition prevents overloading of converter and the second one must be fulfilled to preserve the balance of reactive power in islanded microgrid.

The relation $S_L / \sum S_k$ in limited cases is lower than one, but it is keeping on highest possible level (Fig. 6b) providing the best exploitation of RES with maximum active power.

$$Q_{uk} = \frac{Q_L}{P_L} P_k \tag{8}$$

$$P_k^{\,2} + Q_k^{\,2} = S_k^{\,2} \le S_{Nk}^{\,2} \quad \forall k \tag{9}$$

$$\sum_k Q_k = Q_L \quad \forall k \tag{10}$$

where: Q_{uk} – calculated reactive power value for unlimited case, Q_L – total reactive power demand, P_L – total active power, P_k – active power of "k" converter, Q_k – reactive power of "k" converter, S_k – apparent power of "k" converter, S_{Nk} – nominal apparent power of "k" converter.

Based on (8), (9), (10) and described analysis of reactive power sharing novel control algorithm was developed. The flowchart of the algorithm is shown on Fig. 7. In first stage system parameters are saved in K-elements tables, where K – number of converters, $P[K]$ – measured active powers, $S_N[K]$ – nominal apparent powers. Furthermore, limits of reactive powers for each converter Q_{maxk}, as well as total active power P_L (11) are calculated.

$$P_L = \sum_k P_k \tag{11}$$

In next stage, the auxiliary parameter *Qsum*, defined as a sum of reference reactive powers of all limited and unlimited converters, is compared with load reactive power. This parameter allows checking if reactive power balance is retained. When *Qsum*, as a result of stages 3-5 described below is different than total reactive power Q_L, then algorithm is going to stage 3, otherwise the stage 6 fallowed and final referenced values of reactive power Q_k* are defined for each converters.

In stages 3-5 the main calculation process of the reference values is executed. Firstly, the reactive power values proportional to active powers are calculated (stage 3). The proportionality factor is composed of parameters *Prest* and *Qrest*, which are total active and reactive power *PL* and *QL* in unlimited case, otherwise they are smaller by excluding all active and reactive powers of limited converters (stage 5). Next, the limitation is checked (stage 4) and the reference value is set to maximum or to proportional. Depending on the result, auxiliary parameters *Qlim*, *Plim* or *Qunl*, *Punl* are calculated, which are sums of active and reactive power of converters operating with maximum apparent power or below it correspondingly (stage 4). Then after all K iterations, the parameters *Prest*, *Qrest*, *Qsum* are calculated and the algorithm is going back to stage 2, where the condition (10) is checked, as mentioned above.

B. *Implementation of developed algorithm*

For more extensive microgrid (e.g. number of sources $K>10$), the calculation of final reference values in one common control unit (e.g. SCU) may be long and not be possible, especially if calculations in SCU have to be done in one converter switching period (usually 100-500 µs). Hence, based on Fig. 7 the algorithm can be splitted between all primary control units (PCU) containing inner control loops and secondary control unit (SCU), which is mainly responsible for compensating the voltage amplitude and frequency deviation caused by droop control in PCU.

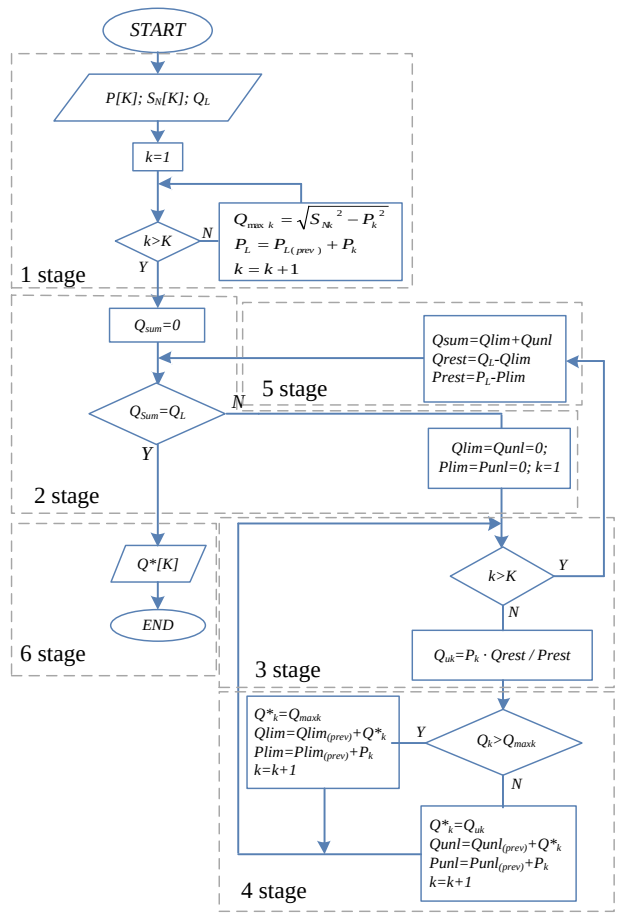

Fig. 7. Block diagram of developed reactive power sharing algorithm

As a result, the time calculation in SCU may be reduced improving control dynamic and transient time. Proposed implementation of presented algorithm allows executing many processes parallel in PCUs. The block scheme of proposed control algorithm implemented in PCUs and SCU is shown on Fig. 8.

The algorithm calculates the reactive power limit (7) and proportional reactive power value for unlimited cases (8) in each primary control unit independently. Furthermore, the auxiliary parameters Ps_k, Qs_k are defined (11), (12), based on actual reactive power reference value Q*. In order to fulfill condition (10) the additional value of reactive power ΔQ_k has to be added to value of unlimited case Q_{uk} for each unlimited converter. It is defined by (13) and depends on sum of active power of limited converters Ps_L, sum of reactive power of limited converters Qs_L, total active and reactive powers P_L and Q_L, reactive power value of unlimited case Qu_k and auxiliary

parameter Qs_k. The parameter ΔQ_k can be different for each k, proportionally to P_k, hence the proportional reactive power sharing for unlimited converters is still satisfied. The final reference values of reactive powers are calculated, when the all conditions (9-10) are fulfilled and the transferred data between PCUs and SCU do not change in next converter switching period. Furthermore, the steady-state of reactive power sharing in microgrid is obtained when the signals from controllers in inner control loops are established. This process may take a few hundred milliseconds, depending on the number of RES.

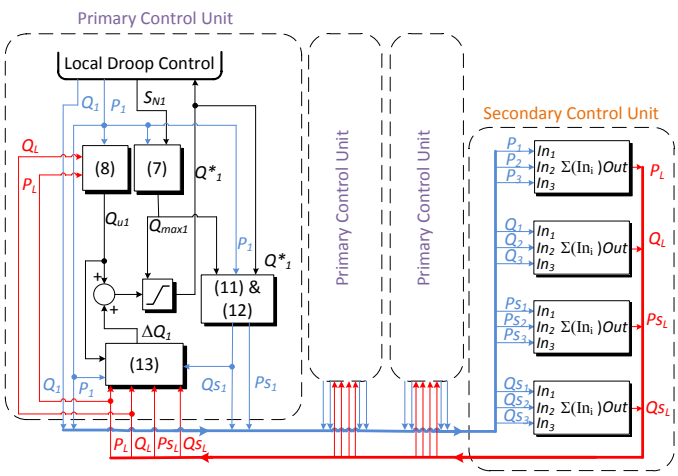

Fig. 8. Block diagram of developed reactive power sharing algorithm in real-time implementation.

$$Ps_k = \begin{cases} P_k \ if \ Q^*_k = Q_{\max k} \\ 0 \ otherwise \end{cases} \quad (11)$$

$$Qs_k = \begin{cases} Q^*_k \ if \ Q^*_k = Q_{\max k} \\ 0 \ otherwise \end{cases} \quad (12)$$

$$\Delta Q_k = \begin{cases} \left(\frac{P_k}{P_L - Ps_L} \cdot (Q_L - Qs_L) - Q_{uk} \right) if \ Q_{uk} \neq Qs_k \\ \Delta Q_k \ otherwise \end{cases} \quad (13)$$

$$Q^*_k = Q_{uk} + \Delta Q_k \quad (14)$$

C. PRPS algorithm in real distributed control system

In real distributed control system, several different processors in PCUs and remote SCU need to share their computational results. Any synchronization between PCUs and SCU are not required in presented solution. The delay can be neglected for modern communication infrastructure with transmission speed in range of Mb/s and only few km distances between control units in all microgrid elements. Therefore, application of distributed control system for developed algorithm was proposed (Fig. 8) what can allow for higher computational speed.

One of the possible communication problems is loss data in some periods. However in presented solution, where the transferred data are used only to calculations of referenced reactive powers for the lowest control loops in PCUs, it may cause the longer transient time (worse dynamic of control signals).

Another problem in distributed control system is different sampling time for PCUs (usually 5 – 10 kHz) and SCU (it can work with high sampling frequency (e.g. 40 kHz)). These differences will not affect the proper operation of converters in microgrid.

IV. Simulation Results

The simulation model was built in Saber Synopsys to verify described solution. The block scheme of simulation model is shown in Fig. 9. The three power converters connected to DC voltage sources (operating as a RES) and converter with storage was included in research. In order to meet the demand of active power the energy storage is unlimited in analysis, what provides the correct balance of active power in islanded microgrid. Furthermore, the line impedances (Z_{L1}, Z_{L2}, Z_{L3}, Z_{L4}) included in Fig. 9 can be neglected in low-voltage microgrid with LCL filters, where the impedances are much lower than filter impedances. In Table I the parameters of simulation model are presented.

The simulation was performed and compared for three different control methods: classical droop control, equal reactive power sharing [22] and proposed proportional power sharing.

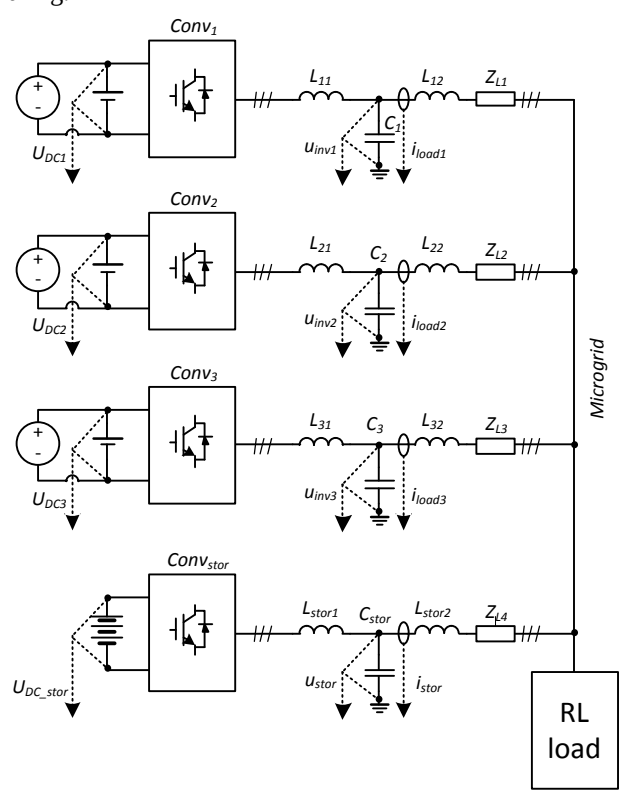

Fig. 9. Block scheme of simulation model

TABLE I
SIMULATION MODEL PARAMETERS

Converter 1	
Nominal apparent power	6000 VA
Inductance L_{11}	2 mH
Capacitance C_1	10 μF
Inductance L_{12}	3 mH
Converter 2	
Nominal apparent power	11000 VA
Inductance L_{21}	3 mH
Capacitance C_2	10 μF
Inductance L_{22}	2 mH
Converter 3	
Nominal apparent power	3200 VA
Inductance L_{31}	4 mH
Capacitance C_3	10 μF
Inductance L_{32}	5 mH
Storage Converter	
Nominal apparent power	50000 VA
Inductance L_{stor1}	4 mH
Capacitance C_{stor}	10 μF
Inductance L_{stor2}	4 mH
Load power	
Active power	21500 W
Reactive power	6000 Var

Firstly, the islanded microgrid presented by Fig. 9 was managed by basic droop control, without power management. For reactive power load connected to the microgrid, the uncontrolled reactive power sharing may result the overload of converter, even if the active power will be reduced to minimum. This situation is shown by converter "3" in Fig. 10, where active power p_3 is reduced almost to zero and apparent power S_3 is still higher than nominal value S_{N3}.

Another drawback of this solution is possible reactive power circulation, as it is presented after 1s in Fig. 10, where the maximum apparent power is limited by nominal converter parameters. Fig. 11 also presents similar situation but without power limitation, where the active power calculated from mppt is changing for converter "2" (p_mppt_2) and "3" (p_mppt_3). It causes undesirable reactive power sharing in microgrid (the reactive power q_2 start to have capacitive character, what has to be compensated by other converters to keep the balance). Notice, that the reactive powers are equal when the active powers are equal as well (Fig. 11), which result from the proper selection of droop characteristics, but classical droop control cannot avoid the reactive power circulation.

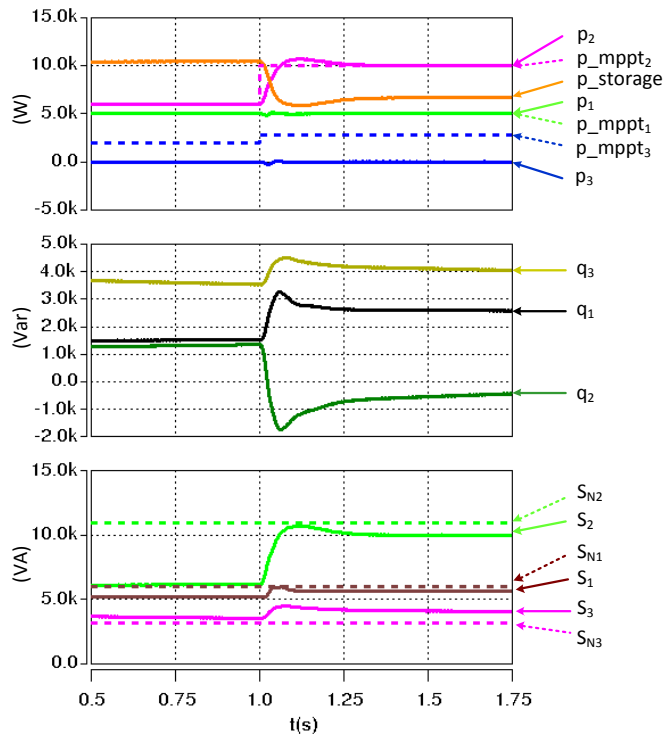

Fig. 10. Powers of converters in islanded microgrid without reactive power management with step change of maximum active power from RESs: p_1, p_2, p_3, $p_{storage}$ – converters active powers; p_mppt_1, p_mppt_2, p_mppt_3 – maximum active powers calculated from MPPT; q_1, q_2, q_3 – converters reactive powers; S_1, S_2, S_3 – converters apparent powers; S_{N1}, S_{N2}, S_{N3} – converters nominal apparent powers.

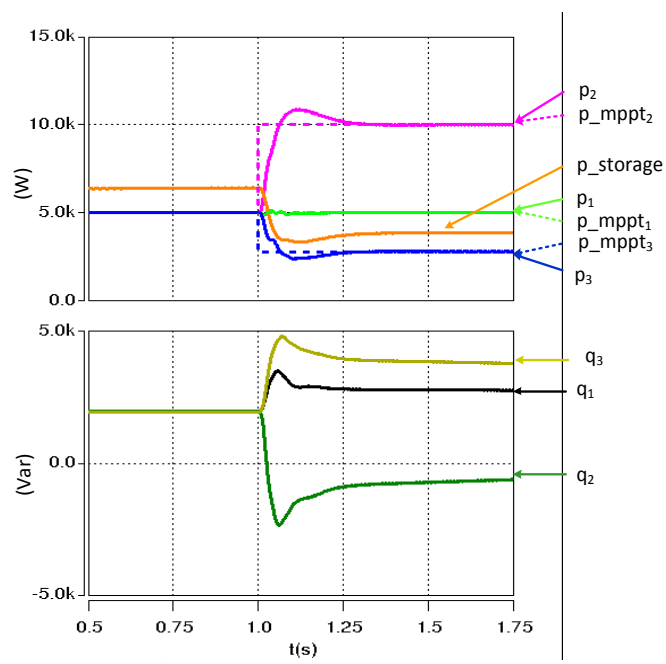

Fig. 11. Powers of converters in islanded microgrid without reactive power management with step change of maximum active power from RESs and unlimited nominal power: p_1, p_2, p_3, $p_{storage}$ – converters active powers; p_mppt_1, p_mppt_2, p_mppt_3 – maximum active powers calculated from MPPT; q_1, q_2, q_3 – converters reactive powers;

In Fig. 12 there are presented powers of converters in microgrid with equal reactive power sharing algorithm [22]. In this solution in steady-state operation of converters the reactive powers q_1, q_2, and q_3 are equal independently on active powers. It prevents the reactive power circulation, but as it is shown in Fig. 12 after step change of active power, the equal reactive power of converters causes limitation of active power p_3, in order to not exciting the nominal level of apparent power. Hence, the RES cannot operate with maximum active power, calculated from mppt algorithm [38].

Problems described above can be eliminated by using proportional power sharing algorithm, proposed in this paper. The solution prevents converters to be as reactive power load and provides maximum active powers from RES, keeping apparent power below nominal level as long as possible (Fig. 13).

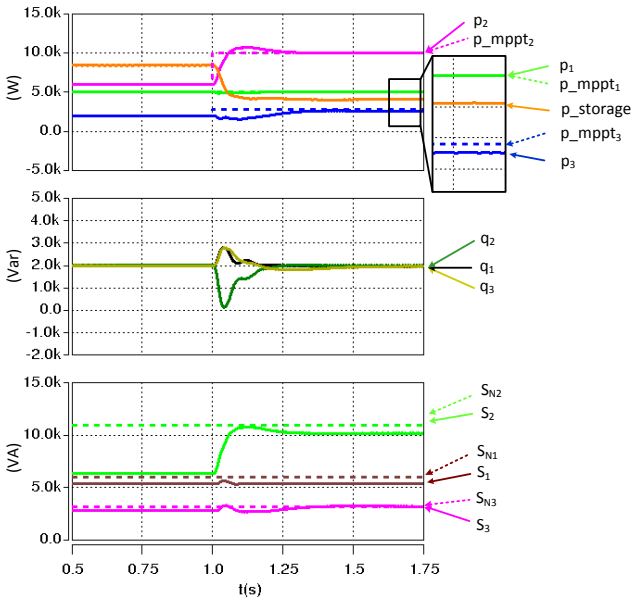

Fig. 12. Powers of converters in islanded microgrid with equal reactive power sharing with step change of maximum active power from RESs: p_1, p_2, p_3, $p_{storage}$ – converters active powers; p_mppt_1, p_mppt_2, p_mppt_3 – maximum active powers calculated from MPPT; q_1, q_2, q_3 – converters reactive powers; S_1, S_2, S_3 – converters apparent powers; S_{N1}, S_{N2}, S_{N3} – converters nominal apparent powers.

V. Conclusions

Microgrid is the advance system for RES integration with own control structure. Usually the Hierarchical Control is implemented with Droop Control in primary level. In islanded mode of operation there is the need to manage reactive power sharing and allow RESs work with maximum active power. Hence, the new reactive power sharing algorithm was proposed in this paper, based on the analysis of power sharing between converters in microgrid. The novel solution prevents the reactive power circulation and disconnection or damage of any converter in microgrid. Moreover, it allows to converters operation with MPPT, causing better exploitation of each RES and keeping apparent power of each unit below nominal level as long as possible. Because of short switching period of power electronics converters in RES, the algorithm was developed for implementation in hierarchical control structure, providing parallel calculations in each PCU. Simulation analysis was performed, where the three solutions of power control in islanded microgrid were compared what confirms the correct operation of developed algorithm and shows the advantage of proportional power sharing over others solution presented in literature.

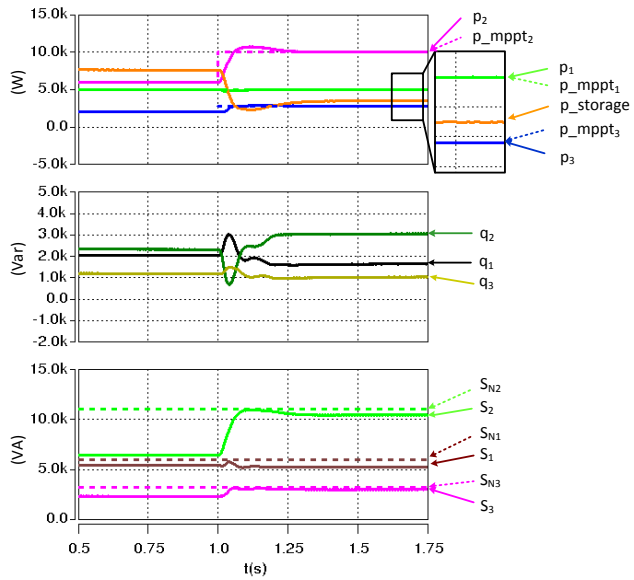

Fig. 13. Powers of converters in islanded microgrid without reactive power management with step change of maximum active power from RESs: p_1, p_2, p_3, $p_{storage}$ – converters active powers; p_mppt_1, p_mppt_2, p_mppt_3 – maximum active powers calculated from MPPT; q_1, q_2, q_3 – converters reactive powers; S_1, S_2, S_3 – converters apparent powers; S_{N1}, S_{N2}, S_{N3} – converters nominal apparent powers.

References

[1] Y. Xinghuo, C. Cecati, T. Dillon, M.G. Simões, "The New Frontier of Smart Grids", *IEEE Industrial Electronics Magazine*, Vol. 5, pp:49-63 Sept. 2011.

[2] F. Blaabjerg, J.M. Guerrero, "Smart Grid and Renewable Energy Systems", in Electrical Machines and Systems (ICEMS), 2011 International Conference, 2011, pp. 1-10.

[3] European Photovoltaic Industry Association (2012, May), Global Market Outlook for Photovoltaics Until 2016 [Online]. Available: http://www.epia.org/fileadmin/user_upload/Publications/Global-Market-Outlook-2016.pdf

[4] Renewable Energy Policy Network for the 21st Century (2011) Renewables 2011 Global Status Report, [Online]. Available: www.ren21.net/REN21Activities/Publications/GlobalStatusReport/GSR2011/tabid/56142/Default.aspx

[5] Global Wind Energy Council (2011), Global Wind Report: Annual market update 2011, [Online]. Available: http://gwec.net/wp-content/uploads/2012/06/Annual_report_2011_lowres.pdf

[6] The European Wind Energy Association (2013, February), Wind in power, 2012 European statistics, [Online]. Available: http://www.ewea.org/fileadmin/files/library/publications/statistics/Wind_in_power_annual_statistics_2012.pdf

[7] The European Wind Energy Association (2012, February), Wind in power, 2011 European statistics, [Online]. Available: www.ewea.org/fileadmin/files/library/publications/statistics/Wind_in_power_2011_European_statistics.pdf

[8] ZPRYME and IEEE Smart Grid (2012, November), Power Systems of the Future: The Case for Energy Storage, Distributed Generation and Microgrids [Online]. Available: http://www.admu.edu.ph/sites/default/files/zprymepowersystems.pdf

[9] Guide for Design, Operation, and Integration of Distributed Resource Island Systems with Electric Power Systems, IEEE Standard 1547.4.

[10] A. Engler, N. Soultanis, “Droop Control in LV – Grids”, International Conference on Future Power Systems, 2005, pp. 1-6.

[11] J. Kim, J.M. Guerrero, P. Rodriguez, R. Teodorescu, K. Nam, „Mode Adaptive Droop Control With Virtual Output Impedances for an Inverter-Based Flexible AC Microgrid”, IEEE Transactions on Power Electronics, Vol. 26 No. 3, pp. 689-700, March 2011.

[12] J. Yaoqin, L. Dingkun, P. Shengkui, “Improved Droop Control of Parallel Inverter System in Standalone Microgrid”, 8th International Conference on Power Electronics - ECCE Asia, The Shilla Jeju, Korea, May 30-June 3, 2011, pp. 1506-1513.

[13] J. Seo, H. Lee, W.Jung, D. Won, “Voltage control method using modified voltage droop control in LV distribution system”, Transmission & Distribution Conference & Exposition: Asia and Pacific, 26-30 Oct. 2009, pp. 1-4.

[14] Ch. Lee, Ch. Chu, P. Cheng, “A new droop control method for the autonomous operation of distributed energy resource interface converters”, Energy Conversion Congress and Exposition (ECCE), 2010, pp. 702-709.

[15] J.M. Guerrero, J.C. Vasquez, J. Matas, L.G. de Vicuna, M. Castilla, “Hierarchical Control of Droop-Controlled AC and DC Microgrids—A General Approach Toward Standardization”, IEEE Transactions on Industrial Electronics, Vol:58, Issue: 1, pp. 158-172, Jan. 2011

[16] W.Ch. Shan, L.X. Lin, G. Li, L.Y. Wei, “A seamless operation mode transition control strategy for a microgrid based on master-slave control”, Control Conference (CCC), July 2012, pp. 6768 – 6775.

[17] V. Verma, G. G. Talpur, “Decentralized Master-Slave operation of microgrid using current controlled distributed generation sources”, IEEE International Conference on Power Electronics, Drives and Energy Systems (PEDES), Dec. 2012, pp. 1-6.

[18] V. Verma, G. G. Talpur, “Master-slave current control DGs in a microgrid for transient decoupling with mains”, IEEE 5th India International Conference on Power Electronics (IICPE), Dec. 2012, pp. 1-6.

[19] A. Micallef, M. Apap, C. Spiteri-Staines, J. M. Guerrero, and J. C. Vasquez, “Reactive Power Sharing and Voltage Harmonic Distortion Compensation of Droop Controlled Single Phase Islanded Microgrids,” *IEEE Trans. Smart Grid*, vol. 5, no. 3, pp. 1149–1158, May 2014.

[20] N. Eghtedarpour and E. Farjah, “Power Control and Management in a Hybrid AC/DC Microgrid,” *IEEE Trans. Smart Grid*, vol. 5, no. 3, pp. 1494–1505, May 2014

[21] Q. Ch. Zhong, “Robust Droop Controller for Accurate Proportional Load Sharing Among Inverters Operated in Parallel”, IEEE Transaction on Industrial Electronics, Vol. 60 No. 4, pp. 1281-1290, April 2013.

[22] A. Micallef, M. Apap and C. Spiteri Staines, J.M. Guerrero Zapata, “Secondary Control for Reactive Power Sharing and Voltage Amplitude Restoration in Droop-Controlled Islanded MicroGrids”, 3rd IEEE International Symposium on Power Electronics for Distributed Generation Systems (PEDG), 2012, pp 492 – 498.

[23] Y. W. Li, Ch. Kao, “An Accurate Power Control Strategy for Power-Electronics-Interfaced Distributed Generation Units Operating in a Low-Voltage Multibus Microgrid”, IEEE Transactions on Power Electronics, Vol. 24, Issue:12, pp. 2977-2988, Dec. 2009.

[24] Ch. K. Sao, P.W. Lehn, “Autonomous load sharing of voltage source converters”, IEEE Transactions on Power Delivery, Vol. 20, Issue:2, pp. 1009-1016, Apr. 2005.

[25] J. He, Y.W. Li, “An accurate reactive power sharing control strategy for DG units in a microgrid”, IEEE 8th International Conference on Power Electronics and ECCE Asia (ICPE & ECCE), May-June 2011, pp. 551-556.

[26] Q. Shafiee, J. C. Vasquez, J. M. Guerrero, “Distributed Secondary Control for Islanded Microgrids – A Networked Control System Approach”, IEEE Transactions on Power Electronics, vol.29, no.2, pp.1018-1031, Feb. 2014.

[27] A. Micallef, M. Apap, C. Spiteri-Staines, J.M. Guerrero, J.C. Vasquez,, "Reactive Power Sharing and Voltage Harmonic Distortion Compensation of Droop Controlled Single Phase Islanded Microgrids," IEEE Transactions on Smart Grid, vol.5, no.3, pp.1149-1158, May 2014.

[28] J. He, Y. W. Li, J.M. Guerrero, J. C. Vasquez, F. Blaabjerg, “An islanding microgrid reactive power sharing scheme enhanced by programmed virtual impedances”, 3rd IEEE International Symposium on Power Electronics for Distributed Generation Systems (PEDG), June 2012, pp. 229-235.

[29] A.A.A. Esmin, G. Lambert-Torres, A.C.Z. de Souza, “A hybrid particle swarm optimization applied to loss power minimization”, IEEE Transactions on Power Systems, Vol. 20, Issue: 2, pp. 859-866, May 2005.

[30] H. Wang, H. Jiang, K. Xu, G. Li, “Reactive power optimization of power system based on improved particle swarm optimization”, 4th International Conference on Electric Utility Deregulation and Restructuring and Power Technologies (DRPT), July 2011, pp. 606-609.

[31] B. Mozafari, A.M. Ranjbar, A.R. Shirani, A. Mozafari, “Reactive Power Management in a Deregulated Power System with Considering Voltage Stability: Particle Swarm Optimization Approach”, 18th International Conference on Electricity Distribution, Turin, 6-9 June 2005, pp. 1-4.

[32] G. Hsieh, H. Hsieh, Ch. Tsai, Ch. Wang, “Photovoltaic Power-Increment-Aided Incremental-Conductance MPPT With Two-Phased Tracking”, IEEE Transactions on Power Electronics, Vol. 28, No. 6, pp. 2895-2911, June 2013.

[33] K. S. M. Raza, H. Goto, O. Ichinokura, H. Guo, „An improved and very efficient MPPT controller for PV systems subjected to rapidly varying atmospheric conditions and partial shading”, Power Engineering Conference, AUPEC 2009. Australasian Universities, Sep. 2009, pp. 1-6.

[34] A. Barchowsky, J.P. Parvin, G.F. Rees, M.J. Korytkowski, B.M. Grainger, “A comparative study of MPPT methods for distributed photovoltaic generation”, Innovative Smart Grid Technologies (ISGT), IEEE PES, 2012, pp. 1-7.

[35] M. Kiani, D. Torregrossa, M. Simoes, F. Peyraut, A. Miraoui, “A novel maximum peak power tracking controller for wind energy systems powered by induction generators”, Electrical Power & Energy Conference (EPEC), Oct. 2009, pp.1-3.

[36] B. Neammanee, S. Sirisumranukul, S. Chatratana, “Control Performance Analysis of Feedforward and Maximum Peak Power Tracking for Small- and Medium-Sized Fixed Pitch Wind Turbines”, 9th International Conference on Control, Automation, Robotics and Vision. ICARCV '06, 2006, pp. 1-7.

[37] M. Rolak, R. Kot, M. Malinowski, Z. Goryca, J. T. Szuster „AC/DC converter with Maximum Peak Power Tracking algorithm for complex solution of Small Wind Turbine”, Electrical Review, No. 6/2011, R.87, pp: 91-96, Nov. 2011.

[38] M.Rizo “Control Contributions of the universal operation of wind turbines” PhD Thesis, Madrid 2013, unpublished.