The interaural time difference in binaural synthesis

Minnaar, Pauli; Plogsties, Jan; Olesen, Søren Krarup; Christensen, Flemming; Møller, Henrik

Published in:
Proceedings of the 108th Audio Engineering Society Convention

Publication date:
2000

The Interaural Time Difference in Binaural Synthesis

5133 (L - 2)

Pauli Minnaar, Jan Plogsties, Søren Krarup Olesen, Flemming Christensen and Henrik Møller
Acoustics Laboratory, Aalborg University, Denmark

Presented at
the 108th Convention
2000 February 19-22
Paris, France

AES

AN AUDIO ENGINEERING SOCIETY PREPRINT

The Interaural Time Difference in Binaural Synthesis

Pauli Minnaar, Jan Plogsties, Søren Krarup Olesen,
Flemming Christensen, Henrik Møller

Acoustics Laboratory, Aalborg University
Fredrik Bajers Vej 7 B4, DK-9220 Aalborg, Denmark
acoustics@acoustics.auc.dk

Abstract

A previous listening experiment showed that a pair of head-related transfer functions can be represented by its minimum phase components and a pure delay as interaural time difference (ITD), where the ITD is determined as the interaural group delay difference of the excess phase components evaluated between 0 and 1.5 kHz. The ITDs are determined from the HRTFs of 70 people, spherical and ellipsoidal head models and an artificial head, and by the Woodworth/Schlosberg formula. Several methods for calculating the ITD are described and their results analyzed.

0 Introduction

In binaural synthesis virtual sound sources are implemented by convolving anechoic signals with head-related transfer functions (HRTFs). An HRTF is defined as the transfer function measured from a sound source (in free field) to the ear of a human or artificial head, divided by the transfer function to the microphone in the middle of the head with the head absent. An HRTF can be decomposed into a minimum phase component and an excess phase component, of which the latter can be decomposed into a linear phase component and an all-pass component. A listening experiment by Plogsties et al. [1] showed that the all-pass component can be replaced by a pure delay, without audible consequences. This delay is found as the group delay of the all-pass component evaluated at 0 Hz. Therefore a pair of HRTFs can be represented by their minimum phase components (one for each ear) and a pure delay as ITD, where the ITD is the interaural group delay difference evaluated at 0 Hz, IGD_0, of the excess phase components.

Minnaar et al. [2] determined thresholds of audibility for single 2nd order all-pass sections with center frequencies between 1 kHz and 12 kHz. It was found that if a causal, low Q, dichotic all-pass section introduces a group delay at 0 Hz larger than 30 µs it is audible. This threshold for the perceived delay can be applied to HRTFs since the all-pass component in an HRTF is composed of all-pass sections. The HRTFs of 40 people measured from 97 directions [3] was analyzed and the group delays of the all-pass components determined. It was found that the group delays are approximately constant up to 1.5 kHz and are never more than 30 µs different from the 0 Hz value. Therefore, any value of the interaural group delay difference of the excess phase components in this frequency range can be used to determine the ITD.

As an example, the decomposition of a pair of HRTFs into its minimum phase and all-pass components is shown in Figure 1a. Figure 1b shows the phases of the excess phase components and the corresponding group delays of the HRTFs in Figure 1a. In order to obtain a constant group delay at low frequencies from which the ITD can be determined the HRTFs have to be correct at low frequencies and in particular the 0 Hz value should be unity.

The first part of this paper addresses the issue of modeling the ITD in order to approximate that of people. In the second part different methods for calculating the ITD to be used with the minimum phase components of HRTFs are described. Thereafter, the ITDs determined with the different models and methods are shown and an error larger than 30 µs is considered audible.

In this work a polar co-ordinate system is used with poles above and below the head. Horizontal planes are indexed by the azimuth angle, θ, where 0 ° is in front, 90 ° is on the left, -90 ° is on the right and 180 ° is behind the head. Elevation angles, ϕ, are relative to the horizontal plane, i.e. 0 ° elevation is the horizontal plane, 90 ° is above and -90 ° is below the head.

1 Approximating the ITDs of humans

ITDs were determined from HRTFs as the IGD_0 of the excess phase components for 70 people, a rigid sphere and a rigid ellipsoid. Furthermore, HRTF measurements with 2 ° spatial resolution were made on an artificial head to show the fine structure of the ITD. ITDs were also calculated from formulas that are extensions of a formula proposed by Woodworth and Schlosberg.

1.1 HRTFs of 70 people

HRTFs were measured at the entrances to the blocked ear canals of 40 standing people. The measurement procedure and HRTFs are presented in [3]. The same procedure was used to measure the HRTFs of 30 sitting people. The directional resolution in azimuth and elevation was 22.5 °. For every direction the mean ITD across the 70 people was determined.

1.2 HRTFs of the artificial head VALDEMAR

The artificial head VALDEMAR was developed at the Acoustics Laboratory at Aalborg University. HRTFs were measured a the entrances to the blocked ear canals with 2 ° directional resolution. Measurements of the HRTFs were made through 360 ° on planes cutting the sphere. They are the horizontal plane (dividing top and bottom), frontal plane (dividing front and back), median plane (dividing left and right) and 45 ° elevation plane (a horizontal plane). The magnitudes of these HRTFs are presented in Christensen et al. [4].

1.3 HRTFs of a sphere

An analytical expression for determining the scattered sound field around a rigid sphere due to a plane wave was published by Rayleigh [5] and is clearly described in Kirkeby and Nelson [6]. Since the method is computationally expensive a numerical solution was proposed by Brown and Duda [7] that uses less processing power. This numerical solution was used to calculate HRTFs of a rigid sphere. The radius of the sphere was 82 mm and the 'ears' were diametrically disposed on the sides of the head.

1.4 HRTFs of an ellipsoid

An analytical expression for the scattering of sound around an ellipsoid is not found in the literature. A numerical solution for calculating the ITD for an ellipsoidal head model is presented by Duda et al. [8]. In this work, however, the ITD was determined from HRTFs calculated numerically by Kahana [9] using the direct method of boundary element modeling (BEM) and the principle of reciprocity. The dimensions of the ellipsoid were found by stretching the axes of a sphere to match the dimensions of the Cortex Electronic MK1 artificial head. The radii in the 3 cartesian co-ordinate directions are rx = 96 mm (front/back), ry = 79 mm (left/right) and rz = 116 mm (up/down). The 'ears' were slightly behind (14.2 mm) and slightly below (5.7 mm) the sides of the head.

1.5 Extended Woodworth/Schlosberg formula

A formula is given by Woodworth and Schlosberg [10] to calculate the ITD of a rigid sphere for diametrically disposed ears. The formula takes account of the low frequency diffraction of a plane wave around the sphere. In the horizontal plane:

$$\mathrm{ITD} = \frac{a}{c}(\sin\theta + \theta),$$

where, a is the radius of the sphere, c is the speed of sound and θ is the azimuth angle in radians. The horizontal plane formula has been extended by Larcher and Jot [11] to include elevation:

$$\mathrm{ITD} = \frac{a}{c}\left[\arcsin(\cos\phi\sin\theta) + \cos\phi\sin\theta\right], \qquad \text{(Formula I)}$$

where ϕ is the elevation angle in radians. This formula yields the same ITD for all planes through the ears and therefore also for the horizontal and frontal planes. This formula will be referred to as 'Formula I' in the following text. Another extension of the Woodworth/Schlosberg formula was presented by Savioja et al. [12] on the bases that the ITD fits better to their data:

$$\mathrm{ITD} = \frac{a}{c}(\sin\theta + \theta)\cos\phi, \qquad \text{(Formula II)}$$

In the following text this formula will be referred to as 'Formula II'. In all cases the radius of the sphere was 82 mm and a sound speed of 340 m/s was assumed.

2 Methods for calculating the ITD

Binaural synthesis is commonly implemented with minimum phase HRTF filters and a pure delay as ITD. In the literature several methods are proposed for determining this ITD. These methods can give very different results and psychoacoustic listening experiments invariably find some detectability between the measured HRTFs and their minimum phase representations due to an inappropriate ITD. First of all procedures for determining the IGD_0 of the excess phase components are described. Thereafter, 3 other methods for determining the ITD that are in common use are reviewed.

2.1 Group delay of the excess phase components evaluated at 0 Hz

There are several ways of determining the IGD_0 of the excess phase components. Here 4 methods will be discussed that have been found to be numerically robust and to give consistent results. The first 3 methods are to be used when the HRTFs are available as impulse responses, whereas the 4th method uses frequency domain representations.

2.1.1 Accumulating the group delay of all-pass sections

For each of the HRTFs in a pair the linear phase component (initial zeros) of the impulse response is determined. For the z-transform of the impulse response the roots (zeros) of the polynomial are determined and for every zero outside the unit circle, in the z-plane, a pole at its reciprocal position is created. Then, every complex conjugate pair of poles and zeros corresponds to a 2nd order section and a real pole and zero correspond to a 1st order section.

For every all-pass section the transfer function polynomial coefficient (usually denoted as B and A) are determined, from which the group delay, $\tau_g(0)$, is calculated. This can be done by multiplying the filter coefficients by a unit ramp before Fourier transformation, which corresponds to differentiation in the frequency domain. The group delays of all all-pass sections are accumulated and added to the linear phase delay to obtain the group delay of the entire excess phase component. From these functions for the two sides the IGD_0 is determined as:

$$\mathrm{IGD}_0 = \mathrm{abs}\left(\tau_g(0)_{\mathrm{left}} - \tau_g(0)_{\mathrm{right}}\right).$$

The procedure described is numerically robust and the group delay of the excess phase component can be calculated correctly over the whole frequency range.

2.1.2 Group delay of the complete all-pass component

Since the previous procedure is computationally intensive a second procedure is described, for determining the group delay from the poles and zeros of the system. From all zeros and poles the transfer function polynomials (Bs and As) are formed that describe the complete all-pass component. The group delay of the complete all-pass component is calculated and the linear delay added to obtain the group delay of the excess phase component. Creating the polynomial is prone to round-off errors when the polynomial order is high (which is the case when the all-pass component contains many all-pass sections). However, as with the first procedure, the complete group delay function can be obtained.

2.1.3 Centroid of impulse response

It can be shown that the group delay at 0 Hz of an impulse response, $\tau_g(0)$, equals its centroid (center of gravity) [13]. Therefore, the IGD_0 of the excess phase for a pair of HRTFs can be calculated very simply. The centroid of the minimum phase component is subtracted from the centroid of the original impulse response. The left and right delays calculated in this way are then subtracted to obtain the ITD. This procedure is both fast and simple, especially if the minimum phase components that should be used with this ITD are already calculated. However the procedure cannot be used if the 0 Hz group delay is incorrect e.g. due to high-pass filtering of the HRTFs.

2.1.4 Gradient of the phase

In some cases the HRTFs may be available in the frequency domain in such a way that it is difficult to construct impulse responses without influencing the low frequency group delay. In this procedure the unwrapped phase is determined for each of the HRTFs in a pair. The unwrapped phase of the minimum phase component is subtracted from it to obtain the unwrapped phase of the excess phase component. The derivative (gradient) of the phase with respect to frequency is the group delay, $\tau_g(f)$. As before the IGD_0 of the excess phase components is the absolute difference between $\tau_g(0)_{\mathrm{left}}$ and $\tau_g(0)_{\mathrm{right}}$.

2.2 Leading edge detection

Another method for finding the ITD was described by Sandvad and Hammershøi [14] who conducted a listening experiment with minimum phase HRTFs. The initial part of the HRTF impulse response is considered to consist of zeros after which the actual filter taps start. Since the initial values in a measured impulse response is not identically zeros the first relevant sample has to be identified. This is done by finding the sample where the impulse response for the first time exceeds 10 % (or 5 %) of its maximum value. The sample number found for the left and right HRTF and subtracted to obtain the ITD. With this method the leading edge (10 % point) of the impulse response can be determined within a sample interval. In this work, therefore, the impulse responses are upsampled 10 times to enable a 10 times more accurate edge detection.

2.3 Linear curve fitting

Jot et al. [15] described a method for determining the ITD to apply to the minimum phase functions. The delay for each HRTF is estimated by fitting a linear curve to the phase of the excess-phase component between 1 kHz and 5 kHz. The delays for left and right are then subtracted to obtain the ITD. This method is referred to by Huopaniemi and Smith [16], but a frequency range of 500 Hz to 2 kHz is suggested.

2.4 Maximum of the interaural cross-correlation

Kistler and Wightman [17] presented a model of HRTFs based on principle component analysis, which assumes that the HRTFs are minimum phase. The ITD is obtained by cross-correlating the impulse responses of a pair of HRTFs and finding the maximum in the cross correlation function. As with leading edge detection the impulse responses can be upsampled 10 times to obtain a better estimate of the maximum point (as is done in this work).

3 Results and Discussion

3.1 Approximating the ITDs of humans

The mean ITD of 70 people is shown in the horizontal, frontal, 45 ° elevation and -45 ° elevation planes. The data is represented by dots since the directional resolution that was used for measuring was rather low (22.5 °). It is apparent that the ITD is symmetrical with respect to the median plane, but not with respect to the horizontal and frontal planes.

3.1.1 Horizontal plane

In Figure 2a the ITD in the horizontal plane is given for the artificial head VALDEMAR. The ITD is very comparable to the people's at those angles where the HRTFs were measured on the people. It is therefore interesting to inspect the ITD of VALDEMAR for directions between those for which the people were measured. It is seen, for example, that the ITDs of humans would be underestimated if they were linearly interpolated between the azimuth angles ±67.5 ° to ±90 ° or ±90 ° to ±112.5 °.

Figure 2b shows the ITD calculated from the HRTFs of a rigid sphere and ellipsoid respectively, with respect to those of the 70 people. The ITD of the sphere fits the data of the 70 people remarkably well in the horizontal plane. However, when compared to VALDEMAR the sphere will underestimate the ITD in the ranges ±67.5 ° to ±90 ° and ±90 ° to ±112.5 °. The ellipsoid's ITD is largest at the ±80 ° directions, which is consistent with the fact that the 'ears' were positioned slightly behind the head. It may be argued that even though this position corresponds approximately to the position of the ear canal entrances of people, it is not sufficient to describe the ITD.

Since people have pinnae the ITD is underestimated for directions behind the head and overestimated for directions in front. So, in terms of the horizontal plane, it seems more reasonable to place the ears directly on the side of the head (or even very slightly to the front) if the ITD is to be estimated from ellipsoid HRTFs.

Figure 2c shows that the ITDs calculated with Formula I and Formula II are identical. Furthermore, the results are similar (negligibly smaller) to that calculated as the IGD_0 of the excess phase components from the sphere's HRTFs (Figure 2b). Therefore, the formulas predict the ITD in the horizontal plane rather well.

3.1.2 Frontal plane

The mean ITD of 70 people and VALDEMAR are shown in Figure 3a. Clearly the ITD is larger for elevation angles above than below the horizontal plane. The ITD in the frontal plane has its maximum value at an elevation of about 10 ° above the horizontal plane. The ITDs of the people and the artificial head do not coincide for elevation angles of -67.5 °. This may be ascribed to the fact that although VALDEMAR has a torso it has no legs and was therefore supported on a stand.

Figure 3b shows that the ellipsoid HRTFs predict the ITD better than the sphere HRTFs for positive elevation angles in the frontal plane. One may argue that this would have been even more so if the ears were positioned even lower on the ellipsoid. The ITD from the sphere HRTFs, however, follows that for the 70 people well below the horizontal plane, except for the -67.5 ° elevation.

In the frontal plane the two ITD formulas give different results, as seen in Figure 3c. Formula I gives results as from the sphere HRTFs (Figure 3b). Formula II fits the data better than Formula I for elevation angles above the horizontal plane, although below the horizontal plane Formula II very much overestimates the ITD.

3.1.3 45 ° elevation plane

Figure 4a shows that in the 45 ° elevation plane (as for the horizontal and frontal planes) the ITD of VALDEMAR fits that of the 70 people quite well. In this plane VALDEMAR's ITD is a very smooth function of azimuth angle.

In Figure 4b ITDs from the sphere HRTFs and the ellipsoid HRTFs are compared. As in the horizontal plane (Figure 2b) the ellipsoid ITD is slightly larger in the front compared to the back, due to the placement of the ears. ITDs for the sphere and the ellipsoid are too small behind the head due to the fact that pinnae were not modeled.

In Figure 4c a similar result is seen for Formula I as for the sphere HRTFs (Figure 4b). For the 45 ° elevation plane Formula I generally underestimates the ITD. Formula II may over- or underestimate the ITD, but generally shows results that are closer to the mean ITD measured on the 70 people.

3.1.4 -45 ° elevation plane

In Figures 5a and 5b the mean ITD of 70 people can be seen in the -45 ° elevation plane. The ITD is not symmetrical with respect to the frontal plane as the ITD in front is very different from that behind the head. Unfortunately ITDs with 2 ° angular resolution could not be calculated for VALDEMAR since HRTFs for the -45 ° elevation plane were not available.

Figure 5a shows that the HRTFs of both the sphere and ellipsoid estimate the mean ITD of 70 people rather poorly in the -45 ° elevation plane for some directions (notably ±67.5 ° and ±112.5 °).

In the -45 ° elevation plane Formula I makes a reasonable estimation of the ITD for some directions behind the head, although it performs poor for frontal directions (Figure 5b). Formula II may over or underestimate the ITD and as seen in the other planes both formulas are unable to describe the complexity of the ITD with sufficient accuracy. However, for all planes the ITD calculated by Formula I is similar (negligibly smaller) to that calculated as the IGD_0 of the excess phase components from the sphere HRTFs. Therefore the ITD of a sphere can be calculated very simply using this formula.

3.2 Methods for calculating the ITD

In Figures 6a to 6d the ITD of the artificial head VALDEMAR is shown for the horizontal plane. This ITD, calculated as the IGD_0 of the excess phase components, is used as reference to which the ITDs determined with other methods should be compared. It is seen that all methods fail to predict the ITD correctly in the 90 ° to 110° azimuth range.

3.2.1 Leading edge detection

In Figure 6a the ITD calculated by using the method of leading edge detecting is compared to the reference. The method is implemented by determining the first sample that is above 10 % of the maximum in the impulse response that has been upsampled 10 times from 48 kHz. The ITD is very well approximated in the horizontal plane with exception of the 90 ° to 110 ° azimuth range where it underestimates the ITD.

In an impulse response the leading zeros constitute the linear phase component. The leading edge method account for this linear phase component, but is not able to take the low frequency group delay introduced by the all-pass components into account. Therefore the errors are largest for those directions where the IGD_0 of the all-pass components is largest. Although the method of leading edge detection is not sufficient to calculate the ITD, it can be used to determine the linear phase components to which the IGD_0 of the all-pass components is added to obtain the IGD_0 of the excess phase components.

3.2.2 Linear curve fitting

In a frequency range where the phase is a linear function of frequency the group delay is constant. Therefore linear curve fitting on the phase is equivalent to calculating the mean of the group delay over the specified frequency range. Figures 6b and 6c show the ITD calculated in this way, by using the 500 Hz - 2 kHz and 1 kHz - 5 kHz frequency ranges respectively. In both case the ITD is overestimated in the 90 ° to 110 ° region.

The results using this method is easily understood by inspecting the group delay of the excess phase component (e.g. Figure 1b). The interaural group delay function of the excess phase components become increasingly complicated as frequency increases. Therefore the results of this method depend on the frequency range chosen for calculating the ITD. Since the phase is a linear function of frequency for frequencies no higher than 1.5 kHz (as described in the introduction), frequencies above 1.5 kHz should not be used for the ITD calculation.

3.2.3 Maximum of the interaural cross-correlation

The method of determining the ITD as the maximum of the interaural cross-correlation of a pair of HRTFs is implemented here by upsampling the impulse responses 10 times (from 48 kHz). In Figure 6d it is seen that this method overestimates the ITD (by more than 30 μs in most cases) very much. Cross-correlation can however be used to find the correct ITD. Cross-correlate the left and right HRTFs with their respective minimum phase components. Then calculate the centroid (not the maximum) of the cross-correlation functions. Subtracting the cross correlation centroids from each other gives the ITD which is identical to the IGD_0 of the excess phase components.

4 Conclusions

In this paper the ITD to be used with the minimum phase components of HRTFs was discussed. The ITD was calculated as the interaural group delay difference evaluated at 0 Hz, IGD_0, of the excess phase components. It was seen that the mean ITD of 70 people is symmetrical with respect to the median plane (left/right), but not with respect to the horizontal (up/down) and frontal (front/back) planes. The ITD of the artificial head VALDEMAR fit that of the people well for directions where measurements were made on the people. Therefore, the ITD of VALDEMAR shown with 2 ° directional resolution is considered a good estimate of the mean ITD of people. Although the ITD is a smooth function of angle it is clear that simple geometrical models (a rigid sphere and a rigid ellipsoid) and formulas based upon them are not able to predict the ITD sufficiently well for all directions.

Methods for determining the low frequency group delay of the excess phase components in HRTFs were described for data available in both the time and frequency domains. A simple and fast procedure was described to determine the IGD_0 of the excess phase components. Other methods for determining the ITD described in the literature were found to be unable to obtain the correct ITD consistently. However, it was shown how every method can be changed to obtain the ITD that corresponds to the IGD_0 of the excess phase components.

5 Acknowledgements

We want to thank Clemen Boje Jensen, Michael Friis Sørensen and Dorte Hammershøi who contributed to the people's HRTF measurements. Thanks to M.Sc. graduate students Bjarke Pihl Bovbjerg and Jacob Florian Randbæk who measured the HRTFs of VALDEMAR. Sincere thanks to Yuvi Kahana (ISVR, University of Southampton) who provided the numerically modeled HRTFs of the ellipsoid. This work was funded by the Danish National Center for IT Research.

6 References

1 J. Plogsties, P. J. Minnaar, S. K. Olesen, F. Christensen, H. Møller, "Audibility of all-pass components in head-related transfer functions", *Presented at the 108th Convention of the Audio Engineering Society*, Paris, France, February 2000.

2 P. J. Minnaar, F. Christensen, H. Møller, S. K. Olesen, J. Plogsties, "Audibility of all-pass components in binaural synthesis", *Presented at the 106th Convention of the Audio Engineering Society*, preprint 4911, Munich, Germany, May 1999.

3 H. Møller, M. F. Sørensen, D. Hammershøi, C. B. Jensen, "Head-related transfer functions of human subjects", *J. Audio Eng. Soc.*, Vol. 43, No. 5, pp. 300-321, May 1995.

4 F. Christensen, H. Møller, P. J. Minnaar, J. Plogsties, S. K. Olesen, "Interpolation between head-related transfer functions measured with low directional resolution", *Presented at the 107th Convention of the Audio Engineering Society*, New York, USA, September 1999.

5 J. W. S. Rayleigh, "The theory of sound", 2nd rev. ed. Vol. 2, Dover, New York, 1945.

6 O. Kirkeby, P. A. Nelson, "Local sound field reproduction using two closely spaced loudspeakers", *J. Acoust. Soc. Am.*, Vol. 104, pp. 1973-1981, October 1998.

7 C. P. Brown, R. O. Duda, "A structural model for binaural sound synthesis", *IEEE Transactions on Speech and Audio Processing*, Vol. 6, No. 5, September 1998.

8 R. O. Duda, C. Avendano, V. R. Algazi, "An adaptable ellipsoidal head model for the interaural time difference", *1999 IEEE International Conference on Acoustics, Speech, and Signal Processing*, Proceedings Vol. 2 , pp. 965-968, March 1999.

9 Y. Kahana, P. A. Nelson, "Numerical modeling of the transfer functions of a dummy-head and of the external ear", *Presented at the 16th International Conference of the Audio Engineering*, Rovaniemi, Finland, April 1999.

10 R. S. Woodworth, G. Schlosberg, "Experimental psychology", *Holt, Rinehard and Winston, New York*, pp. 349-361, 1962.

11 V. Larcher, J. M. Jot, "Techniques d'interpolation de filteres audionumériques: Application à la reproduction spatiale des sons sur écouteurs", *Presented at the Congrès Français d'Acoustique*, Marseille, France, April 1999.

12 L. Savioja, J. Huopaniemi, T. Lokki, R. Väänänen, "Creating interactive virtual acoustic environments", *J. Audio Eng. Soc.*, Vol. 47, No. 9, pp. 675-705, September 1999.

13 V. C. Georgopoulos, D. Preis, "A comparison of computational methods for instantaneous frequency and group delay of discrete-time signals", *J. Audio Eng. Soc.*, Vol. 46, No. 3, pp. 152-163, March 1998.

14 J. Sandvad, D. Hammershøi, "Binaural auralization. Comparison of FIR and IIR Filter representation of HIRs", *Presented at the 96th Convention of the Audio Engineering Society*, Amsterdam, The Netherlands, February 1994.

15 J. M. Jot, V. Larcher, O. Warusfel, "Digital signal processing issues in the context of binaural and transaural stereophony", *Presented at the 98th Convention of the Audio Engineering Society*, Paris, France, February 1995.

16 J. Huopaniemi, J. O. Smith, "Spectral and time-domain preprocessing and the choice of modeling error criteria for binaural digital filters", *Presented at the 16th International Conference of the Audio Engineering*, Rovaniemi, Finland, April 1999.

17 D. J. Kistler, F.L. Wightman, "A model of head-related transfer functions based on principal components analysis and minimum-phase reconstruction", *J. Acoust. Soc. Am.*, Vol. 91, pp. 1637-1647, 1992.

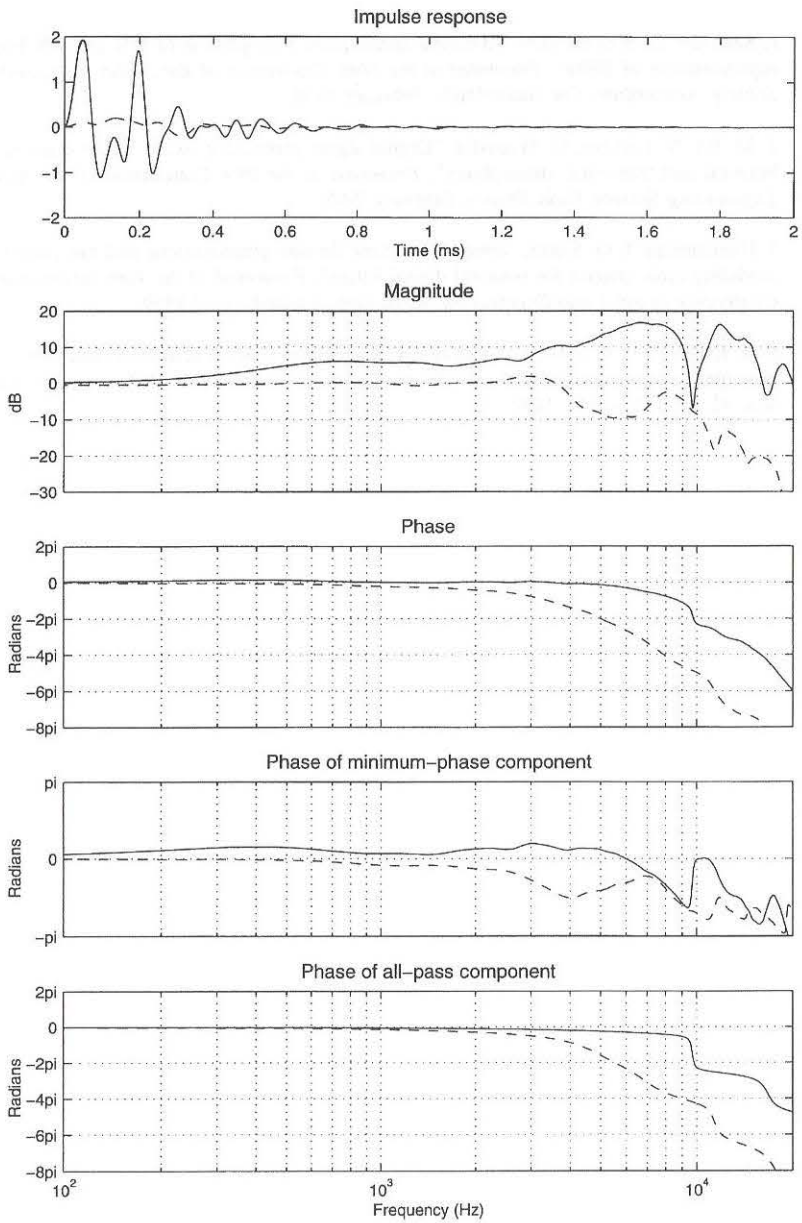

Figure 1a A set of HRTFs with 90 ° azimuth and 0 ° elevation without the initial delay (linear phase component) - decomposed into minimum phase and all-pass components. Ipsilateral (solid line), contralateral (dashed line).

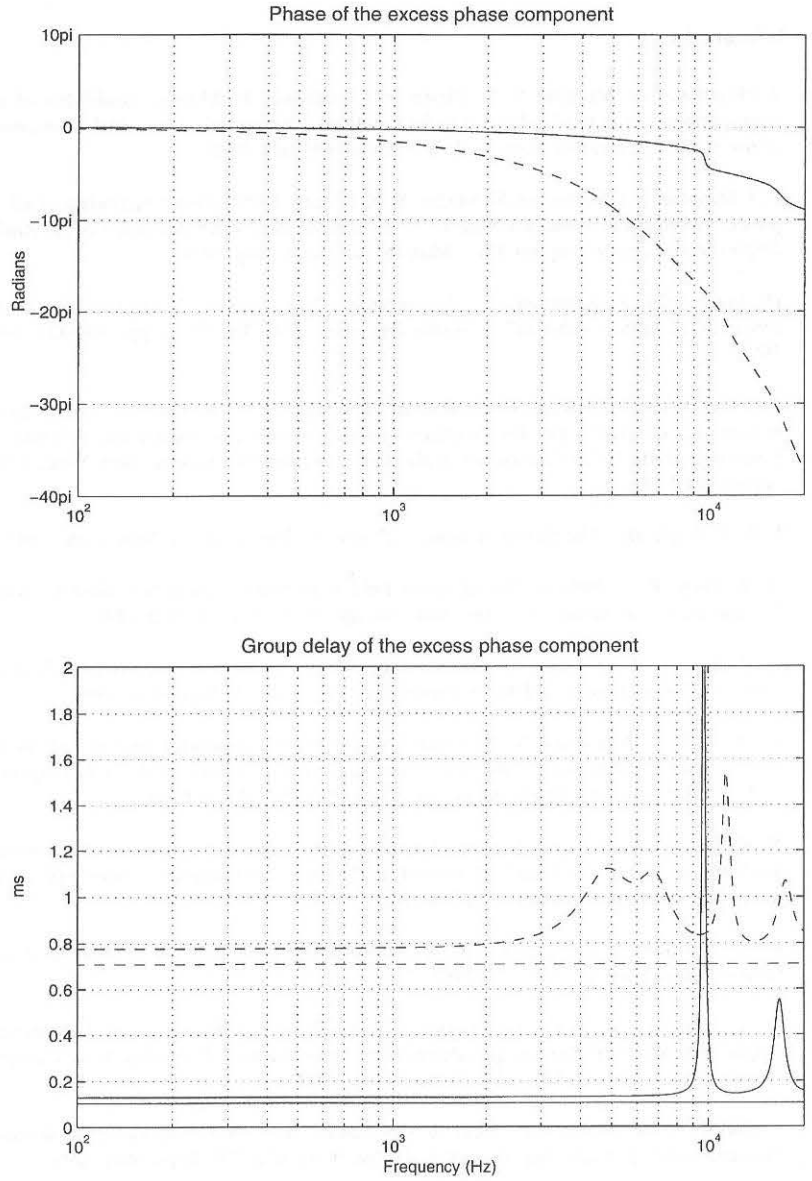

Figure 1b The HRTFs in Figure 1 (including the initial delay) - phase of the excess phase components and group delay of the excess phase components. The lines of constant group delay indicate the linear phase components.

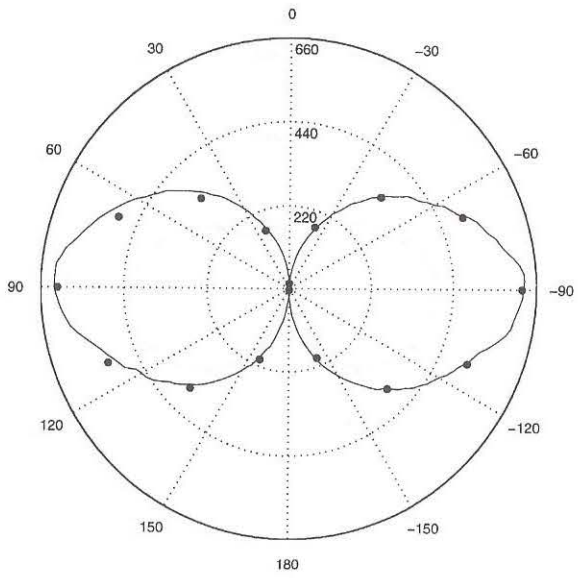

Figure 2a ITDs in the horizontal plane: Mean of 70 people (dots) and VALDEMAR (solid line). The ITDs are given in µs, 0 ° azimuth is in front, 90 ° is left, -90 ° is right and 180 ° is behind the head.

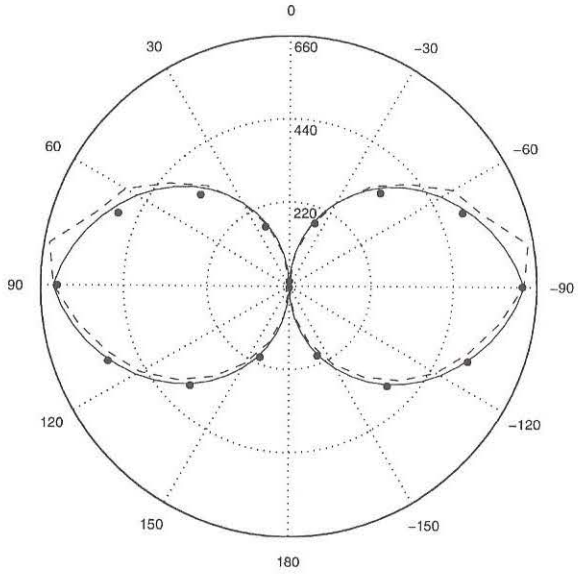

Figure 2b ITDs in the horizontal plane: Mean of 70 people (dots), sphere HRTFs (solid line) and ellipsoid HRTFs (dashed line).

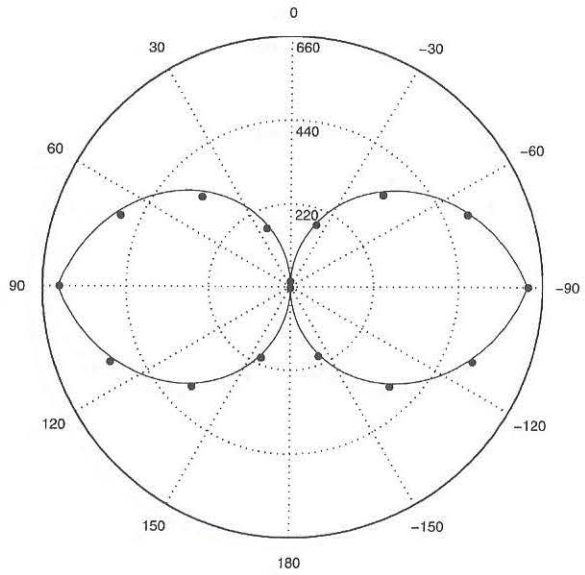

Figure 2c ITDs in the horizontal plane: Mean of 70 people (dots), Formula I and Formula II (solid line).

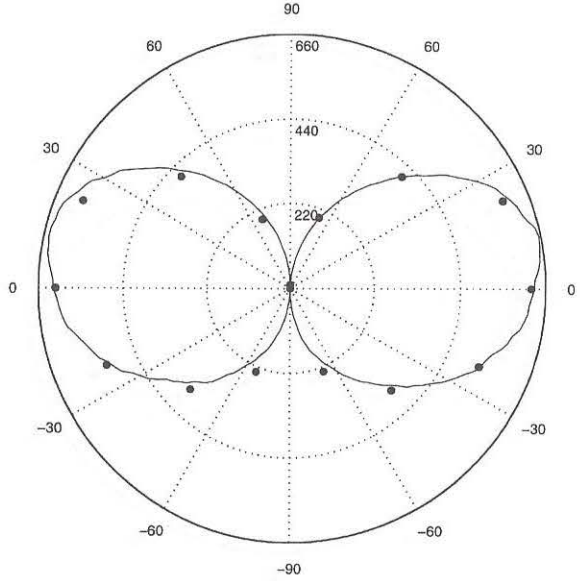

Figure 3a ITDs in the frontal plane: Mean of 70 people (dots) and VALDEMAR (solid line). The ITDs are given in µs, 90 ° elevation is above, -90 ° is below and 0 ° is directly left and right of the head.

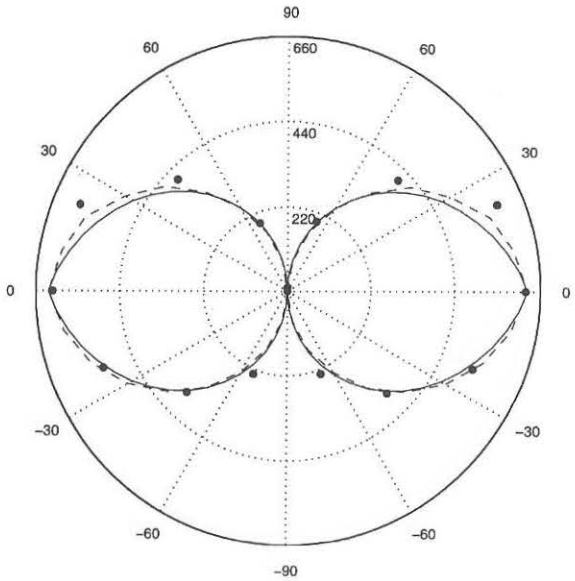

Figure 3b ITDs in the frontal plane: Mean of 70 people (dots), sphere HRTFs (solid line) and ellipsoid HRTFs (dashed line).

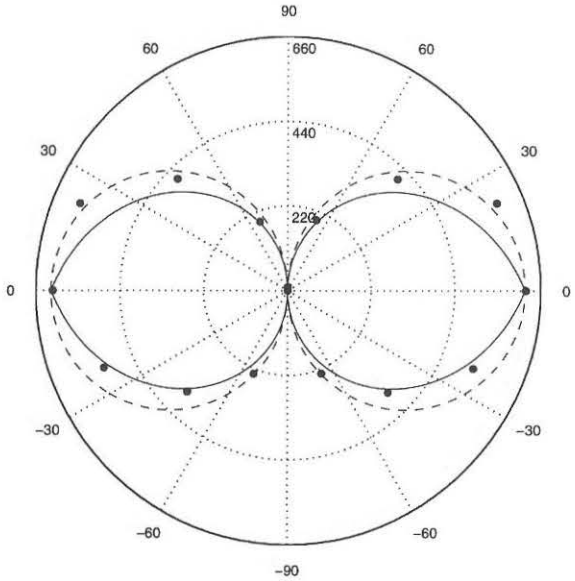

Figure 3c ITDs in the frontal plane: Mean of 70 people (dots), Formula I (solid line) and Formula II (dashed line).

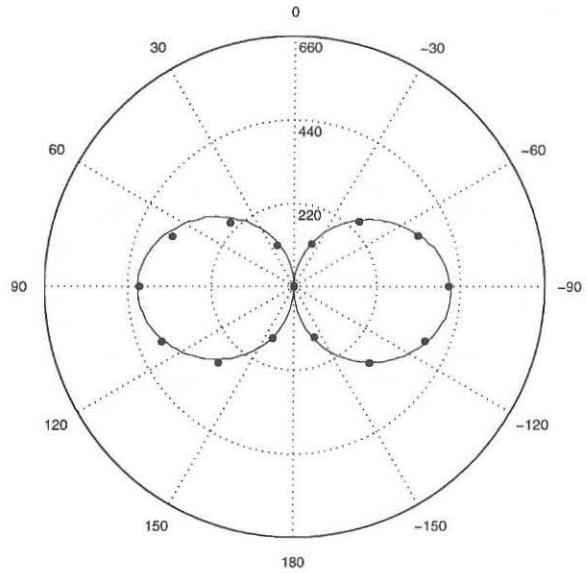

Figure 4a ITDs in the 45° elevation plane: Mean of 70 people (dots) and VALDEMAR (solid line). The ITDs are given in μs, 0 ° azimuth is in front, 90 ° is left, -90 ° is right and 180 ° is behind the head.

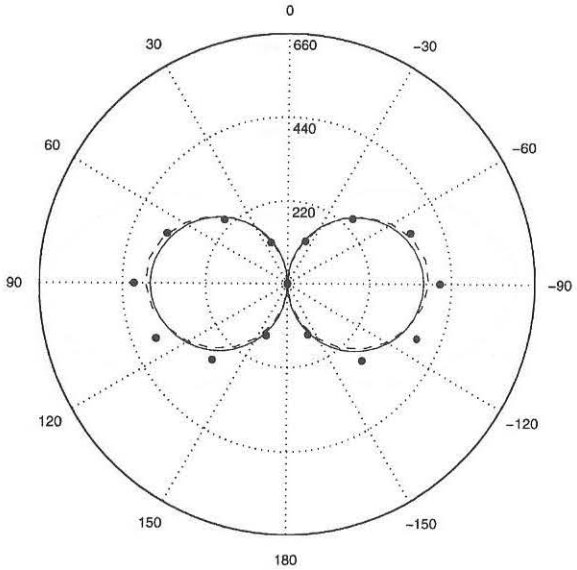

Figure 4b ITDs in the 45 ° elevation plane: Mean of 70 people (dots), sphere HRTFs (solid line) and ellipsoid HRTFs (dashed line).

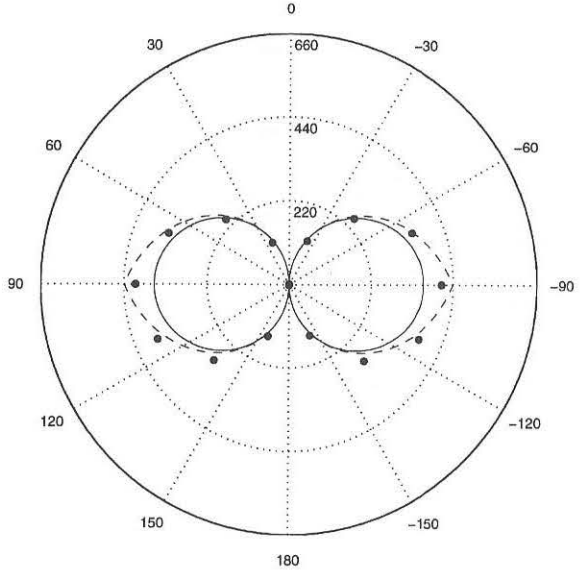

Figure 4c ITDs in the 45 ° elevation plane: Mean of 70 people (dots), Formula I (solid line) and Formula II (dashed line).

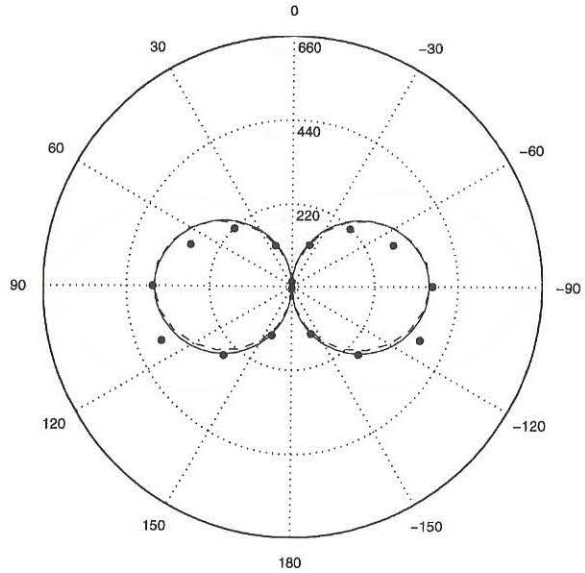

Figure 5a ITDs in the -45 ° elevation plane: Mean of 70 people (dots), sphere HRTFs (solid line) and ellipsoid HRTFs (dashed line). The ITDs are given in μs, 0 ° azimuth is in front, 90 ° is left, -90 ° is right and 180 ° is behind the head.

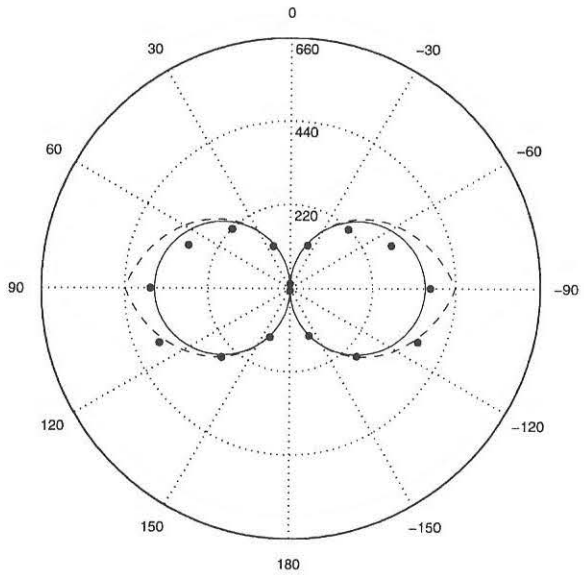

Figure 5b ITDs in the -45 ° elevation plane: Mean of 70 people (dots), Formula I (solid line) and Formula II (dashed line).

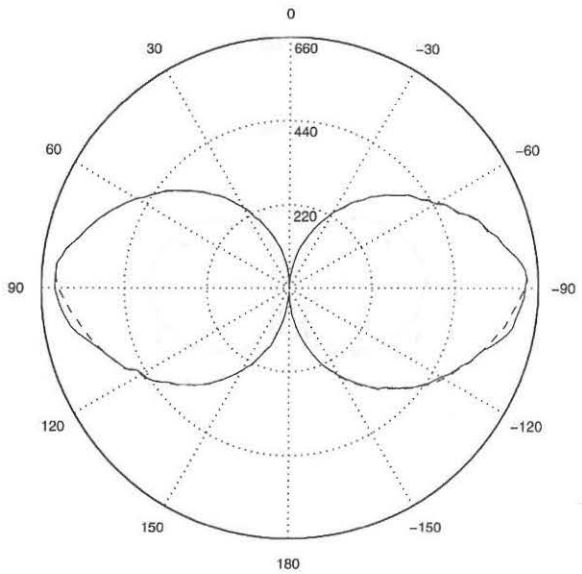

Figure 6a ITDs in the horizontal plane of VALDEMAR: IGD_0 of the excess phase components (solid line), leading edge detection (dashed line).

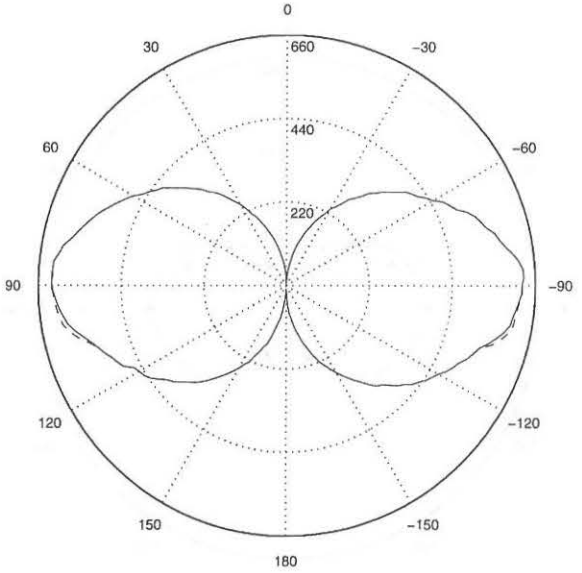

Figure 6b ITDs in the horizontal plane of VALDEMAR: IGD_0 of the excess phase components (solid line), linear curve fitting - 500 Hz to 2 kHz (dashed line).

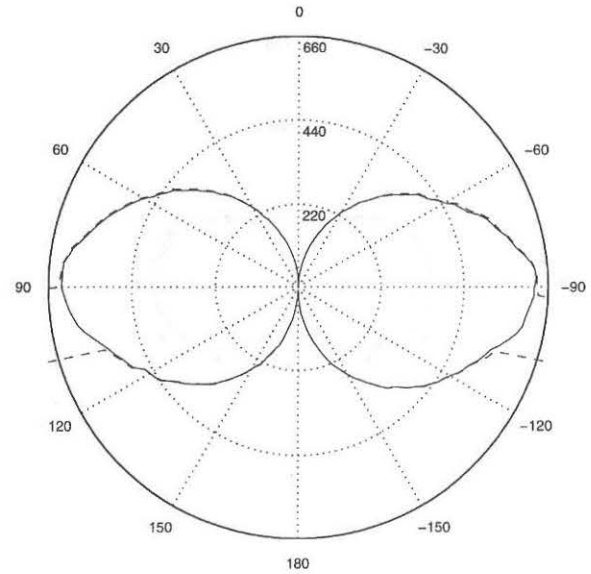

Figure 6c ITDs in the horizontal plane of VALDEMAR: IGD_0 of the excess phase components (solid line), linear curve fitting - 1 kHz to 5 kHz (dashed line).

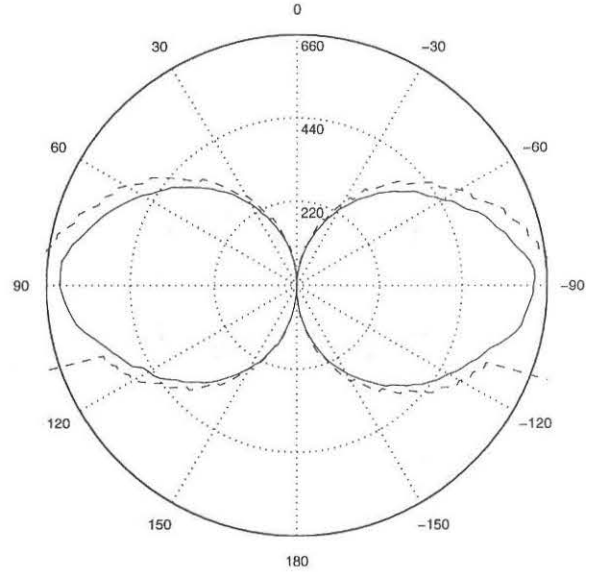

Figure 6d ITDs in the horizontal plane of VALDEMAR: IGD_0 of the excess phase components (solid line), maximum of interaural cross-correlation (dashed line).