A Control Scheme to Improve the Power Quality with the Absence of Dedicated Compensation Devices in Microgrid

Naderipour, A. ; Mohd Zin, A. A. ; Habibuddin, M.H.; Guerrero, Josep M.

Published in:
2015 IEEE Student Conference on Research and Development (SCOReD)

DOI (link to publication from Publisher):
10.1109/SCORED.2015.7449332

Publication date:
2015

Document Version
Early version, also known as pre-print

A Control Scheme to Improve the Power Quality with the Absence of Dedicated Compensation Devices in Microgrid

A. Naderipour[a], A. A. Mohd Zin[b] and M.H. Habibuddin[c]
Faculty of Electrical Engineering, Universiti Teknologi Malaysia (UTM), 81310, Skudai, Malaysia
[a]eng.a.naderipour@ieee.org, [b*]abdullah@fke.utm.my and [c]mhafiz@fke.utm.my

Josep M. Guerrero
Institute of Energy Technology, Aalborg University, Aalborg East DK-9220, Denmark
joz@et.aau.dk
www.microgrids.et.aau.dk

***Abstract*—In this paper, a new method is proposed to control the interface Inverter of distributed generators (DGs) in a microgrid. The objective of this method is to effectively compensate for the harmonic currents at the Point of Common Coupling (PCC) and the MG with the Absence of dedicated compensation devices, such as Active Power Filters (APFs). The proposed control method is composed of the Adjustable Synchronous Reference Frame (ASRF) and the Synchronous Reference Frame (SRF) methods. The ASRF and SRF are proposed to control the power injection and harmonic current compensation, respectively. The merged control methods are proposed for the interface inverter to perform the comprehensive activity of compensating for the harmonics, such as a correction of the system imbalance and the removal of the harmonics. The operation principle of the proposed control method is analyzed in detail, and its effectiveness is validated through simulation results.**

***Keywords*— harmonic current, unbalanced and nonlinear loads, Active power filter, distributed generation (DG), grid inverter control, microgrid**

I. INTRODUCTION

Due to the growing importance of Distributed Generation Sources (DGSs), a large number of power electronics interfaced DG units have been installed in the low voltage power distribution systems. With new and improved technologies at hand, industrial, commercial and residential consumers requirement for power quality of power has increased. DGSs are connected by an interface converter to the utility network or micro-grid. A microgrid can be defined as a part of the grid consisting of prime energy movers, power electronics converters, distributed energy storage systems, and local loads [1]. The total harmonic distortion (THD) is one of the power quality problem in MG and the interface inverters [2-3]. On the other hand, distributed generation sources can be modeled as non-linear loads [4]. An effective method for harmonic suppression is harmonic compensation using passive [5-8], active power [9-11] and hybrid compensator filters [12-13]. Passive filters have the features of low cost and good efficiency and have been widely used to absorb harmonic current of nonlinear loads. They can also provide reactive power to improve the power factor. However, passive filters suffer some drawbacks, such as strong dependence on system impedance, susceptible to source and load resonance and the characteristic variation due to aging . Active filters, which are usually connected to a Point of Common Coupling (PCC), can reduce the harmonics produced in the sources [14]. Alternatively, distribution system power quality enhancement using flexible control of grid-connected DG units. Traditionally, the interface Inverters used in MG behaved as current sources when they are connected to the main grid [15]. The inverter controller should be able to cope with unbalanced utility grid voltages and currents, which are within the range given by the waveform quality requirements of the microgrids. The primary goal of a power-electronic interface converter is to control the power injection. However, compensation for the power quality problem, such as current harmonics, can be achieved through appropriate control strategies. Consequently, the control of DGs must be improved to meet the requirements when connected to the grid [16]. The methods in these studies ([17] and [18]) have been proposed to compensate for current harmonics in grid-connected MG. The proposed current controller is designed in the synchronous reference frame and is composed of a Proportional–Integral (PI) controller and a Repetitive Controller (RC), as discussed in the literature [17]. The other study [18] for the cascaded current and voltage control strategy has been proposed for the interface converter in MG. J. He et al. proposed an enhanced current control approach, which seamlessly integrates system harmonic mitigation capabilities with the primary DG power generation function [19]. A few controllers, namely, PI controllers implemented in the *dq* frame, the resonant controller, the PI controller implemented in the *abc* frame, and the DB predictive controller, were proposed in the literature [20]. In another study [21], the proposed methods were designed for the compensation of voltage imbalance at the DG terminal, while the power quality at the PCC is usually the main concern due to sensitive loads that may be connected. Mohamed Abbes et al. [22] proposed control algorithm for the grid connected NPC three-level converter is proposed. Two

current controllers were designed in order to achieve grid currents control. Performances of the two controllers were compared based on simulation results.

In this study, a new interface inverter control method for harmonic compensation is presented. The proposed control strategy consists of Adjustable Synchronous Reference Frame (ASRF) and Synchronous Reference Frame (SRF) methods. The ASRF is proposed to control power injection to the grid, and the SRF is used for harmonic current compensation. The two control methods can simultaneously compensate for power quality problems at the PCC and microgrid.

II. SYSTEM CONFIGURATION

Figure 1 displays the configuration of the studied system. The passive filters are integrated near the nonlinear load/dispersed generation components in the scheme; for instance, at a substation. Each one of the passive filters can be considered based on the distorted features related to the nonlinear load/dispersed generation component.

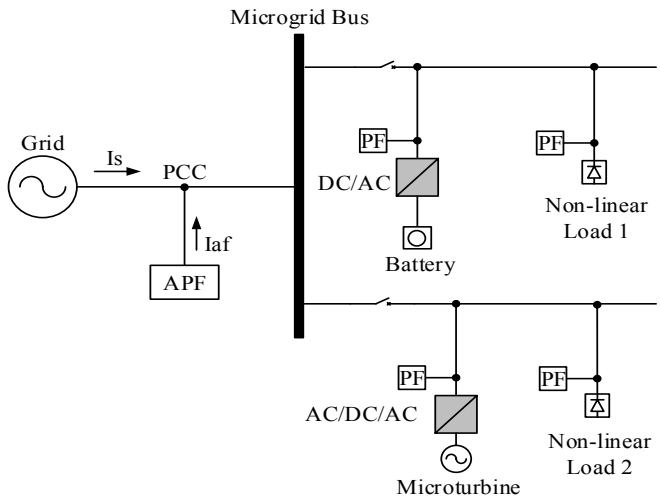

Fig. 1. Studied system configuration with nonlinear loads and dispersed generation sources.

The APF is located at the upstream position to corrects the unbalance of the system and remove the remaining harmonics and is connected at the PCC. The DGs such as Micro-Turbine (MT) and battery connected in to the system through interface converters and diode rectifier loads. Moreover, according to [15], the active filter is in parallel with the passive filters and the load/dispersed generation sources. Further details about the system can be found in Table I.

TABLE I. N-LOAD/DG PARAMETERS AND CONDITIONS FOR THE SYSTEM

Load/DGs	Parameters	Values
Micro-Turbine	Inverter switching frequency	4 kHz
	Inverter resistance	4 Ω
	Inverter capacitance	5 μF
	DC-link voltage	545 V
Battery	Inverter resistance	4 Ω
	Inverter capacitance	5 μF
	DC-link voltage	730 V
Rating of nonlinear load 1	RL 28 kW, 10 kVAr	10A
Rating of nonlinear load 2	Resistor 0.1 Ω	17A

This system contains a sine voltage source along with a DG source consist of MT, as well as two non-linear loads, the first of which is formed by three unbalanced single-phase diode rectifiers and the second of which is formed by one three-phase diode rectifier and acts as a source of harmonic current.

III. FILTER SYSTEM

A. *Passive filter*

Connecting multiple filters in a system can lead to correct impedance specifications of the system. This connection can also affect the filtering of the system, leading to probable resonance in the system [23]. These filters are able to remove the dominant 5th and 7th harmonics. Passive filters have the features of low cost and good efficiency and have been widely used to eliminate the harmonic current of nonlinear loads [15].

B. *Active Filter*

APF has been proved to be a flexible solution to suppress the harmonic currents due to its simplicity and effectiveness [24], [25]. Using active filters is one the most effective methods for compensating harmonics and reactive power caused by non-linear loads. Injecting a harmonic distortion, which is equivalent to a distortion caused by non-linear loads but with an opposite polarity, into the system can lead to correction of the waveform into a sine wave.

IV. CONTROL METHODS

A. *Control method of the active power filter*

The SRF control is also called the dq control [26] and is used to control the APF in this paper. This method uses a reference frame transformation module, $abc \rightarrow dq$, to transform it into a reference frame that rotates synchronously using the transform of the grid current and the voltage waveforms. The Park transformation for an electrical power system analysis was extended. The application of the Park transformation to three generic three-phase quantities supplies their components in $dq0$ coordinates [27]. The Park transformation for electrical power system analysis was extended. The application of the Park transformation to three generic three-phase quantities supplies their components in $dq0$ coordinates [27].

In general, three-phase voltages and currents are transformed into $dq0$ co-ordinates by matrix $[L]$ as follows:

$$\begin{bmatrix} u_d \\ u_q \\ u_0 \end{bmatrix} = [L]\begin{bmatrix} u_A \\ u_B \\ u_C \end{bmatrix} \; and \; \begin{bmatrix} i_d \\ i_q \\ i_0 \end{bmatrix} = [L]\begin{bmatrix} i_A \\ i_B \\ i_C \end{bmatrix} \tag{1}$$

$$[L] = \sqrt{\frac{2}{3}}\begin{bmatrix} \sin\alpha & \sin\left(\alpha - \frac{2\pi}{3}\right) & \sin\left(\alpha + \frac{2\pi}{3}\right) \\ \cos\alpha & \cos\left(\alpha - \frac{2\pi}{3}\right) & \cos\left(\alpha + \frac{2\pi}{3}\right) \\ \frac{1}{\sqrt{2}} & \frac{1}{\sqrt{2}} & \frac{1}{\sqrt{2}} \end{bmatrix} \tag{2}$$

and the three-phase load currents are transformed in $dq0$ co-ordinates by $[L]$

$$\begin{bmatrix} i_{Ld} \\ i_{Lq} \\ i_{L0} \end{bmatrix} = [L]\begin{bmatrix} i_{LA} \\ i_{LB} \\ i_{LC} \end{bmatrix} \tag{3}$$

Therefore, by averaging i_{Ld} and i_{Lq} in domain $[0 - 2\pi]$ results in components i_{Ld} and i_{Lq}, that is

$$\begin{aligned} \bar{i}_{Ld} &= \frac{1}{2\pi}\int_0^{2\pi} i_{Ld} d\ \omega t \\ \bar{i}_{Lq} &= \frac{1}{2\pi}\int_0^{2\pi} i_{Lq} d\ \omega t \end{aligned} \tag{4}$$

where

$$i_{Ld} = \sqrt{\frac{2}{3}}\begin{bmatrix} i_{LA} sin\ \omega t + i_{LB}\sin\left(\omega t - \frac{2\pi}{3}\right) + \\ i_{LC}\sin\left(\omega t + \frac{2\pi}{3}\right) \end{bmatrix} \tag{5}$$

$$i_{Lq} = \sqrt{\frac{2}{3}}\begin{bmatrix} i_{LA}\cos\omega t + i_{LB}\cos\left(\omega t - \frac{2\pi}{3}\right) + \\ i_{LC}\cos\left(\omega t + \frac{2\pi}{3}\right) \end{bmatrix} \tag{6}$$

$$a_{A1}^{(i)} = \sqrt{\frac{2}{3}}\,\bar{i}_d(t) \; and \; b_{A1}^{(i)} = \sqrt{\frac{2}{3}}\,\bar{i}_q(t) \tag{7}$$

The three-phase distorted currents of the three-phase circuit can be represented as follows:

$$i_{LS} = \begin{bmatrix} i_{LSA} \\ i_{LSB} \\ i_{LSC} \end{bmatrix} = \begin{bmatrix} a_{A1}^{(i)}\sin\omega t + b_{A1}^{(i)}\cos\omega t \\ a_{b1}^{(i)}\sin(\omega t - \frac{2\pi}{3}) + b_{b1}^{(i)}\cos(\omega t - \frac{2\pi}{3}) \\ a_{c1}^{(i)}\sin(\omega t + \frac{2\pi}{3}) + b_{c1}^{(i)}\cos(\omega t + \frac{2\pi}{3}) \end{bmatrix} \tag{8}$$

Equation (7) gives the relationship between the dc component of i_{Ld}, i_{Lq} and the coefficients of i_{Ls}, the compensating objective of the APF. Equation (8) is the compensating objective of the APF. In practice, it is importance to find out the optimum compensating objective of APF. The compensating currents provided by APF is:

$$i_{APF} = i_L - i_{LS} \tag{9}$$

Substituting (7) in (8) gives i_{Ls} and substituting i_{Ls} in (9) gives i_{APF} with i_L known. Here, i_{Ls} and i_{APF} are calculated in abc co-ordinates.

The three-phase load currents are transformed in dq0 co-ordinates as follows

$$\begin{bmatrix} u_d \\ u_q \\ u_0 \end{bmatrix} = [L]\begin{bmatrix} u_A \\ u_B \\ u_C \end{bmatrix} \tag{10}$$

Similarly, the averages of u_d and u_q are calculated, and the coefficients of u_A are

$$a_{A1}^{(u)} = \sqrt{\frac{2}{3}}\,\bar{u}_d(t) \; and \; b_{A1}^{(u)} = \sqrt{\frac{2}{3}}\,\bar{u}_q(t) \tag{11}$$

Hence, the following equations can be obtained

$$v_d = \frac{2}{3}\begin{pmatrix} u_A \sin \omega t + u_B \sin(\omega t - \frac{2\pi}{3}) + \\ u_C \sin(\omega t + \frac{2\pi}{3}) \end{pmatrix} \quad (12)$$

$$v_d = \frac{2}{3}\begin{pmatrix} u_A \cos \omega t + u_B \cos(\omega t - \frac{2\pi}{3}) + \\ u_C \cos(\omega t + \frac{2\pi}{3}) \end{pmatrix} \quad (13)$$

$$v_0 = \frac{1}{3}(v_A + v_B + v_C) \quad (14)$$

The control variables then become dc values; consequently, filtering and controlling can be easily achieved.

Figure 2 shows dq current control block diagram of APF.

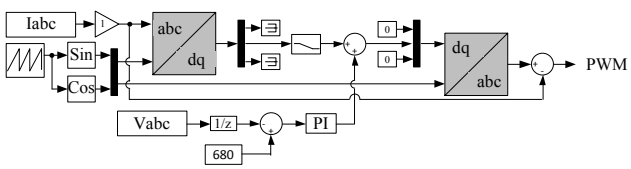

Fig. 2. Block diagram of control system for the active power filter

B. Proposed Methods

An advanced injection power control system with a closed-loop current control is illustrated in Figure 3 where p is active power and q is reactive power, v_{abcDG} is MT voltage at the receiving end, i_{abcDG} is MT current at the receiving end, PI is proportional-integral, i_{abc} is correspondingly the propose control output currents and reference currents, PID is proportional integral derivative. The output currents of the inverter must track the reference currents produced by the current identification block. Consequently a regulation block is required and must be designed. In this work, the inverter is controlled using a PI regulator with a PWM modulator.

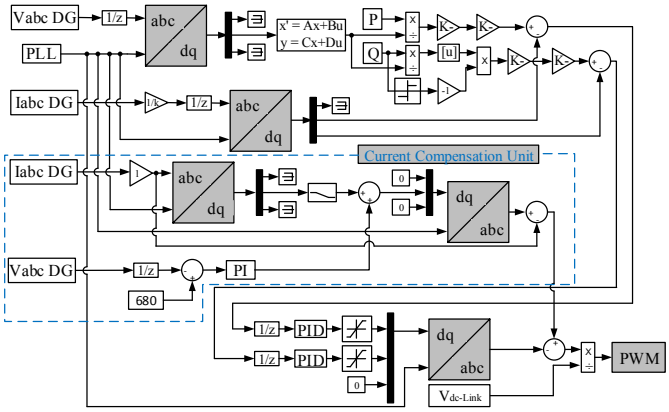

Fig. 3. Block diagram of propose control method

According to Figure 3, can be described as the closed-loop transfer function of dc voltage regulation is given by:

$$\frac{v_{dc}}{v_{dcref}} = \frac{k_p}{c}\frac{s+k_i/k_p}{s^2+(k_p/c)s+ki/c)} \quad (15)$$

where k_p and ki are respectively the proportional and integrator gains of the PI controller.

V. SIMULATION RESULTS

A simulation model of system configuration which is shown in Figure 1 has been built in MATLAB/Simulink to verify the effectiveness of the proposed control scheme. The detailed system parameters are given in Table 1. In order to validate the effectiveness of the proposed control scheme, the simulation results of conventional control are presented for comparison. The resulting system waveforms are shown in Figure 4 without any compensation. The dispersed generation units (i.e., a micro turbine) is connected to the system through power electronic inverter and nonlinear loads (three-phase and three single-phase diode rectifiers), which produce the distorted waveforms. The DG sources and nonlinear loads make the system current nonlinear and unbalanced. The value of total harmonic distortion (THD) is 18.22%.

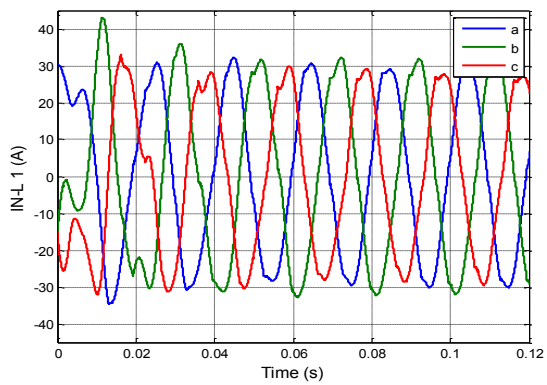

(a)

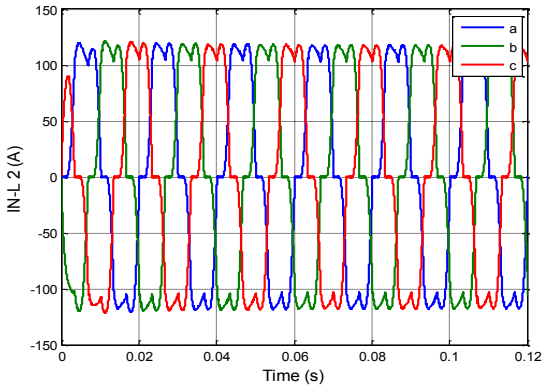

(b)

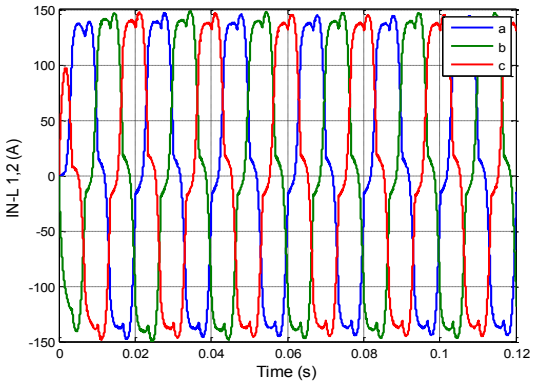

(c)

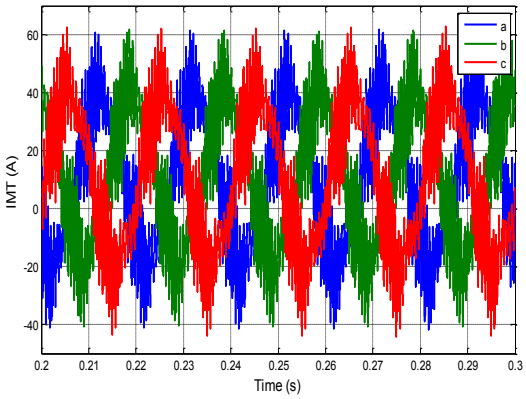

(d)

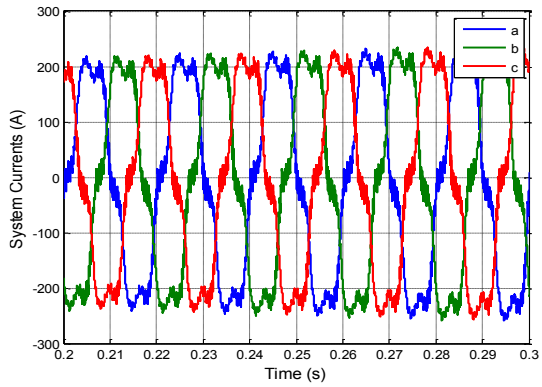

(e)

Fig. 4. System, DG units and nonlinear loads current waveforms without compensation: (a) nonlinear load 1 currents; (b) nonlinear load 2 currents; (c) nonlinear load 1 and 2 currents (together); (d) MT currents; (e) system currents

A system waveform using active and passive filter compensation is shown in Figure 5. At 0.3 seconds, an active filter is connected to the system, and the system harmonics and unbalanced current are compensated. The value of the THD is 4.22%. Consequently, its capability in meeting the IEEE 519-1992 recommended harmonic standard limits.

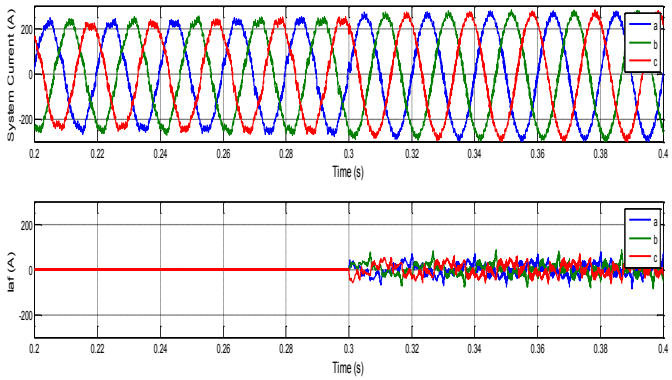

Fig. 5. System and Active power filter current

Figure 6 shows the propose control method can be compensate the current system at the PCC and DGs with the absence of power compensation as well as APF. When the all of the loads and DGs are connected, the THD current without any compensation was 18.22%. THD is reduced to 2.27 % in propose control method.

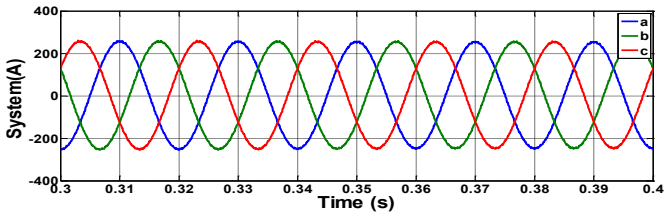

Fig. 6. System and DG unit currents waveforms with the Absence of compensation

VI. Conclusion

This paper proposed a new control strategy for harmonic current compensation for DG interface inverter in a microgrid. The proposed control method consists of the adjustable synchronous reference frame and the synchronous reference frame control methods. When nonlinear, unbalanced loads and DGs are connected to the grid, the proposed strategy significantly and simultaneously improves the THD of the interface inverter for DGs and the grid current. The simulation results verify the feasibility and effectiveness of the newly designed control method for a grid-connected inverter in a microgrid.

ACKNOWLEDGMENT

The authors gratefully acknowledge the financial support by the Ministry of Higher Education (MOHE) Malaysia under the Research University Grant (RUG) Program (Vote Number 10H58), Universiti Teknologi Malaysia (UTM) Malaysia and financial support for this work and Aalborg University, Aalborg East, Denmark, for their cooperation.

REFERENCES

[1] D. G. Photovoltaics and E. Storage, "IEEE Guide for Design, Operation, and Integration of Distributed Resource Island Systems with Electric Power Systems," 2011.

[2] M. Prodanovic and T. C. Green, "High-quality power generation through distributed control of a power park microgrid," Ind. Electron. IEEE Trans., vol. 53, no. 5, pp. 1471–1482, 2006.

[3] N. Golovanov, G. C. Lazaroiu, M. Roscia, and D. Zaninelli, "Power quality assessment in small scale renewable energy sources supplying distribution systems," Energies, vol. 6, no. 2, pp. 634–645, 2013.

[4] A. R. Naderipour, "Voltage and current compensation in dispersed generation systems," in Power Quality Conference (PQC), 2010 First, 2010, pp. 1–4.

[5] J. F. Cline and B. M. Schiffman, "Tunable passive multicouplers employing minimum-loss filters," Microw. Theory Tech. IRE Trans., vol. 7, no. 1, pp. 121–127, 1959.

[6] V. K. Sharma and J. R. P. Gupta, "Power Quality Assessment and Harmonic Comparison of Typical Non-linear Electronic Loads," IETE Tech. Rev., vol. 17, no. 6, pp. 385–390, 2000.

[7] C.-L. Su and C.-J. Hong, "Design of passive harmonic filters to enhance power quality and energy efficiency in ship power systems," in Industrial & Commercial Power Systems Technical Conf (I&CPS), 2013 IEEE/IAS 49th, 2013, pp. 1–8.

[8] P. Karuppanan and K. K. Mahapatra, "Digital non-linear controller-based active power filter for harmonic compensation," IETE J. Res., vol. 59, no. 4, pp. 302–311, 2013.

[9] J. G. Linvill, "RC active filters," Proc. IRE, vol. 42, no. 3, pp. 555–564, 1954.

[10] N. Santos, W. Ricardo, E. R. Cabral da Silva, C. Brandao Jacobina, E. de Moura Fernandes, A. Cunha Oliveira, R. Rocha Matias, F. Guedes Filho, O. M. Almeida, and P. Marinho Santos, "The transformerless single-phase universal active power filter for harmonic and reactive power compensation," Power Electron. IEEE Trans., vol. 29, no. 7, pp. 3563–3572, 2014.

[11] H. M. Zubi, R. W. Dunn, and F. V. P. Robinson, "Comparison of different common passive filter topologies for harmonic mitigation," in Universities Power Engineering Conference (UPEC), 2010 45th International, 2010, pp. 1–6.

[12] S. P. Litran and P. Salmerón, "Reference voltage optimization of a hybrid filter for nonlinear load compensation," Ind. Electron. IEEE Trans., vol. 61, no. 6, pp. 2648–2654, 2014.

[13] A. Naderipour and A. Jalilian, "Designing a Hybrid Compensator to Eliminate Harmonics and Control Reactive Power in Distributed Generation Systems," Int. Rev. Model. Simulations, vol. 4, no. 2, 2011.

[14] S. Zhang, K. Dai, H. Yu, and Y. Kang, "Current Compound Control Strategy for Single-Phase Shunt Active Power Filter," in Power and Energy Engineering Conference (APPEEC), 2010 Asia-Pacific, 2010, pp. 1–4.

[15] J. M. Guerrero, J. C. Vasquez, J. Matas, M. Castilla, and L. G. de Vicuña, "Control strategy for flexible microgrid based on parallel line-interactive UPS systems," Ind. Electron. IEEE Trans., vol. 56, no. 3, pp. 726–736, 2009.

[16] F. Blaabjerg, R. Teodorescu, M. Liserre, and A. V Timbus, "Overview of control and grid synchronization for distributed power generation systems," Ind. Electron. IEEE Trans., vol. 53, no. 5, pp. 1398–1409, 2006.

[17] Q.-N. Trinh and H.-H. Lee, "An Enhanced Grid Current Compensator for Grid-Connected Distributed Generation Under Nonlinear Loads and Grid Voltage Distortions," 2014.

[18] Q.-C. Zhong and T. Hornik, "Cascaded current–voltage control to improve the power quality for a grid-connected inverter with a local load," Ind. Electron. IEEE Trans., vol. 60, no. 4, pp. 1344–1355, 2013.

[19] J. He, Y. W. Li, F. Blaabjerg, and X. Wang, "Active harmonic filtering using current-controlled, grid-connected DG units with closed-loop power control," Power Electron. IEEE Trans., vol. 29, no. 2, pp. 642–653, 2014.

[20] A. Timbus, M. Liserre, R. Teodorescu, P. Rodriguez, and F. Blaabjerg, "Evaluation of current controllers for distributed power generation systems," Power Electron. IEEE Trans., vol. 24, no. 3, pp. 654–664, 2009.

[21] M. Savaghebi, A. Jalilian, J. C. Vasquez, and J. M. Guerrero, "Autonomous voltage unbalance compensation in an islanded droop-controlled microgrid," Ind. Electron. IEEE Trans., vol. 60, no. 4, pp. 1390–1402, 2013.

[22] M. Abbes and J. Belhadj, "New control method of a robust NPC converter for renewable energy sources grid connection," Electr. Power Syst. Res., vol. 88, pp. 52–63, 2012.

[23] J. C. Das, "Passive filters-potentialities and limitations," in Pulp and Paper Industry Technical Conference, 2003. Conference Record of the 2003 Annual, 2003, pp. 187–197.

[24] F. Z. Peng, "Application issues of active power filters," Ind. Appl. Mag. IEEE, vol. 4, no. 5, pp. 21–30, 1998.

[25] H. Akagi, "New trends in active filters for power conditioning," Ind. Appl. IEEE Trans., vol. 32, no. 6, pp. 1312–1322, 1996.

[26] B. Zhang, "The method based on a generalized dq k coordinate transform for current detection of an active power filter and power system," in Power Electronics Specialists Conference, 1999. PESC 99. 30th Annual IEEE, 1999, vol. 1, pp. 242–248.

[27] R. S. Herrera, P. Salmerón, and H. Kim, "Instantaneous reactive power theory applied to active power filter compensation: Different approaches, assessment, and experimental results," Ind. Electron. IEEE Trans., vol. 55, no. 1, pp. 184–196, 2008.