Experimental Investigation of the Motion and Shape of Flexible Objects near a Pump Inlet

Jensen, Anna Lyhne; Abou Ackl, Raja; Gerlach, Stefan; Sørensen, Henrik; Rosendahl, Lasse Aistrup; Thamsen, Paul Uwe

Publication date:
2016

Document Version
Publisher's PDF, also known as Version of record

20th Australasian Fluid Mechanics Conference
Perth, Australia
5-8 December 2016

Experimental Investigation of the Motion and Shape of Flexible Objects near a Pump Inlet

A. L. Jensen[1]∗, R. A. Ackl[2], S. Gerlach[2], H. Sørensen[1], L. Rosendahl[1] and P. U. Thamsen[2]

[1]Department of Energy Technology
Aalborg University, Aalborg DK-9220, Denmark

[2]Department of Fluid System Dynamics
Technische Universität Berlin, Berlin D-10623, Germany

Abstract

Previous investigations of clogging effects in waste water pumps have focused on the impact of pumping contaminated water on the pump performance, as well as the influence of the operating point on the location of clogged material in the pump and in the pumping system. The present work aims to characterise the dynamics of flexible material entering a rotating impeller. Experiments are carried out in a wet pit located in the Department of Fluid System Dynamics in TU Berlin. The wet pit is modified with an acrylic plate placed at the bottom of the pit, enabling visual access to the suction side of the pump. Clean water containing synthetic dusters for housekeeping of size 21 cm × 30 cm are used as artificial waste water with a high degree of contamination. A high speed camera is used to capture the duster motion to identify characteristic movements of the dusters for operating points of 60%, 100% and 120% of the Best Efficiency Point (BEP). Three characteristic movements of the dusters as they enter the pump were found. Furthermore, a very clear correspondence between decrease in pump performance and the amount of visible dusters collected at the leading edge of the impeller was found for 100% and 120% of the BEP. For 60% of the BEP clogging occurred at the tongue and no correlation between visible dusters in the pump inlet and pump performance was observed.

Introduction

Waste water is transported from cities and industrial areas through a pumping system of channels, pressure pipelines and waste water pumping stations. The reliability of this system is essential, since breakdowns are both costly and can result in overflow and pollution. A major challenge in ensuring the reliability of the system is the increase of the content of flexible material with high tensile strength in the waste water. Especially the increasing market of baby-, cosmetic- and toilet wet wipes has led to an increased amount of these objects in the waste water, causing clogging in the waste water pumps. Mitchell et al. (2016) [4] analysed samples of waste water collected from two catchment areas in Berlin to determine the composition of material in waste water and the size of the objects causing clogging. The material was divided into plastics, textiles, papers and wood and leaves. The composition changed significantly from sample to sample, but textiles represented on average 33% of the physical constituents. Focusing on the textile, the wet wipes represented the largest part. In this work Mitchell et al. (2016) [4] also analysed clogging material and found that textile material represented more than 90% of the material found in a clogged pump. Furthermore, it was found by analysing the size of the substances that material with an area around 210 cm^2 corresponding to the size of wet wipes dominated. These results emphasise the severity of the challenges flexible textile materials cause in the waste water pumping system and motivates the present work to investigate the movement of these materials as they enter the pump to improve the understanding of clogging phenomena.

Due to the difficulty of visually accessing pumps in real wastewater pumping stations, and due to obvious hygienic problems involved with working with real waste water, artificial waste water has been used in several experimental studies [5, 6]. These studies use synthetic non-woven dusters of 21 cm × 30 cm of polyester and polypropylene to create artificial waste water, since these dusters have proved to have good mechanical properties to recreate clogging scenarios from real pumping stations. The properties of these dusters were investigated and compared to wet wipes by Katscher et al. (2016) [2]. The tested properties were mass, material, tensile force and tensile strength as well as length, width and thickness. It was found that the dusters were slightly larger than the average wet wipe with a higher tensile strength and less elongation under tensile force. Despite these slight differences the dusters used in previous experimental studies are also used in the present work.

When a pump is clogged with flexible material the performance significantly decreases and ultimately clogging can lead to a complete stop, which requires manual cleaning for the pump to return to normal operation. Korving and Ottenhoff (2008) [3] investigated failure of waste water pumps using statistical methods showing that pump failures are influenced by several phenomena including the composition of the waste water, discontinuous operation, the succession of dry and wet periods, cleaning frequency, pump design and location and wet well design. Focus on the entire system, is also a topic in the work by Höchel et al. 2013 [1], who similarly investigated the influence of the weather, the pump and the pit design on failure events, and found a high variation in the number of failure events per pumping station, a high weather influence and an impact of the inflow direction to the sump. These results underlines the importance of the system around the pump to avoid clogging. Apart from the system design, also the operation of the system influences the occurrence of clogging. Introduction of a control system to handle the pumping stations of Berlin led to an increase in clogging events, which initiated work to understand the correspondence between pump operating point and clogging. Using the presented dusters in a scaled pumping station with a dry installed pump, Thamsen (2009) [6, 7] presented results showing different clogging types depending on the operating point of the pump. Operating points of 40%, 60%, 80%, 100% and 120% of the best efficiency point (BEP) were investigated. The type of clogging changes from being dominated by clogging at the suction sump at 40% of the BEP onto the impeller gap and impeller channel between 60% and 80% of the BEP, changing to domination of clogging in the casing and shroud clearance at 100% and 120% of the BEP. Other identified clogging scenarios include clogging at the impeller inlet and suction pipe.

The results by Thamsen (2009) [6, 7] show different characteristics of clogging occurring in waste water pumps depending on the operating point. To improve the understanding

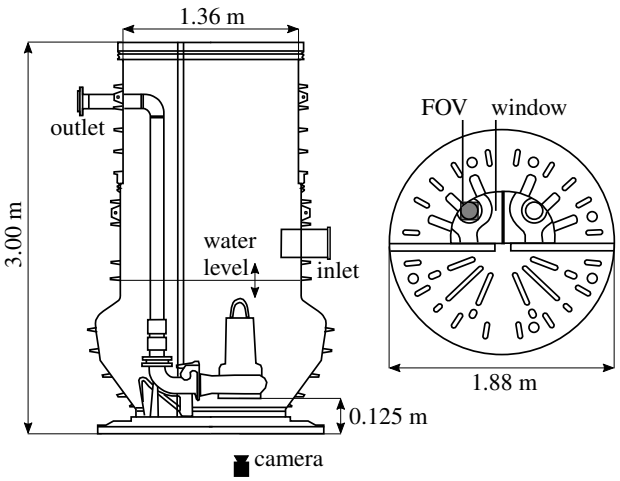

Figure 1: Sketch of the modified wet pit.

of what leads to these different types of clogging, the present work investigates if the difference can be identified at different operating points in the movement and shape of the material before entering the pump. Contrary to the work by Thamsen (2009) this work is carried out in a wet pit pumping station where the pump is placed inside the waste water as opposed to a pumping station with a dry installed pump. The result will provide data for determining initial conditions and validation during development of simulation of clogging effects which is the long term aim of the on-going work.

Method

A wet pit has been modified with a bottom made of acrylic glass, enabling visual access to the suction side of the pump as illustrated in figure 1. The wet pit is placed on a stand, and a camera is placed under the pit. The wet pit is equipped with two pumps, with one pump being tested in the present work. This is a submersible pump with a single vane impeller for application in highly contaminated waste water. The volume flow, the rotational speed of the impeller as well as the current and power consumption is logged during experiments. The pump is run at one of three tested operating points and the pump inlet is recorded with a Basler acA1920-155um fast digital camera as the duster moves into the pump. The Field of View (FOV) of 150 mm $\times$ 150 mm is covering the pump inlet, which is recorded with a frame rate of 160 fps and an exposure time of 1000 μs to capture the motion of the dusters as they enter the impeller. Each picture has a resolution of 1216 $\times$ 1216 pixel corresponding to 0.12 mm/pixel. The impeller rotates with approximately 1400 rpm resulting in a movement of roughly 8 deg during the exposure time and a movement of around 50 deg by the impeller between the images.

To create artificial waste water with high contamination, 175 of the described synthetic dusters are added to the water in the wet pit. The water is pumped in a closed system so the 175 dusters remain in the system. The wet pit is run for up to 45 minutes, until the power consumption reaches 130% of the nominal value due to clogging, or until no further clogging occurs as the dusters get torn apart as they repeatedly pass through the pump. The movement of the dusters is recorded at operating points of 60%, 100% and 120% of the BEP, corresponding to volume flows of 60 m^3/h, 100 m^3/h and 120 m^3/h respectively. The images are analysed and characteristic movements of the dusters are identified. Furthermore, the types of clogging occurring at the different operating points are identified.

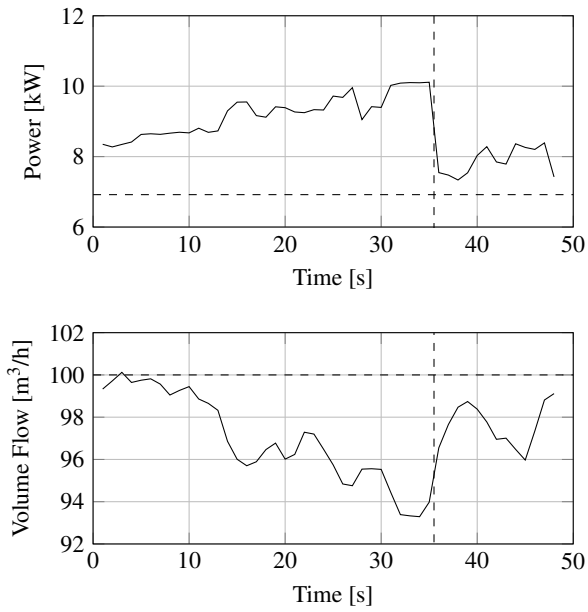

Figure 2: Development of power consumption (top) and volume flow (bottom) during 50 seconds of operation at the BEP.

Results

The results are divided into a discussion of the correspondence between visible dusters in the pump impeller and pump performance as the pump restores normal operation due to self-cleaning, and characterisation of different types of movements as the dusters enter the pump impeller at different pump operating points.

Self-cleaning

For the operating points 100%, and 120% of BEP, there is a very good correspondence between the amount of visible dusters in the pump impeller, the increase in the logged power consumption and the decrease in volume flow. Figure 2 shows the development of power consumption and the volume flow during 50 seconds of pump operation as dusters begin to clog inside the pump. Until around the 35th second the dusters are collected in the pump impeller rather than passing through the pump, and the power consumption increases while the volume flow decreases as the dusters accumulate at the impeller inlet. The horizontal dashed lines in figure 2 represent the nominal power consumption and volume flow respectively. As the power consumption reaches a high value, at one point the visible dusters disappear from the impeller and the power consumption returns to the original state within a rotation of the pump impeller. This point is marked with the vertical dashed line. At the same point there is a significant increase in volume flow towards the original 100 m^3/h. Image sequence 1 in figure 3 shows how the dusters at the impeller inlet disappear within a rotation of the impeller at the point corresponding to the vertical line in figure 2. It is not known if dusters at different places in the pump affects the clogging too, however the moment the dusters in the impeller disappear, the pump returns to normal operation. Several very similar self-cleaning points where continuously observed during pump operation, and the dusters clogged in the impeller did not lead to pump failure.

Duster Motion at the Impeller Inlet

The movement of the dusters at the impeller depends on the operating point, likely due to differences in the flow behavior.

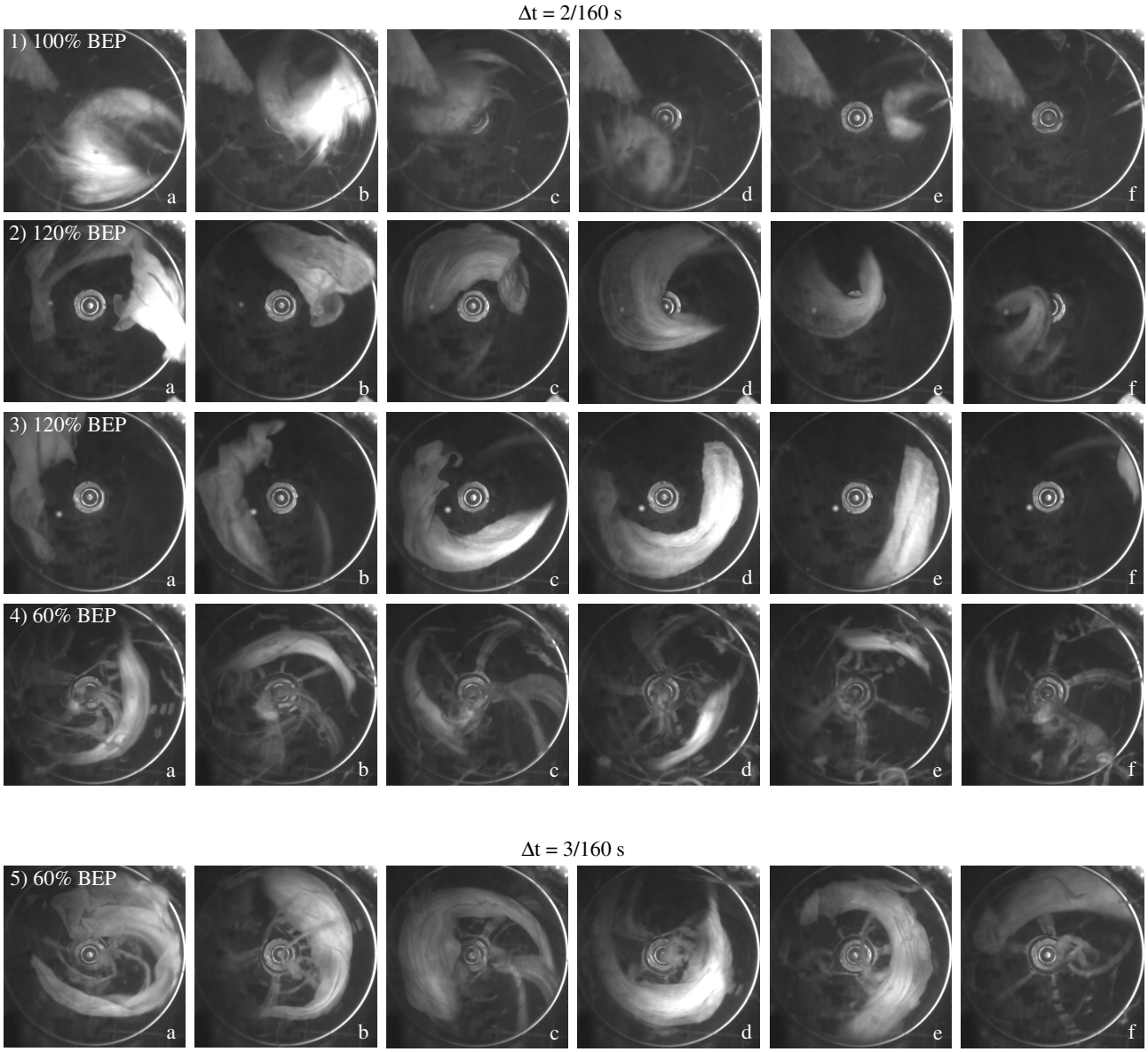

Figure 3: Movement of dusters at the impeller inlet at 1) 100% of BEP, 2-3) 120% of BEP, 4-5) 60% of BEP. In image sequence 1-4 2/160 s passes between the images, while 3/160 s passes between the images in image sequence 5.

In figure 3, image sequences 2-5 illustrate four different occurrences of a single duster entering the counter-clockwisely rotating pump impeller. These four sequences illustrate in total three representative examples of the duster movement and the movement of the majority of the observed single dusters entering the impeller can be categorized into one of the three.

Image sequence 2 and 3 are taken at 120% of BEP with a time step of 2/160 s between the images. In image sequence 2 the duster enters the impeller and gets stuck at the edge of the impeller inlet, the duster is pulled along with the impeller as it rotates, forming a U shape as the part of the duster at the impeller inlet edge moves faster than the part of the duster outside the impeller. In images 2e-2f it is seen how the impeller reaches the last part of the duster and the duster finally passes through the pump. As the duster stays at the impeller inlet, more dusters can accumulate at the pump impeller and the pump will start clogging. However, as illustrated in image sequence 1, the pump has a self-cleaning effect, and at one point the collected dusters will disappear. Comparing image sequence 2 to image sequence 1, which shows dusters at the inlet of the impeller when the pump is severely affected by clogging, the behavior of the dusters are similar and the dusters in the clogged pump also disappears as the part of the dusters outside the impeller is reached by the impeller. Image sequence 3 shows a different case from 120% of the BEP. In this sequence the front part of the duster gets stuck to the impeller inlet, but slides off again and the duster passes through the impeller with the rear part first. At the operating points, 100% and 120% of BEP no clogged dusters were found inside the pump after ending the test.

Image sequences 4 and 5 show dusters at the impeller inlet at an operating point of 60% of BEP which is a heavy part load condition. At this operation point no correspondence between the pump performance and the amount of dusters visible at the impeller inlet was observed. Yet, the pump performance gradually decreased with increased power consumption and a decreased volume flow, while dusters where not visibly clogged at the impeller inlet. In image sequence 4, the duster enters the pump impeller and gets stuck at the inlet edge where it slowly slides into

Figure 4: Clogging in the cavity after operating the pump at a part load of 60% of the BEP.

the pump. This was not observed for operating points closer to the BEP. Image sequence 5 shows a case very similar to image sequence 3, where the front part of the duster is caught by the edge of the impeller inlet (image 5b) and the duster slides off the impeller inlet again. In image 5f the duster is no longer attached to the inlet edge of the impeller and the duster is sucked into the impeller. The phenomenon in image sequence 2 where the duster forms a U shape was rarely observed at 60% of the BEP. As this type of movement of the duster often resulted in accumulation of dusters at the pump impeller, this may contribute to the fact that the duster rarely accumulates at the impeller when operating at 60% of the BEP.

Conclusions

For the pump operating points 100% and 120% of the BEP, a clear correspondence between visible dusters collected at the impeller inlet and the pump performance was observed. As the amount of dusters increases the power consumption increases and the volume flow decreases. At one point the dusters escapes the impeller inlet and at the same time the pump returns to normal operation. It is not clear if dusters at different places in the pump affects the clogging too. However, no dusters where found inside the pump after testing these operating points.

Operating at 120% of the BEP two main types of duster movements into the pump were observed. Either the front of the duster gets stuck at the impeller inlet but slides off again and the duster moves into the pump with the rear part first. Or the duster gets stuck at the impeller inlet where it stays until the impeller inlet catches up with the part of the duster outside the impeller. This type of movement means that the duster stays at the inlet of the impeller for a long time. If more dusters enter the pump in the same way and stays at the inlet of the impeller the pump begins to clog. Operating at 60% of the BEP two main types of duster movement was observed. Similar to operating at 120% of the BEP the front part of the duster could get stuck around the impeller inlet edge but slide off again and the duster would be sucked in from the opposite side. Alternatively, the duster would get stuck at the impeller inlet edge and slowly slide into the pump.

Two types of clogging were identified. Clogging at the tongue when operating in part load and clogging at the impeller inlet at operating points closer to the BEP. The movement of the dusters before entering the pump has not previously been analysed to understand clogging effects. This work will contribute to validation of simulation of clogging phenomena which is the long term aim of the present work.

Acknowledgments

Financial support from Grundfos and Nordic Water Network is gratefully acknowledged.

References

[1] Höchel, K., Thamsen, P.U. and Rauwald, H., Analysing Sewage Handling Problems, *World Pumps*, June 2013.

[2] Katscher. B., Ellmer. K, and Schneider, T., Textilen im Abwasser - Bestandsanalyse und Erstellung eines Lastenheftes für die Zugfestigkeitsprüfung im feuchten Zustand von Feuchttüchern *HTW Berlin, Bachelor thesis*, 2016.

[3] Korving, H. and Ottenhoff, E.C., Analysis of the causes of pump failure and differences of failure characteristics *Water Science & Technology*, 2008, 1271–1276.

[4] Mitchell, R.-L., Gunkel, M., Thamsen, P.U. and Waschnewski J., Investigations into Wastewater Composition Focusing on Nonwoven Wet Wipes, *Conference Singapore*, 2016.

[5] Pöhler, M., Gerlach, S., Höchel, K., Mengdehl, T. and Thamsen, P.U., Linking Efficiency to Functional Performance by a Pump Test Standard for Wastewater Pumps, *Proceedings of the ASME-JSME-KSME Joint Fluids Engineering Conference 2015*, Seoul, Korea, July 2015.

[6] Thamsen, P.U., Cutting Clogging in Wastewater, *World Pumps*, April 2009.

[7] Thamsen, P.U., Tornow, M., Oesterle, M. and Rüdinger, K., Ensure Reliable Wastewater Pumping Research and Experience in the Context of LISA, *Singapore International Water Week*, Singapore 2009.