A Channel Sounder for Massive MIMO and mmWave Channels

Nielsen, Jesper Ødum; Fan, Wei; Eggers, Patrick Claus F.; Pedersen, Gert F.

Published in:
I E E E Communications Magazine

DOI (link to publication from Publisher):
10.1109/MCOM.2018.1800199

Publication date:
2018

Document Version
Accepted author manuscript, peer reviewed version

A Channel Sounder for Massive MIMO and mmWave Channels

Jesper Ødum Nielsen, Wei Fan, Patrick C. F. Eggers, Gert Frølund Pedersen
Antennas, Propagation and mm-Wave Systems, Dept. of Electronic Systems, Technical Faculty of IT and Design, Aalborg University, Denmark

***Abstract*—Both massive multiple-input multiple-output (MIMO) technology and use of frequencies in the range 24–100 GHz are considered essential for upcoming 5G systems. Measurements of the new type of channels are needed, but this is challenging due to the large number of channels in massive MIMO and the short wavelength in the 24–100 GHz channels (so-called mmWave channels). This article describes a sounder system capable of measurements in both types of channels. While the same sounding system supports simultaneous massive MIMO and mmWave channels, the number of channels in each band and in total is in practice limited. For massive MIMO in the 300–6000 MHz band alone, arrays with up to 128 receiver (Rx) elements are possible, receiving from 16 independent mobile transmitter (Tx) antennas, where all channels are measured within 1.3 ms and in a 200 MHz bandwidth. To the authors knowledge, this is the first sounding system with this number of channels and a speed necessary for measuring the dynamic channels in typical application scenarios. For mmWave channels the sounder operates in the range 18–40 GHz. For these bands up to 2 Tx elements and 16 Rx elements can be measured. In addition, the paper describes some measurements in both a massive MIMO setup in an indoor sports arena and a mmWave setup with a handheld device containing a 7-element array.**

I. Introduction

The next generation cellular communication systems, typically referred to as the fifth generation (5G), is currently under intensive research and development in the industry, academia and government organizations. The new 5G cellular systems are envisioned to achieve better performance, e.g., higher data rate, better energy efficiency, and higher reliability than current systems. Of the wide palette of 5G features, millimeter wave (mmWave) communication and large-scale antenna systems at sub-6 GHz, referred to as massive multiple-input multiple-output (MIMO), are regarded as the essential enabling components. With legacy sub-6 GHz cellular bands being generally populated, using spectrum at mmWave frequencies is attractive with several available candidate bands identified for 5G, ranging from about 24 GHz up to 100 GHz, depending of geographical region [1]. These bands are commonly referred to as mmWave.

In massive MIMO systems the number of antenna elements on the base stations is much larger than the number of simultaneously served users, e.g., 64 or 128 elements [2]. This potentially creates channel properties that allow to increase the spectral and energy efficiency.

Understanding the properties of the new type of radio channels is key to the design of 5G systems, and models of the channels are needed for design and development of the new systems and air interfaces. Both modeling and characterization of the channel starts with reliable measurements of channels in the deployment scenarios, as in the METIS project [3].

The main challenge in measuring massive MIMO channels comes from the many links involved. Typically this is solved by creating virtual arrays where a single antenna or smaller array is moved in space during measurements, which are then regarded as the same array. See, e.g., [2], [4] where, respectively, 128 and 256 element arrays are obtained in this way at 2.6 GHz and 3.5 GHz. Such setups are efficient to reveal characteristics of channels in scenarios justifying the absent antenna coupling and the assumption of a static channel. However, to allow investigations of massive MIMO channels including coupling effects of real arrays and the changes seen in typical channels, e.g, being dynamic or involving users, much faster channel measurements are necessary.

Even though typically a smaller number of links are involved, the much shorter wavelengths used for mmWave communication means that measurement speed is equally important. Examples of measurement systems include [5]–[7] operating with center frequencies in the 20, 30, 60, and 70 GHz regions using bandwidths of 0.5–6 GHz and with 1–2 transmitter (Tx) and receiver (Rx) elements. One exception is the 16 Rx channel system in [8], measuring the channel in 65 μs.

A unified channel sounder suitable for all types of 5G channels might be unfeasible, but designing a common platform allows to share development, hardware (HW), and maintenance costs. This paper describes a sounding system designed to be flexible in meeting different objectives. Focus has been on the following

- Multi-channel sounding capability at both ends of the link. This is needed for massive MIMO measurements with multiple users, or for classical MIMO.
- Measurement speed must be sufficiently high, so that channel changes are negligible during the time it takes to perform the measurement of links.
- Frequency band flexibility is highly desirable since various frequency bands from the sub-6 GHz up to 100 GHz frequency are considered for 5G. Further, for some investigations it may be necessary to measure in several bands simultaneously.
- Multi-link capabilities for measuring channels separated by large distances. For example the simultaneous measurement of the links between a base station and two or more independent mobile stations. This allows to study

the joint properties of the channels, needed for e.g., beam-steering applications, multi-user MIMO or distributed MIMO.

The next section discusses some general sounder properties, followed by a description of the implemented massive MIMO and mmWave sounder, including some practical measurement examples.

II. Sounder Architecture

The objective of a channel sounder is to measure the mobile channel between two antennas, typically represented by the complex channel impulse response (CIR). The CIR allows computation of the output of the channel given the input, and is the basis for different kinds of investigations. By repeated CIR measurements it is possible to derive statistics if measurements are done sufficiently often. Measuring the CIRs for multiple antennas at the same link end enables estimation of angular information, such as angle of arrival or departure, but requires knowledge of the phase relation between the channels. For some investigations it may be sufficient to estimate average power angular profiles in which case mechanical scanning with a directive antenna may be feasible.

A. Requirements

For the purposes of this text we will define a channel snapshot (CS) loosely as the practical implementation of the ideal CIR. The CS has a limited dynamic range, finite maximum duration and bandwidth, etc, as a consequence of the chosen measurement technology and parameters.

Besides carrier frequency and the number of Tx and Rx channels, some key properties of channel sounding systems are:

- Bandwidth. Typically a large bandwidth is desirable to get a high delay resolution, but generally comes at a high complexity/cost and often as a trade-off with CS duration.
- Delay range. The minimum necessary delay range is given by the longest echoes which are detectable within the available dynamic range, typically from a few hundred ns for indoor environments to many μs for outdoor scenarios at legacy cellular bands. For some technologies the delay range is linked to the CS duration and thus is an important design consideration.
- CS repetition rate. According to sampling theory, perfect signal reconstruction is possible if the sampling rate is at least twice the maximum signal bandwidth. In random mobile channels the bandwidth is given by the Doppler spectrum. If signal reconstruction is not needed or if the required snapshot repetition rate is not possible with available equipment, the snapshots may still be useful to compute, for example, average values.
- CS duration. In practice, the measurement of a CS takes some time, which depends on the method. The CS duration should be short compared to the time it takes for the channel to change. In some applications it may be a requirement that the phase does not vary significantly during a snapshot. To illustrate, assume an antenna moving at 5 km/h and the CS is measured at 3.5 GHz. Then the worst case phase change of a plane wave is 2° if the CS duration is 343 μs. If the carrier instead is 35 GHz, the phase change may be up to 20°, since the phase change scales with both speed and carrier frequency.
  Before using a switch to connect a single branch to multiple array elements it is further important to consider the total snapshot duration involving all elements. Provided the CS repetition rate is high enough, switching time can in theory be compensated for via interpolation, but interpolation of noisy measurements could be problematic and further assumes the channel is stationary.
- Dynamic range, instantaneous and average. The dynamic range is the power ratio between the maximum peak and any spurious or noise in the CS, and depends on the sounding principle and on the particular HW.
  Improving the dynamic range is possible by averaging, either directly or, e.g., via longer codes, as explained below. However, this comes at the expense of longer CS duration.
  Since the mobile channel is generally very dynamic, due to e.g., fading and shadowing, automatic gain control (AGC) is often a prerequisite for adequate dynamic range in the CS's.
- Overall size and flexibility of equipment may be crucial for some application domains. For example, it could be required that parts of the Tx/Rx need to be small and human portable, or that one unit needs to be in a car and thus cannot have cable connections to other parts of the sounder. Further, it may be a requirement to have more than two simultaneous link ends, for example if co-channel measurements are desired.

B. Channel Sounding Principle

The channel sounder described in this work is a correlation based sounder, which can be explained briefly as follows. A wide-band pseudo-noise sequence (PNS) is the transmitted signal and the received signal is modeled as the convolution of the PNS with the CIR. This signal is correlated with the known PNS, the result of which is a good approximation of the desired CIR and is used as the CS. Noise terms and correlation cross-terms are reduced with increasing PNS lengths, such that the SNR of the measurements is increased. Note that the increased SNR is obtained without increasing the Tx power, but instead effectively using longer time for the CS.

The method allows for a relatively simple Tx, since the PNS may be binary and result in a low peak to average power ratio (PAPR). In the Rx, one approach is to sample the received signal after down-conversion from the carrier frequency. The correlation process is then carried out using the samples, either immediately or in a post-processing step. This method is flexible and requires only sampling of a single PNS period, and a low CS duration is therefore possible. A main drawback of this architecture is that it requires a minimum sampling rate of twice the sounding bandwidth, effectively limiting the possible bandwidth to 1–2 GHz. Some examples of this sounding approach include [8]–[10].

It is also possible to carry out the correlation process in HW before sampling, allowing much larger bandwidths. This requires transmission of a full PNS period for every sample of the CS, compared to a single PNS period for the entire CS if the correlation is done after sampling. This means that the CS duration for HW correlation is a factor of N longer than the corresponding system with correlation in the digital domain, where the PNS is typically an m-sequence of length $N = 1023$ or more. Sounding with correlation in HW has been used in many years, see [11] but also more recently [7]. Since a short CS duration is crucial for the sounding applications discussed here, the solution employing correlation after sampling is adopted for the current work.

An important sounding principle uses chirp signals, see [5], [6]. Sounding using chirps was disregarded for this work since multiple simultaneous Tx's are not supported with this principle. Sounding based on multi-carrier principles is possible, even with multiple simultaneous Tx'es [12], but requires complex transceiver units. In addition, multi-carrier systems may suffer from high PAPR.

Another popular sounding principle uses a CW signal stepped in frequency, typically a network analyzer. For static environments this is a convenient method where ultra-wide-band channel can be measured, see e.g., [13]. However, for the current applications it is too slow, typically of the order of 1 ms per frequency point, and in addition no AGC exist on standard network analyzers.

C. Measuring multiple channels

Often there is a need to measure multiple channels, for example with the purpose of characterizing (massive) MIMO channels. On the Rx side, it is possible to use several parallel branches or to use a single branch time-multiplexed among different physical antennas or locations. The use of parallel branches at the Tx link end requires some kind of multiplexing scheme, in order to be able to tell the channels apart. Again time-multiplexing has been used, see e.g., [5], [8], [10], but frequency-multiplexing is also possible [12]. Time-multiplexing is a typical choice since it allows to use the same, possibly expensive, circuits for all switched channels. Obviously, using time-multiplexing leads to longer CS duration and it is important to make sure that the CS duration is short enough that the channel can be considered essentially static. Time-multiplexing further requires precise synchronization, perhaps between both Tx and Rx link ends.

Creating a virtual array by physical movement of an antenna is typically slow and requires an essentially static channel for long periods of time [2]. Similarly, beam-scanning using directional antennas may be useful for power-angular spectra, but phase is not available [14].

For Tx multiplexing the correlation based sounding methods have an advantage, since code orthogonality is already exploited and may be extended to have several simultaneous Tx'es.

III. Massive MIMO Sounder

Overall the implemented sounder is correlation based with a parallel structure at both the Tx and at the Rx. The structure is flexible and re-configurable to suit different application scenarios, such as massive MIMO, distributed MIMO or vehicle-to-vehicle. Fig. 1 illustrates a massive MIMO setup. The following describes some of the main features.

TABLE I
Key features of the massive MIMO sounder.

	Switched/parallel massive MIMO	Fully parallel MIMO
No. Tx elem.	16 (2×8)	1–16
No. Rx elem.	128	1–8
Carrier Freq.	300–6000 MHz	300–6000 MHz
Bandwidth	200 MHz	200 MHz
Simultaneous multi-band	yes	yes
Snapshot duration	1.3 ms	40.95 μs
Snapshot delay range	2.4 μs	2.4–40.95 μs
Snapshot repetition, cont.	90 Hz	90 Hz
Snapshot repetition, burst	763 Hz	12 kHz
Dynamic range	35 dB	35 dB

A. Features

The most important characteristics of the massive MIMO measurement system are listed in Table I (left column). For conventional MIMO the switch is omitted resulting in a shorter CS duration (right column).

1) Parallel Rx structure: With the objective of designing a system capable of measuring up to 128 element arrays the trade-offs in the design choices become important. A fully switched system would be too slow for measurement in most mobile environments, while a fully parallel system with 128 Rx branches was deemed too expensive and impractical. A compromise structure has 8 parallel Rx branches, each equipped with a 1:16 switch for a total of 128 Rx channels.

A single Rx branch consists of a frontend and two IF stages. The first mixing frequency depends on the chosen band, so that the AGC operates on a fixed 660 MHz IF. The sampler units are located inside four server computers, where each unit is handling the 400 MHz sampling and storage for two Rx branches.

2) Parallel Tx structure: The correlation sounder principle allows simultaneous Tx'es in a simple and efficient way provided by orthogonality of the PNS. A 16 channel PNS generator (located in MS1) is used for the massive MIMO setup, allowing two mobile stations each with 8 Tx channels. Each Tx branch is a BPSK transmitter equipped with a 30 dBm output amplifier (sub-6 GHz only).

It is desired to have two independent but simultaneously operating mobile units, MS1/MS2. This is achieved by placing 8 of the PA's together with 8 fiber/coax converters in a relatively small and light unit (MS2) that may be moved into confined spaces independent of the main rack (MS1). MS1 and MS2 are connected via a 300 m fiber.

Each MS is using a circular array of antennas, but other array configurations are possible, either distributed or co-located. Currently the MS1/MS2 fiber only supports sub-6 GHz frequencies.

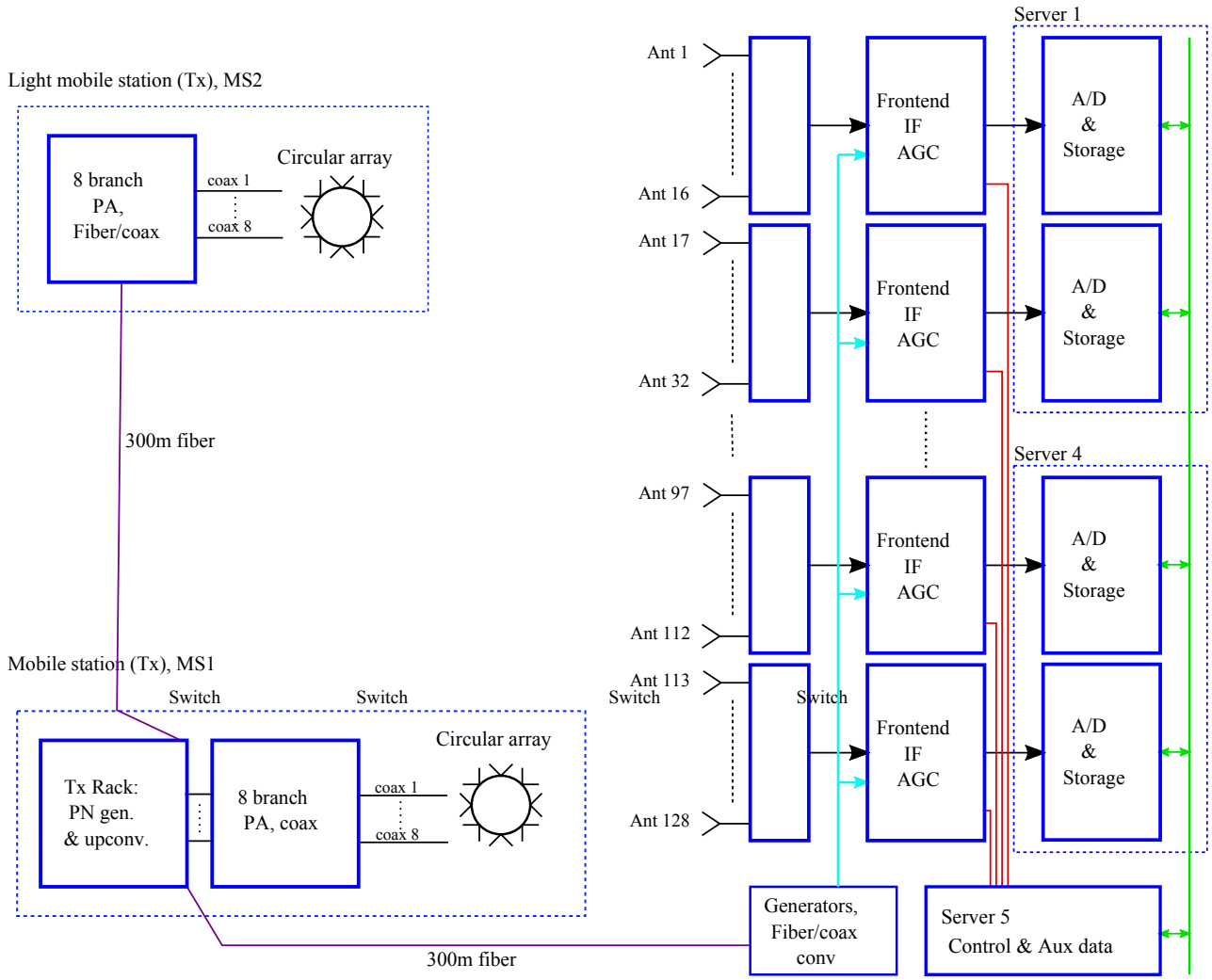

Fig. 1. Block diagram of Massive MIMO sounder with two independent circular-array mobile stations.

3) Synchronization: The best phase stability is obtained if the same RF carrier is used both for up- and down-conversion in the Tx and Rx, respectively. Using a common 10 MHz reference shared among different generators is also possible. At mmWave frequencies generators are costly, so a single generator is shared for this reason as well. The RF carrier is shared via an optical link of 300 m connecting the Rx and Tx, i.e., MS1.

4) Separate Tx / Rx units: It may be impossible to use a fiber link between the sounder ends for large distances or e.g., if one or both ends are in a car. In these cases, two separate rubidium standards are utilized for the best phase stability.

5) AGC: To cope with dynamic channels, AGC is incorporated in each Rx branch. Every CS is obtained using two PNS periods. During the first period the Rx power is measured and a step attenuator is afterwards set for best utilization of the sampler units. In the following PNS period the samples are acquired. If switching is employed, the AGC setting and following sampling is repeated for all antennas. The AGC, switch control, and timing are implemented in programmable logic, with user control from a control and display computer.

6) Multiple bands: In some scenarios it is desirable to measure in more than one frequency band simultaneously. With the parallel structure of the sounder this is possible by dedicating sets of Tx and Rx branches for different bands.

7) Timing: The measurement of a single Tx-Rx channel within a CS requires transmission of two PNS periods, each with length N. The PNS chips are output at a rate of 100 MHz, corresponding to a bandwidth of about 200 MHz. For simplicity a typical choice of $N = 4095$ is used in the following, but other lengths are readily possible.

The PNS length is important because it determines the suppression of both noise and unwanted components and therefore determines the dynamic range. In practice a dynamic range of about 35 dB is achieved for $N = 4095$, limited by phase noise and non-linearities.

If $K = 16$ is the number of switching stages used in the massive MIMO setup, the duration of a single CS is $T_{\text{CS}} = 2KN/100$ MHz $\simeq 1.3$ ms. Note that if no switching is used the CS duration essentially only corresponds to one PNS, i.e. 40.95 μs, as indicated in Table I.

The maximum CS repetition rate can be found as $1/T_{\text{CS}} \simeq$

763 Hz, obtained if measurement of a CS is started right after finishing the previous. However, this rate is only possible in bursts, where a continuous CS rate of about 90 Hz is achievable.

The delay range of each CS is given by the duration of the PNS, which is shared among all parallel Tx. Thus for a single Tx the depth is 40.95 μs while it is 2.4 μs for 16 elements.

8) Post-Processing: During measurements the raw data from all the sampler units are stored to disk together with AGC levels and other auxiliary data. The post-processing of this data consists of

- Down-conversion from the 100 MHz IF to complex baseband.
- Correlation with the PNS.
- Separation of Tx'es in the code domain.
- Compensation for instantaneous AGC levels.
- Calibration and filtering.

The calibration routines must be based on individual measurements of all channel combinations, since cable lengths, amplifiers, filters, etc. are inevitably different.

B. Examples

The example is from a 3.5 GHz massive MIMO setup, since this band is an important candidate for 5G systems. The elements for both the massive array as well as the two circular arrays are designed as horn antennas of Vivaldi type for the 3–4 GHz band, with around 45° half-power beamwidth at 3.5 GHz. The horn antennas provide about 11 dB gain, resulting in generally better link budgets. Note that these antennas make sense for the campaign described below, but generally have to be selected carefully to fit the application scenario. The individual elements are mounted in brackets and arranged for a linear massive array, with other module arrangements possible. The element spacing is 5 cm, corresponding to about 0.6 wavelengths. Fig. 2 shows the massive array.The circular horn array used at the mobile station end consists of eight uniformly spaced elements.

The following shows a few results from a measurement campaign carried out in an indoor sports arena with grandstands on all four sides and located in a building of size about 83 by 108 m, see Fig. 3. The potentially many closely spaced users in such a place is a scenario where a 5G network could benefit from massive MIMO. The massive array was located near a corner of the seating area, and the remote Tx units with circular arrays (see Fig. 1) act as two mobile stations which are moved to various locations on the floor and seating area. The massive MIMO CS's were measured at a rate of 60 Hz.

Fig. 4(a) shows the channel gain as color versus the delay and location, for a single Tx element pointing approximately opposite the LOS. A single element of the massive array is used. The x-axis range corresponds to about 10 m of movement, where the gradually increasing delay is clearly visible for the first arriving strong component at a delay of about 150–175 ns. There are more significant components arriving at delays about 350–550 ns, corresponding to reflections on the far end walls. The plot in Fig. 4(b) shows similar power-delay profiles but where the x-axis instead is the Rx element index

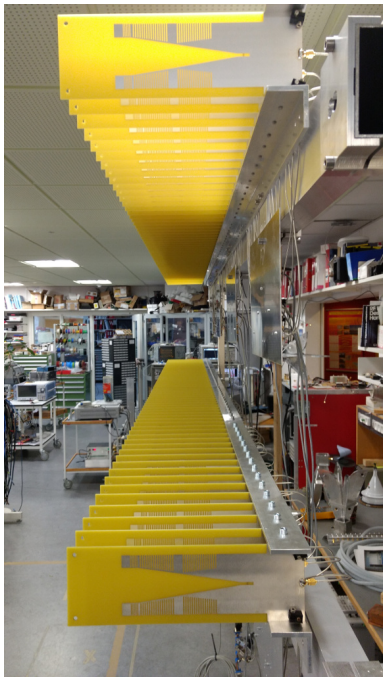

Fig. 2. Side view of a 128-element massive array of Vivaldi horn antennas, arranged in two rows.

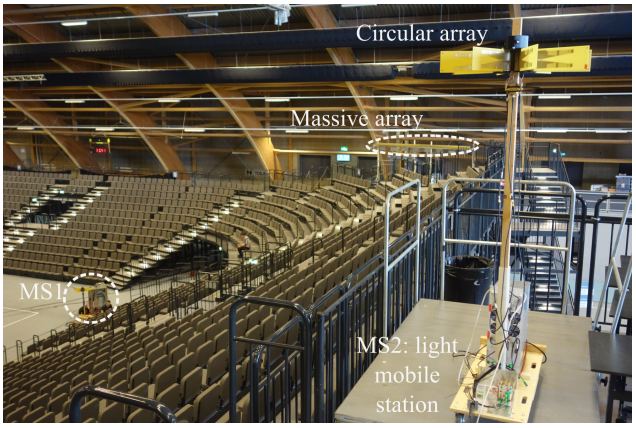

Fig. 3. Measurement setup in an indoor sports arena with seating grandstands on all four sides. The arena and grandstands cover an area of about 65 by 72 m inside a larger building of size about 83 by 108 m with a maximum ceiling height of about 21 m above the floor.

in the massive array, for a single CS. Due to the massive array being 6.4 m long the first arriving component at about 150 ns arrives at slightly different delays for the different elements.

The recorded measurements allow for a complex characterization and analysis of the dynamic channel, such as beamforming, model-based multipath component estimation, or studies of non-stationarities due to the large array. However, this is out of the scope for this paper, focusing on acquiring accurate measurements for such tasks.

IV. mmWave Sounder

By adding an extra up- and down-conversion step in the Tx and Rx, respectively, it is possible to extend the sub-6 GHz sounder to cover mmWave frequencies. In this way the inputs

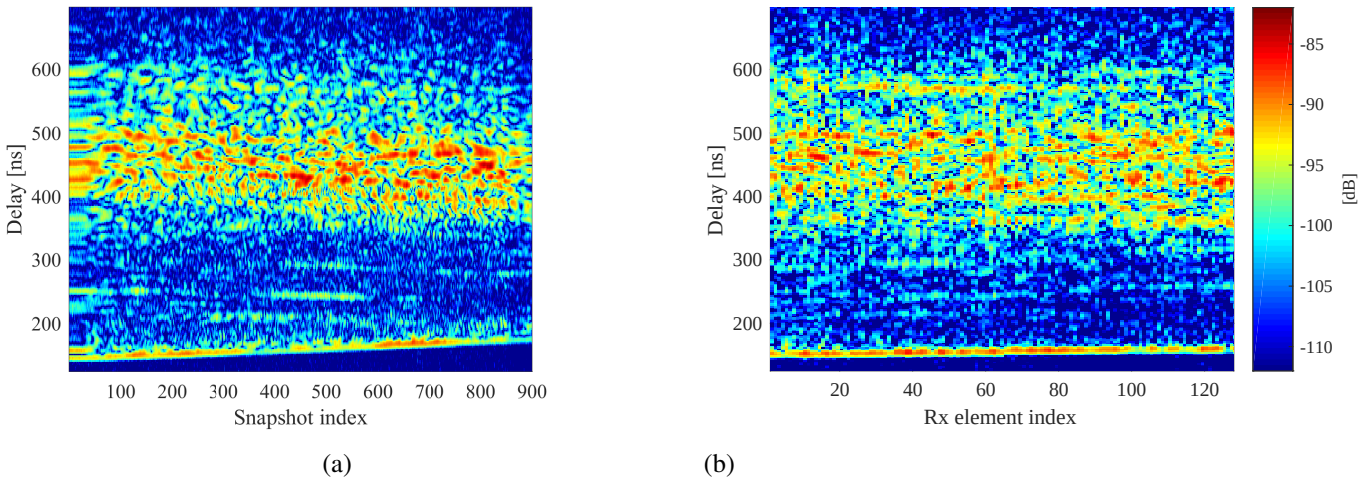

Fig. 4. Massive MIMO sounder measurement in the sports arena environment. The Tx circular array is on the playing field moving along an approximately 10 m path at slow walking speed. (a) Gain versus channel delay and snapshot index. (b) Channel gain versus delay and massive Rx antenna element index for snapshot no. 201.

and outputs of the sounder described so far acts as extra IF stages at, e.g., 5 GHz. A main advantage of this approach is that much of the developed and tested HW and software is kept identical, giving the same flexibility regarding setup of e.g., timing and PNS'es.

The selected converter blocks support 18–40 GHz on the channel side and therefore covers some of the most important new bands proposed for 5G. Currently two up-converters and two down-converter blocks are available, so that 2×2 MIMO channels can be measured fully in parallel. In addition, two 1:8 switch units are available so that e.g., a 2×16 system can be measured.

A. Examples

5G systems at mmWave bands will experience rapid channel dynamics due to the short wavelength and high blocking losses, as well as dominant propagation paths and unpredictable user-terminal interaction in real-usage scenarios. To investigate this channel, real-time channel sounding is crucial. As an example, the described sounder was used to measure channels at 21.5 GHz between a two-port dual-polarized horn antenna and 7 microstrip patch antenna elements inside a mock-up handset, which was held and moved by a person, see [15]. The 2×7 MIMO channel was measured using a 1:7 switch with a CS duration of 41 μs for a single Rx element or 573 μs for all elements, corresponding to a maximum phase change for a plane wave of about 2° or 15°, respectively, assuming a speed of 1 m/s. The CS repetition rate was set to 200 Hz, suitable for the expected maximum Doppler rate indoors.

An extensive campaign was performed in an indoor corridor scenario for both LOS and NLOS, as well as with and without a user holding the mock-up in a realistic grip [15]. The results confirmed that the human body might be detrimental to mmWave links by effectively blocking the dominant propagation paths, while in specific scenarios the body can act as an added scatterer, which can improve the link. The

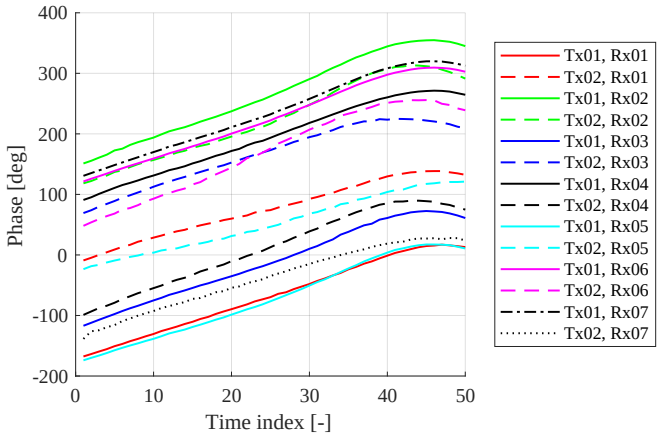

Fig. 5. Phase for vertical (Tx1) and horizontal (Tx2) transmitter polarization and the 7 Rx array elements. The x-axis indicates the index of the CS obtained at 200 Hz.

measurement results further implied that polarization diversity can be utilized to improve the link. Fig. 5 shows an example of the phase evolution versus CS time for all the antenna links and for the dominant delay tap. Clearly, the relative phase among the Rx elements changes smoothly due to the movements of the user's hand in the otherwise mostly static environment, thus indicating potential for beam steering.

V. Conclusion

Both massive MIMO and mmWave channels are expected to be used in upcoming 5G networks. To support development of these systems, the new types of channels must be characterized and modeled based on measurements. Channel sounding for these applications is challenging due to the short wavelength or the high number of channels combined with a channel which is changing. This article has outlined a sounder system capable of measurements in both types of channels, emphasizing the most important design decisions made in order to reach the

objective of a highly flexible sounder with respect to frequency band, the number of measured Tx and Rx channels, and the CS timing.

For massive MIMO channels the designed sounder is capable up to 16 Tx and 128 Rx channels anywhere in the frequency range 0.3–6 GHz at CS rates up to 763 Hz and CS duration of 1.3 ms. This is possible due to a 16 branch Tx and 8 branch Rx parallel structure. The Rx branches all have independent AGC and are further extended to 128 channels via switches. If less Rx channels are needed, a shorter CS duration is possible, e.g., 41 μs.

The setup supports tight phase synchronization using fiber connections or independent units suitable for e.g., measurements involving vehicles.

At mmWave bands the sounder uses the same basic sounder structure, which is extended to cover frequencies in the band 18–40 GHz for two Tx and two Rx branches. Up to 16 Rx channels are possible via switching.

References

[1] "5G spectrum recommendations - April 2017," 5G Americas, Tech. Rep., 2017.

[2] X. Gao, O. Edfors, F. Rusek, and F. Tufvesson, "Massive MIMO performance evaluation based on measured propagation data," *IEEE Trans. Wireless Commun.*, vol. 14, no. 7, pp. 3899–3911, July 2015.

[3] Mobile and wireless communications Enablers for the Twenty-twenty Information Society (METIS), "Deliverable D1.4 METIS channel models," Seventh Framework Programme. https://www.metis2020.com/wp-content/uploads/METIS_D1.4_v3.pdf (Accessed on May 31, 2018.), Tech. Rep., 2015.

[4] J. Zhang, Z. Zheng, Y. Zhang, J. Xi, X. Zhao, and G. Gui, "3D MIMO for 5G NR: Several observations from 32 to massive 256 antennas based on channel measurement," *IEEE Communications Magazine*, vol. 56, no. 3, pp. 62–70, MARCH 2018.

[5] R. Mehmood, J. W. Wallace, and M. A. Jensen, "24 GHz indoor MIMO channel measurements," in *2015 IEEE International Symposium on Antennas and Propagation USNC/URSI National Radio Science Meeting*, July 2015, pp. 1786–1787.

[6] S. Salous, S. M. Feeney, X. Raimundo, and A. A. Cheema, "Wideband MIMO channel sounder for radio measurements in the 60 GHz band," *IEEE Transactions on Wireless Communications*, vol. 15, no. 4, pp. 2825–2832, April 2016.

[7] G. R. MacCartney and T. S. Rappaport, "A flexible millimeter-wave channel sounder with absolute timing," *IEEE Journal on Selected Areas in Communications*, vol. 35, no. 6, pp. 1402–1418, June 2017.

[8] P. B. Papazian, C. Gentile, K. A. Remley, J. Senic, and N. Golmie, "A radio channel sounder for mobile millimeter-wave communications: System implementation and measurement assessment," *IEEE Transactions on Microwave Theory and Techniques*, vol. 64, no. 9, pp. 2924–2932, Sept 2016.

[9] K. Kalliola and P. Vainikainen, "Characterization system for radio channel of adaptive array antennas," in *Personal, Indoor and Mobile Radio Communications, 1997. Waves of the Year 2000. PIMRC '97., The 8th IEEE International Symposium on*, vol. 1, Sep 1997, pp. 95–99 vol.1.

[10] J. Zhang, Y. Zhang, Y. Yu, R. Xu, Q. Zheng, and P. Zhang, "3-D MIMO: How much does it meet our expectations observed from channel measurements?" *IEEE J. Sel. Areas Commun.*, vol. 35, no. 8, pp. 1887–1903, Aug 2017.

[11] D. Cox, "Delay doppler characteristics of multipath propagation at 910 MHz in a suburban mobile radio environment," *IEEE Trans. Antennas Propag.*, vol. 20, no. 5, pp. 625–635, Sep. 1972.

[12] M. Kim, J. i. Takada, and Y. Konishi, "Novel scalable MIMO channel sounding technique and measurement accuracy evaluation with transceiver impairments," *IEEE Trans. Instrum. Meas.*, vol. 61, no. 12, pp. 3185–3197, Dec 2012.

[13] Q. H. Abbasi, A. Sani, A. Alomainy, and Y. Hao, "Experimental characterization and statistical analysis of the pseudo-dynamic ultrawideband on-body radio channel," *IEEE Antennas Wireless Propag. Lett.*, vol. 10, pp. 748–751, 2011.

[14] J. Ko, Y. J. Cho, S. Hur, T. Kim, J. Park, A. F. Molisch, K. Haneda, M. Peter, D. J. Park, and D. H. Cho, "Millimeter-wave channel measurements and analysis for statistical spatial channel model in in-building and urban environments at 28 GHz," *IEEE Trans. Wireless Commun.*, vol. 16, no. 9, pp. 5853–5868, Sept 2017.

[15] J. Hejselbæk, J. Ø. Nielsen, W. Fan, and G. F. Pedersen, "Measured 21.5 GHz indoor channels with user-held handset antenna array," *IEEE Trans. Antennas Propag.*, vol. 65, no. 12, pp. 6574–6583, Dec 2017.

Jesper Ødum Nielsen received his master's degree in 1994 and a PhD degree in 1997, both from Aalborg University, Denmark. He is currently employed at Aalborg University as an associate professor, focusing on experimental investigation of the mobile radio channel. He has been involved in Massive MIMO and mm-wave channel sounding and modeling, measurements using live GSM and LTE networks, as well as over the air testing of active wireless devices.

Wei Fan received his B.Eng. degree from Harbin Institute of technology, China in 2009, Masters double degree with highest honours from Politecnico di Torino, Italy and Grenoble Institute of Technology, France in 2011, and Ph.D. degree from Aalborg University, Denmark in 2014. He is currently an associate professor at Aalborg University. His main areas of research are over-the-air testing, radio channel sounding, modeling and emulation.

Patrick C.F. Eggers received the M.Sc.E.E. and Ph.D. degree from Aalborg University, in 1984 and 2003 respectively. He has been with Aalborg University since 1984. He initiated the M.Sc.E.E. course at Aalborg University, specializing in wireless communications. His main interests lay in the field of propagation and wireless communications. His current focus is on angular propagation characteristics related to multi-antenna system operation (Massive MIMO) and statistical channel modelling for example for ultra-reliable communications.

Gert Frølund Pedersen received the B.Sc.E.E. degree, with honor, from College of Technology in Dublin, Ireland in 1991, and the M.Sc. E. E. degree and Ph.D. from Aalborg University in 1993 and 2003. He has been with Aalborg University since 1993 where he is a full Professor heading APMS section. His research has focused on radio communication for mobile terminals, small antennas, diversity systems, propagation and biological effects and especially OTA testing.