Design of Quadratic D-stable Fuzzy Controller for DC Microgrids with Multiple CPLs

Mardani, Mohammad Mehdi; Vafamand, Navid; Khooban, Mohammad Hassan; Dragicevic, Tomislav; Blaabjerg, Frede

Published in:
I E E E Transactions on Industrial Electronics

DOI (link to publication from Publisher):
10.1109/TIE.2018.2851971

Publication date:
2019

Document Version
Accepted author manuscript, peer reviewed version

This article has been accepted for publication in a future issue of this journal, but has not been fully edited. Content may change prior to final publication. Citation information: DOI 10.1109/TIE.2018.2851971, IEEE Transactions on Industrial Electronics

Design of Quadratic D-stable Fuzzy Controller for DC Microgrids with Multiple CPLs

Mohammad Mehdi Mardani, Navid Vafamand, Mohammad Hassan Khooban, *Member, IEEE*, Tomislav Dragičević, *Senior, IEEE*, Frede Blaabjerg, *Fellow, IEEE*

***Abstract*— The DC microgrid (MG) system has several advantages over the AC one. Therefore, it recently became a preferred architecture in numerous industrial applications. Many loads in DC MGs are electronically regulated and they challenge the stability of the system due to their constant power load (CPL) behavior. This paper proposes a systematic and simple approach to design an improved state feedback controller for the power buffer that can stabilize the DC MGs with multiple CPLs. Based on the so-called sector nonlinearity approach, the nonlinear DC MG with several CPLs is exactly represented in a Takagi-Sugeno (TS) fuzzy model. Then, by employing the quadratic D-stability theory, the sufficient conditions to guarantee the stability and transient performance of the closed-loop system are obtained in terms of linear matrix inequalities (LMIs), such that the decay rate and oscillatory behavior of the closed-loop DC MG system are guaranteed to lie inside a pre-defined region. The LMI conditions can be numerically solved by utilizing the YALMIP toolbox in the MATLAB. Finally, to illustrate the merits and implementation validity of the proposed approach, some hardware-in-the-loop (HiL) real-time simulation (RTS) results on a DC MG, which feeds two CPLs, are presented. In comparison with the state-of-the-art techniques, the RTS results indicate the simplicity, validity, and better performance of the proposed approach. According to the results, one can conclude that the proposed approach not only theoretically assures the stability but also guarantees the fast convergence and less oscillatory response of the DC MGs with multiple CPLs.**

***Index Terms*— DC microgrid (MG), power buffer, constant power load, Takagi-Sugeno (TS) fuzzy modeling, D-stability, hardware-in-the-loop (HiL), real-time simulation (RTS).**

NOMENCLATURE

r_j	Resistance of the j-th CPL
L_j	Inductor of the j-th CPL
$i_{L,j}$	Inductor current of the j-th CPL
$v_{C,j}$	Capacitor voltage of the j-th CPL
C_j	Capacitor of the j-th CPL
P_j	Constant power of the j-th CPL
V_{dc}	Voltage of the DC-link
$i_{L0,j}$	Equilibrium point of the inductor current for the j-th CPL
$v_{C0,j}$	Equilibrium point of the capasitor voltage for the j-th CPL
$P_{max,j}$	Maximum value of P_j
r_s	Resistance of the supply part
L_s	Inductor of the supply part
$i_{L,s}$	Inductor current of the supply part
$v_{C,s}$	Capacitor voltage of the supply part
i_{es}	Controller injection current
C_s	Capacitor of the supply part
$i_{L0,s}$	Equilibrium point of the inductor current for supply part
$v_{c0,s}$	Equilibrium point of the capacitor voltage for the supply part
M_j	Normalized membership functions
Q	Number of CPLs
x_j	State variables of the j-th CPL
x_s	State variables of the source
$\tilde{X}$	Overall state variables
$\bar{h}_j$	Nonlinear terms of the j-th CPL
h_j	Nonlinear terms of the j-th CPL in the equilibrium point
A_j	System matrix for the j-th CPL
A_s	System matrix for the supply part
A_{js}	System matrix for the correlation between the j-th CPL and the supply part
A_{cn}	System matrix for the correlation between the supply part and the j-th CPL
$\overline{A}$	Overall system matrix for the multiple CPLs case
d_j	The coefficient matrix of the j-th nonlinear term $\bar{h}_j$
$\overline{D}$	The coefficient matrix of the nonlinear term for the multiple CPLs case
b_{es}	Input matrix for the input variable i_{es}
b_s	Input matrix for the input variable V_{dc}
$\overline{B_{es}}$	Overall input matrix for the input variable i_{es} for the multiple CPLs case
$\overline{B_s}$	Overall input matrix for the input variable V_{dc} for the multiple CPLs case
$\tilde{A}_1$	System matrix for the fuzzy rule 1
$\tilde{A}_2$	System matrix for the fuzzy rule 2
K_i	Control gain matrix of the i-th fuzzy rule
W	LMI decision variable
Z_i	LMI decision variables for the i-th rule
I	Identical matrix
$R_{j,\tilde{x}}$	The validity region of TS fuzzy model

ACRONYMS

CPL	Constant Power Load
ESS	Energy Storage System
HiL	Hardware-in-the-Loop
LMI	Linear Matrix Inequality
MG	Microgrid

M. M. Mardani, N. Vafamand, M. H. Khooban, T. Dragičević, and F. Blaabjerg are with the Department of Energy Technology, Aalborg University, 9220 Aalborg East, Denmark. (e-mail: {mmm, nav, kho, tdr, fbl}@ et.aau.dk).

This article has been accepted for publication in a future issue of this journal, but has not been fully edited. Content may change prior to final publication. Citation information: DOI 10.1109/TIE.2018.2851971, IEEE Transactions on Industrial Electronics

PDC	Parallel Distributed Compensation
PV	Photovoltaics
RTS	Real-Time Simulation
SPS	Shipboard Power System
TS	Takagi-Sugeno

I. INTRODUCTION

THE advances in the power electronics technology have enabled the novel architectures like DC and AC microgrids (MGs). The high efficiency, robustness, and compatibility with the DC type distributed generators (DGs) like photovoltaics (PV) and batteries, as well as with electronic loads make DC MGs often a preferable architectural option compared to AC MGs [1], [2]. Power electronics plays an important role in stability, and reliability of DC MGs (e.g. clustering of MGs [3]). Recently, in the literature of the related topics, the problem of stabilizing and controlling DC MGs with constant power loads (CPLs) has drawn a lot of attention because most of the electronic loads exhibit constant power behavior. Such loads are nowadays essential parts of several applications, including shipboard power systems (SPS) [4], and aerospace [5]. One of the challenging issues in controlling of DC MGs is coping with the negative incremental resistance effect of CPLs, which tends to destabilize the system.

Due to the property of the negative incremental impedance of CPLs, the overall DC MG system with CPLs can become unstable. Because of the nonlinearity structure of CPLs, several nonlinear control approaches are presented to cope with the instability behavior and destructive effect of the CPLs [6]–[8]. Ref. [5] designs a linear state feedback controller such that the stability of the closed-loop system is guaranteed. Subsequently, by employing the presented control law, an injecting power reference is generated to stabilize the system. However, this approach mandates that an injecting stabilizing current is fed to each of the CPLs. In Refs. [7] and [8], the backstepping methods are used in which some derivative terms are used. Since the system is affected by noise, these approaches are not able to completely reject the CPLs nonlinearity characteristics [9]. In [10], to investigate the applicability of the control algorithm, some hardware-in-the-loop (HiL) real-time simulations (RTS) tests are presented. However, the DC MG is controlled by a linear PI controller and the performance of the system is not investigated. Additionally, the linear controller is only valid inside a small vicinity of the equilibrium point. Furthermore, the destructive effects of CPLs are not addressed in [10].

Among aforementioned control methods in the area of designing a controller for DC MGs with multiple CPLs, the Takagi-Sugeno (TS) fuzzy modeling is becoming a timely and interesting topic in the literature [9], [11]. In the TS fuzzy model, the nonlinear system is split into local linear subsystems called fuzzy rules. Then, by fuzzy blending of the local fuzzy rules, the overall fuzzy model will be achieved [12], [13]. Compared to the linear modeling techniques, the fuzzy model-based controller design procedure for TS fuzzy model is as simple as linear one; meanwhile, the performance of the fuzzy model-based controllers is significantly better. Therefore, numerous fuzzy control methods such as state feedback controller [14], fuzzy observer-based controller [15], output feedback controller [16], distributed sampled-data fuzzy controller [17], and distributed fuzzy polynomial controller [13], have been investigated in the literature. During the recent years, the linear matrix inequality (LMI) approaches are distinguished to construct a systematic, simple, and effective way to analyze the stability and stabilization of DC MGs with CPLs [9], [11]. However, only the stability analysis of the TS fuzzy model is addressed in [11]; and, [9] confines the controller design of TS fuzzy systems to a robust linear controller. Such linear controller for nonlinear DC MGs reduces the closed-loop system performance.

Reviewing the literature reveals that, the transient performance improvement in the almost all of existing linear and nonlinear control schemes for the DC MGs with CPLs is left behind. The main reason is that the existing nonlinear approaches (such as backstepping, sliding mode, feedback linearization) are too complex to involve the transient performance. Thereby, theoretically improving the performance as well as the stability based on the conventional nonlinear approaches is very hard and may be impossible for different systems. Also, it is shown that linear control methods fail to simultaneously improve the settling time and overshoot performances [18]. Thus, besides the stability issues, further efforts are needed to mitigate the effect of the CPLs in an optimal and effective manner.

This paper proposes a novel and enhanced TS fuzzy controller to assure the stability and performance of the DC MG with CPLs. By utilizing the sector nonlinearity approach, the nonlinear DC MG system with CPLs is modeled by a TS fuzzy structure. Based on the concept of parallel distributed compensations (PDC) and employing the quadratic D-stability theory, the sufficient conditions are achieved in terms of LMIs. The obtained LMIs guarantee that the decay and oscillating rates of the state variables evolutions for the closed-loop nonlinear DC MG system lie into the predefined region. The proposed nonlinear controller is as simple as the linear one presented in [5], [9], [10]. However, the transient performance of the closed-loop system in the proposed method is significantly improved compared to the nonlinear techniques [7]–[9]. Finally, to evaluate the validity and practically implementation of the results for the proposed approach, some HiL RTSs are presented. The results indicate that the proposed approach is robust, and the settling time and oscillation of the response are significantly improved compared to the state-of-the-art techniques.

The organization of this paper can be summarized as follows: The nonlinear dynamic modeling of DC MG comprising CPLs is presented in Section II. The exact TS fuzzy model of the obtained nonlinear DC MG system and structure of the fuzzy controller are discussed in Section III. Section IV studies the problem of designing quadratic D-stable controller. The HiL RTS results are addressed in Section V. Finally, the paper is closed by conclusions in Section VI.

II. DYNAMICAL MODELLING OF DC MICROGRID

Fig. 1 illustrates a common DC MG, which is utilized in different applications including navy ships, electric aircraft, and automotive industries. The overall DC MG in Fig. 1 contains several CPLs, generators, and energy storage system (ESS). To better investigate a complicated DC MG, first, a single CPL and a DC source, each of which is connected to a DC source, are considered in Figs. 2 to derive the dynamical model. Then, the obtained relations for a single CPL are utilized to describe a DC MG with multiple CPLs.

An ideal CPL is modeled as a current sink whose current injection is given by its power divided by the CPL voltage [19]. As is illustrated in Fig. 2, the j-th CPL is connected with the DC source through a RLC filter and is modeled as follows:

$$\begin{cases} \dot{i}_{L,j} = -\dfrac{r_j}{L_j} i_{L,j} - \dfrac{1}{L_j} v_{C,j} + \dfrac{1}{L_j} V_{dc} \\ \dot{v}_{C,j} = \dfrac{1}{C_j} i_{L,j} - \dfrac{1}{C_j} \dfrac{P_j}{v_{c,j}} \end{cases} \tag{1}$$

where P_j is a constant power, and $r_j = r_{dc,j} + r_{L,j}$. The Jacobian matrix of (1) has a negative real part. Therefore, it guarantees the existence of a real-operating point, if the equilibrium point $[i_{L0,j} \quad v_{C0,j}]$ satisfies the following constraint [18]:

$$P_j < \min\left\{\frac{V_{dc}}{4r_j}, \frac{r_j C_j v_{C0,j}^2}{L_j}\right\} = P_{max,j} \tag{2}$$

This article has been accepted for publication in a future issue of this journal, but has not been fully edited. Content may change prior to final publication. Citation information: DOI 10.1109/TIE.2018.2851971, IEEE Transactions on Industrial Electronics

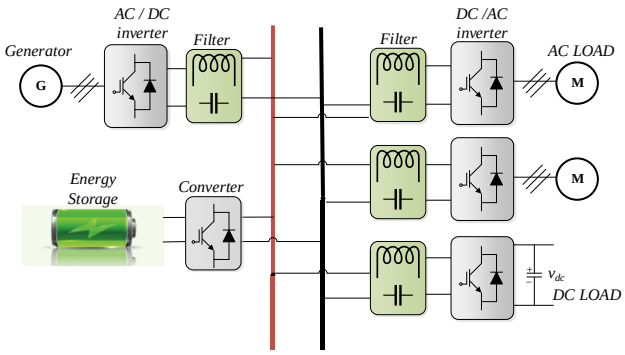

Fig. 1. The overall schema of DC MG of navy ships, electric aircrafts, automotive, etc.

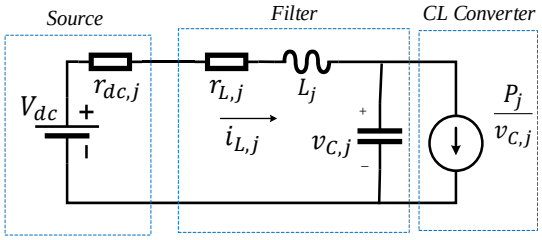

Fig. 2. Overview of a DC MG for the j-th source and power converter load as a CPL.

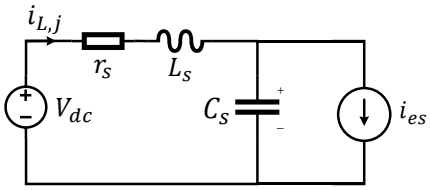

Fig. 3. Overview of the energy storage supply.

The first and second terms in right side of inequality (2) assure finding a real-operating point for the DC MG and guaranteeing the negative real part of the eigenvalues of the Jacobian matrix, respectively [18]. Until the CPLs are considered in the DC MG system, the safe operation of the DC MG system must be investigated [18]. Furthermore, the source subsystem, which is illustrated in Fig. 3, can be represented as:

$$\begin{cases} \dot{i}_{L,s} = -\frac{r_s}{L_s} i_{L,s} - \frac{1}{L_s} v_{C,s} + \frac{1}{L_s} V_{dc} \\ \dot{v}_{C,s} = \frac{1}{C_s} i_{L,s} - \frac{1}{C_s} i_{es} \end{cases} \tag{3}$$

where i_{es} denotes the controller injection current. By utilizing suitable change of variables as follows:

$$\begin{cases} \tilde{i}_{L,j} = i_{L,j} - i_{L0,j} \\ \tilde{v}_{C,j} = v_{c,j} - v_{c0,j} \\ \tilde{i}_{L,s} = i_{L,s} - i_{L0,s} \\ \tilde{v}_{C,s} = v_{c,s} - v_{c0,s} \end{cases} \tag{4}$$

where $i_{L0,j}$, $v_{c0,j}$, $i_{L0,s}$, and $v_{c0,s}$ are the equilibrium points of the DC MG, the equilibrium points of nonlinear systems (1) and (3) are shifted to the origin. Consequently, for (1), one can conclude [18]:

$$\begin{cases} \dot{\tilde{i}}_{L,j} = -\frac{r_j}{L_j} \tilde{i}_{L,j} - \frac{1}{L_j} \tilde{v}_{C,j} \\ \dot{\tilde{v}}_{C,j} = \frac{1}{C_j} \tilde{i}_{L,j} + \frac{P_j}{C_j v_{C0,j}} \frac{\tilde{v}_{C,j}}{\tilde{v}_{C,j} + v_{C0,j}} \end{cases} \tag{5}$$

and (3) is converted to

$$\begin{cases} \dot{\tilde{i}}_{L,s} = -\frac{r_s}{L_s} \tilde{i}_{L,s} - \frac{1}{L_s} \tilde{v}_{C,s} \\ \dot{\tilde{v}}_{C,s} = \frac{1}{C_s} \tilde{i}_{L,s} - \frac{1}{C_s} \tilde{i}_{es} \end{cases} \tag{6}$$

By considering a CPL unit and a source sub-system, the overall scheme of a DC MG with an ESS and multiple CPLs is shown in Fig. 1. Based on the dynamical model (1) for single CPL, the jth CPL can be represented in the form of

$$\dot{x}_j = A_j x_j + d_j \bar{h}_j + A_{js} x_s \tag{7}$$

where $j = \{1,2,\dots,Q\}$. Furthermore, the $x_s = [x_{1,s} \;\; x_{2,s}]^T = [i_{L,s} \;\; v_{C,s}]^T$ and $x_j = [x_{1,j} \;\; x_{2,j}]^T = [i_{L,j} \;\; v_{C,j}]^T$ are the source and CPLs state vectors, respectively; $\bar{h}_j = -\frac{1}{v_{c,j}}$. The system matrices in (7) are as follows:

$$A_j = \begin{bmatrix} -\frac{r_j}{L_j} & -\frac{1}{L_j} \\ \frac{1}{C_j} & 0 \end{bmatrix}, \quad d_j = \begin{bmatrix} 0 \\ \frac{P_j}{C_j} \end{bmatrix}, \quad A_{js} = \begin{bmatrix} 0 & \frac{1}{L_j} \\ 0 & 0 \end{bmatrix} \tag{8}$$

By considering (3), which presents the dynamical model of a single energy storage supply, the source subsystem connected with Q CPLs can be rewritten as

$$\dot{x}_s = A_s x_s + b_s V_{dc} + b_{es} i_{es} + \Sigma_{j=1}^{Q} A_{cn} x_j \tag{9}$$

where

$$A_s = \begin{bmatrix} -\frac{r_s}{L_s} & -\frac{1}{L_s} \\ \frac{1}{C_s} & 0 \end{bmatrix}, b_s = \begin{bmatrix} \frac{1}{L_s} \\ 0 \end{bmatrix}, A_{cn} = \begin{bmatrix} 0 & 0 \\ \frac{-1}{C_s} & 0 \end{bmatrix}, \quad b_{es} = \begin{bmatrix} 0 \\ -\frac{1}{C_s} \end{bmatrix} \tag{10}$$

By applying the same coordinate change around the operating point as for the (1) and (3) to derive (5) and (6), the overall DC MG dynamical model for Fig. 4 can be rewritten as follows [17]:

$$\dot{\tilde{X}} = \overline{A}\tilde{X} + \overline{D}h + \overline{B_{es}}\tilde{i}_{es} + \overline{B_s}\tilde{V}_{dc} \tag{11}$$

where $\tilde{X} = [x_1^T \;\; x_2^T \;\; \dots \;\; x_Q^T \;\; x_s]^T$ and

$$\overline{A} = \begin{bmatrix} A_1 & 0 & \dots & 0 & A_{1s} \\ 0 & A_2 & \cdots & 0 & A_{2s} \\ \vdots & \vdots & \ddots & \vdots & \vdots \\ 0 & 0 & \cdots & A_Q & A_{Qs} \\ A_{cn} & A_{cn} & \cdots & A_{cn} & A_s \end{bmatrix},$$
$$\overline{D} = \begin{bmatrix} d_1 & 0 & \dots & 0 \\ 0 & d_2 & \cdots & 0 \\ \vdots & \vdots & \ddots & \vdots \\ 0 & 0 & \cdots & d_Q \\ 0 & 0 & \cdots & 0 \end{bmatrix}, \overline{B_{es}} = \begin{bmatrix} 0 \\ \vdots \\ 0 \\ b_{es} \end{bmatrix}, \overline{B_s} = \begin{bmatrix} 0 \\ \vdots \\ 0 \\ b_s \end{bmatrix} \tag{12}$$

and $h = [h_1, \dots, h_Q]^T$ with

$$h_j = \frac{\tilde{v}_{C,j}}{v_{C0,j}(\tilde{v}_{C,j} + v_{C0,j})} \tag{13}$$

The j-th CPL is stable in the local region $R_{j,\tilde{x}} = \{\tilde{x} | -w_{1,j} \le \tilde{i}_{L,j} \le w_{1,j} \;\; \& \;\; -w_{2,j} \le \tilde{v}_{C,j} \le w_{2,j}\}$ where $w_{1,j}$ and $w_{2,j}$ are positive scalars that can be calculated through an optimization algorithm such as an LMI technique [9]. The change of variable eases designing the controller by making the origin to be the equilibrium point of the new nonlinear dynamic (11).

The goal is to design the control input i_{es} such that the closed-loop stability and performance are guaranteed. To achieve this target, a TS fuzzy based controller is proposed in this paper. In the following, the equivalent TS fuzzy model (11) will be derived.

This article has been accepted for publication in a future issue of this journal, but has not been fully edited. Content may change prior to final publication. Citation information: DOI 10.1109/TIE.2018.2851971, IEEE Transactions on Industrial Electronics

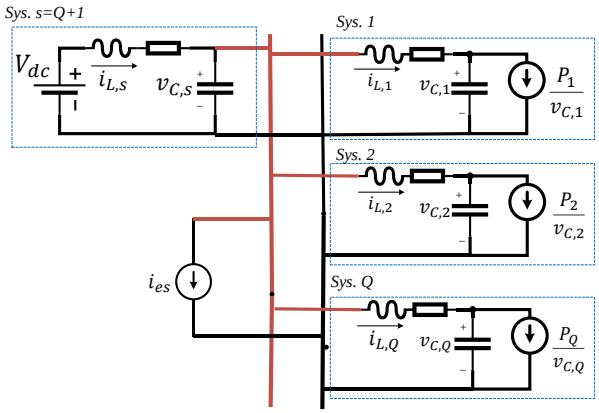

Fig. 4. A DC MG with Q CPLs and a source.

III. TS FUZZY MODELING AND FUZZY CONTROLLER

During recent years, the TS fuzzy model is converted to a promising research topic for designing controller for nonlinear systems. The TS fuzzy model has several advantages in comparison with the conventional existent controllers. The TS fuzzy model is known as a bridge among the nonlinear systems and linear control theory and convexity theory [12]. In other words, the TS fuzzy model approaches deploy the straightforward linear control theory to design local linear controllers which are then aggregated through the fuzzy techniques to assure the stability and performance issues. Thereby, the TS fuzzy model constructs a simple and effective way to analyze the nonlinear systems and facilitates considering different transient performances in the design procedure [12], [19]. In the following, the nonlinear DC MG is systematically exactly represented by TS fuzzy model trough the so-called sector nonlinearity method [12].

For the case of the DC MG (11) with a CPL (i.e., $Q = 1$) and in the local region $R_{j,\tilde{x}}$ with $j = 1$, the upper and lower sectors of the nonlinear term (13) are computed as $U_{min}\tilde{v}_{C,1} \le h_1 \le U_{max}\tilde{v}_{C,1}$, where

$$U_{min} = \frac{1}{v_{C0,1}(\tilde{w}_{2,1} + v_{C0,1})}, U_{max} = \frac{1}{v_{C0,1}(-\tilde{v}_{C,1} + v_{C0,1})} \tag{14}$$

with $-\tilde{w}_{2,1} \le \tilde{v}_{C,1} \le \tilde{w}_{2,1}$. Based on the sector nonlinearity approach, the nonlinear term h_1 can be decomposed to

$$h_1 = M_1 U_{min}\tilde{v}_{C,1} + M_2 U_{max}\tilde{v}_{C,1} \tag{15}$$

where M_1 and M_2 are normalized membership functions such that satisfy

$$M_1 + M_2 = 1 \tag{16}$$

By solving (15) and (16), the normalized membership functions M_1 and M_2 results in

$$\begin{cases} M_1 = \dfrac{U_{max}\tilde{v}_{C,1} - h_1}{(U_{max} - U_{min})\tilde{v}_{C,1}} \\ M_2 = \dfrac{h_1 - U_{min}\tilde{v}_{C,1}}{(U_{max} - U_{min})\tilde{v}_{C,1}} \end{cases} \tag{17}$$

Thereby, the membership functions of the TS fuzzy model are obtained systematically. The fuzzy IF-THEN rules for DC MG with a single CPL are obtained will be of the forms [12]:

$$\begin{aligned} &\textbf{Rule 1: IF } \frac{h_1}{\tilde{v}_{C,1}} \text{ is } U_{min} \text{ THEN } \dot{\tilde{X}} = \tilde{A}_1\tilde{X} + B_{es}\tilde{i}_{es} + B_s\tilde{V}_{dc} \\ &\textbf{Rule 2: IF } \frac{h_1}{\tilde{v}_{C,1}} \text{ is } U_{max} \text{ THEN } \dot{\tilde{X}} = \tilde{A}_2\tilde{X} + B_{es}\tilde{i}_{es} + B_s\tilde{V}_{dc} \end{aligned} \tag{18}$$

where

$$\tilde{A}_1 = \begin{bmatrix} -\frac{r_1}{L_1} & -\frac{1}{L_1} & 0 & \frac{1}{L_1} \\ \frac{1}{C_1} & \frac{P_1}{C_1}U_{min} & 0 & 0 \\ 0 & 0 & -\frac{r_s}{L_s} & -\frac{1}{L_s} \\ -\frac{1}{C_s} & 0 & \frac{1}{C_s} & 0 \end{bmatrix}, B_{es} = \begin{bmatrix} 0 \\ 0 \\ 0 \\ -\frac{1}{C_s} \end{bmatrix},$$
$$\tilde{A}_2 = \begin{bmatrix} -\frac{r_1}{L_1} & -\frac{1}{L_1} & 0 & \frac{1}{L_1} \\ \frac{1}{C_1} & \frac{P_1}{C_1}U_{max} & 0 & 0 \\ 0 & 0 & -\frac{r_s}{L_s} & -\frac{1}{L_s} \\ -\frac{1}{C_s} & 0 & \frac{1}{C_s} & 0 \end{bmatrix}, B_s = \begin{bmatrix} 0 \\ 0 \\ \frac{1}{L_s} \\ 0 \end{bmatrix} \tag{19}$$

and $\tilde{X} = \begin{bmatrix} \tilde{i}_{L,1} & \tilde{v}_{C,1} & \tilde{i}_{L,s} & \tilde{v}_{C,s} \end{bmatrix}^T$. Then, by utilizing the singleton fuzzier, product inference engine, and center of average defuzzifier, the overall TS fuzzy model will be achieved as follows:

$$\dot{\tilde{X}} = \Sigma_{i=1}^{2} M_i\{\tilde{A}_i\tilde{X} + B_{es}\tilde{i}_{es} + B_s\tilde{V}_{dc}\} \tag{20}$$

Remark 1: *Although, the procedure of the deriving an equivalent TS fuzzy model for the DC MG with one CPL is provided, the sector nonlinearity approach can also be employed for a general DC MG with multiple CPLs. From (11) one concludes that each CPL adds one nonlinear term in the state space model of the DC MG system. By the means of the sector nonlinearity approach, each nonlinear term is described by two sectors. Then, the overall TS fuzzy model will be obtained by aggregating of sectors and has $r = 2^Q$ rules.*

The TS fuzzy model is the basis of designing fuzzy model-based controller. Based on the TS fuzzy model (20) and a PDC scheme, the following fuzzy controller is suggested:

$$\tilde{i}_{es} = \Sigma_{i=1}^{2} M_i K_i \tilde{X} \tag{21}$$

where M_i are membership functions and the control gain matrices are denoted by K_i, which will be designed through LMI techniques. Based on (20) and (21), the closed-loop system can be calculated as follows:

$$\dot{\tilde{X}} = \Sigma_{i=1}^{2} M_i\{\tilde{A}_i + B_{es}K_i\}\tilde{X} = A\tilde{X} \tag{22}$$

where $A = \Sigma_{i=1}^{2} M_i\{\tilde{A}_i + B_{es}K_i\}$. The control signal (21) has to guarantee that the state variables of the DC MG converge to their nominal values as fast as possible with a minimum overshoot. Thus, the D-stability concept is proposed for the DC MG to obtain such robust transient performance.

IV. DESIGN OF QUADRATIC D-STABLE CONTROLLER

Definition 1 (LMI region) [20], [21]***:*** *Consider the characteristic function which is defined as follows:*

$$f_D(z) = T + Gz + G^T\bar{z} \tag{23}$$

For any arbitrary symmetric matrix T and matrix G, the LMI region in the complex plane is defined as

$$D = \{z = x + jy: \quad f_D(z) < 0\} \tag{24}$$

Definition 2 (Quadratic D-stability) [20], [21]***:*** *Consider an LMI region D which is defined in definition 1. The nonlinear system $\dot{x}(t) = f(x(t))x(t)$ is quadratic D-stability if there exists a quadratic Lyapunov function $V = x^T P x$ with a positive definite symmetric P such that:*

$$T \otimes P + G \otimes \left(Pf(x(t))\right) + G^T \otimes \left(Pf(x(t))\right)^T < 0 \tag{25}$$

where $\otimes$ is the Kronecker product.

In the conventional Lyapunov stability, the goal is to derive sufficient conditions that assure $\dot{V} < 0$ which only guaratnees the closed-loop stability. However, in the D-stability method, the

This article has been accepted for publication in a future issue of this journal, but has not been fully edited. Content may change prior to final publication. Citation information: DOI 10.1109/TIE.2018.2851971, IEEE Transactions on Industrial Electronics

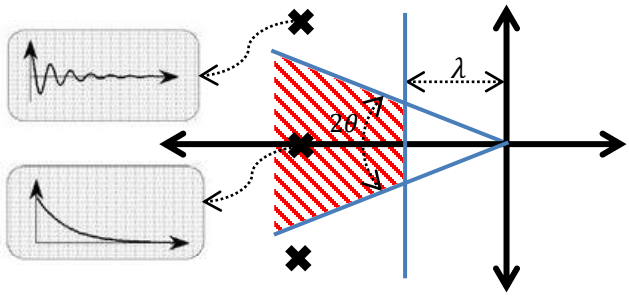

Fig. 5. Proposed D-stability criteria.

sufficient conditions that guarantee $\frac{\dot{V}}{V} \in D$ will be obtained. The LMI region D is defiend by its own matrices Q and G. A proper selection of matrices T and G not only brings about the closed-loop stability but also assure the some predefined performance criterions. Fig. 5 shows the defined LMI region based on which the controller will be designed. The region $Real\{z\} < -\lambda$ provides a fast response convergence, by increasing the decay rate of the response. Meanwhile, the region $\tan\left(\frac{Real\{z\}}{Imag\{z\}}\right) < \theta$ leads to a less oscillatory response by placing the poles of the system near the real axis. By selecting a higher λ, the decay rate is incereasined. Also, choosing small θ results a low oscillatory rate. The matrixes T and G are computed so that both of the aforementioned regains are introduced based on the Definition 1, as follows [22]:

$$T = \begin{bmatrix} 2\lambda & 0 & 0 \\ 0 & 0 & 0 \\ 0 & 0 & 0 \end{bmatrix}, G = \begin{bmatrix} 1 & 0 & 0 \\ 0 & \sin(\theta) & \cos(\theta) \\ 0 & -\cos(\theta) & \sin(\theta) \end{bmatrix} \tag{26}$$

where λ and θ are defined in Fig. 5. Regarding to the robust performance of the DC MG closed-loop system based on the D-stability theory, the following theorem is proposed.

Theorem 1: *The overall closed-loop TS fuzzy model (22) is quadratic D-stable with the matrices (26), if there exist a symmetric matrix W and any matrices Z_1 and Z_2 such that the following LMI conditions are held:*

$$W > 0 \tag{27}$$

$$T \otimes W + G \otimes \tilde{A}_i W + G \otimes B_{es} Z_i + (G \otimes A_i W + G \otimes B_{es} Z_i)^T < 0 \tag{28}$$

where $i = \{1,2\}$. Besides, the control gain matrices are obtained by:

$$K_i = Z_i (W^{-1}) \tag{29}$$

Proof: Substituting the closed-loop system (22) into (25), results in

$$T \otimes P + G \otimes \left(P\left[\Sigma_{i=1}^{2} M_i \{\tilde{A}_i + B_{es} K_i\}\right]\right) + G^T \otimes \left(\left[\Sigma_{i=1}^{2} M_i \{\tilde{A}_i + B_{es} K_i\}\right]^T P\right) < 0 \tag{30}$$

Since $\Sigma_{i=1}^{2} M_i = 1$, by utilizing the associativity property of the Kronecker product [23], (30) equals to:

$$IT \otimes PI + IG \otimes \left(P\{\tilde{A}_i + B_{es} K_i\}\right) + G^T I \otimes \left(\{\tilde{A}_i + B_{es} K_i\}^T P\right) < 0 \tag{31}$$

where I is the identical matrix. Based on the mixed-product property of the Kronecker product [23], one has:

$$(I \otimes P)(T \otimes I) + (I \otimes P)\left(G \otimes \{\tilde{A}_i + B_{es} K_i\}\right) + \left(G^T \otimes \{\tilde{A}_i + B_{es} K_i\}^T\right)(I \otimes P) < 0 \tag{32}$$

Pre- and post-multiplying (32) by $(I \otimes P)^{-1} = I^{-1} \otimes P^{-1} = I \otimes P^{-1}$, one has

$$(T \otimes I)(I \otimes P^{-1}) + \left(G \otimes \{\tilde{A}_i + B_{es} K_i\}\right)(I \otimes P^{-1}) + (I \otimes P^{-1})\left(G^T \otimes \{\tilde{A}_i + B_{es} K_i\}^T\right) < 0 \tag{33}$$

Employing the mixed-product property of the Kronecker product results in

$$T \otimes P^{-1} + G \otimes \{\tilde{A}_i P^{-1} + B_{es} K_i P^{-1}\} + G^T \otimes \{P^{-1} \tilde{A}_i^T + P^{-1} K_i^T B_{es}^T\} < 0 \tag{34}$$

By defining the change of variables $P^{-1} = W$ and $K_i P^{-1} = Z_i$, the proof will be completed.

Remark 2: *Although, Theorem 1 provides sufficient conditions of designing a fuzzy controller for the DC MG with one CPL, the suggested approach can be simply extended to the case of DC MGs with multiple CPLs. To do this, it is only needed to consider the number of fuzzy rules in (18) and (28) as $r = 2^Q$ (which is discussed in Remark 1) and compute Z_i for $i = 1, \dots, 2^Q$.*

Remark 3: *The overall procedure of the proposed Quadratic D-stable controller is indicated in Fig. 6. First, the nonlinear DC MG system is exactly represented by TS fuzzy model and the number f fuzzy rules (i.e. r), the fuzzy membership functions (i.e. M_i), local system matrices (i.e. $\tilde{A}_i$ for $i = 1, \dots, r$), and the input matrix (i.e. B_{es}) are computed. The conditions (27) and (28) of Theorem 1, are solved with respect to the given r, $\tilde{A}_i$, and B_{es} to numerically compute the matrices W and Z_i. Note that, several toolboxes in Matlab, including the YALMIP can solve such conditions. Now, the control gain matrices are obtained by (29). Finally, by considering the normalized membership functions, the fuzzy controller of the from (21) is designed and applied to the nonlinear DC MG system. The sufficient conditions of Theorem 1 are independent to the structure and nonlinearity of the DC MGs. Therefore, by changing the parameters and structure of the DC MG, one needs to compute the equivalent TS fuzzy system and use the YALMIP toolbax to design the controller. Consequently, a systematic design procedure for any DC MG with any number of the CPLs is proposed.*

Remark 4: *Compared to the existing control methods, the proposed quadratic D-stable controller has the following advantages over the other control methods:*

1. *In comparison with the sliding mode* [24] *and the backstepping* [25], [26] *controllers, time derivatives are not appeared in the structure of the proposed approach. Thus, the robustness of the proposed approach against noise is significantly improved. Additionally, the design procedure for the nonlinear DC MG system needs significant efforts. However, the design procedure for the proposed nonlinear control method for DC MG is straightforward. The reason is that in the other techniques, the control gains are computed analytically; meanwhile in the proposed approach, they are calculated numerically through the well-known LMI software.*
2. *In comparison with the feedback linearization method* [8], *the proposed approach does not utilize any nonlinearity cancelation. Thus, a more robustness of the proposed approach is assured compared with state-of-the-art feedback linearization methods.*
3. *In comparison with Mamdani fuzzy controller* [27], *the closed-loop stability and performance of the proposed approach is theoretically guaranteed by the quadratic D-stability theory.*
4. *In comparison with the conventional linear control approaches* [9], [10], *the transient performance of the proposed approach is significantly improved from decay rate and oscillating ratio points of view. Although the design procedure for both the proposed and the linear control methods are simple and is based on linear control theories, the proposed PDC fuzzy controller is more suitable for the nonlinear nature of DC MGs.*

This article has been accepted for publication in a future issue of this journal, but has not been fully edited. Content may change prior to final publication. Citation information: DOI 10.1109/TIE.2018.2851971, IEEE Transactions on Industrial Electronics

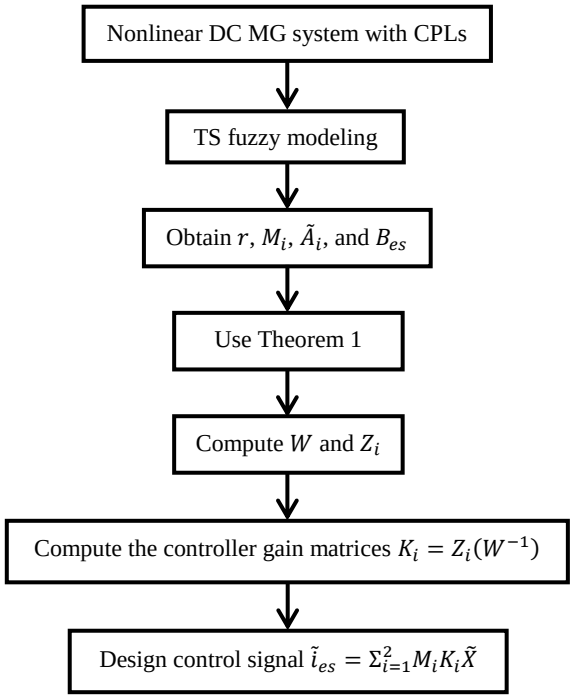

Fig. 6. The overall schematic of the proposed approach.

TABLE I
PARAMETERS FOR DC MG WITH ONE CPL

$r_1 = 1.1\ \Omega$	$x_{1,20} = 198.34$	$C_s = 500\ \mu F$
$L_1 = 39.5\ mH$	$\tilde{x}_{2N} = 130.4$	$V_{dc} = 200\ V$
$C_1 = 500\ \mu F$	$r_s = 1.1\ \Omega$	
$P_1 = 300\ W$	$L_s = 39.5\ mH$	

Fig. 7. The HiL RTS setup and configuration of the OPAL-RT setup.

TABLE II
CLOSED-LOOP PERFORMANCE OF THE DIFFERENT APPOACHES

	Settl. Time (s)	Integral of error	Norm-2 of $u(t)$
Prop. Approach	**0.0093**	**0.2644**	**0.0018**
Ref. [5]	0.0240	0.4815	0.0021
Ref. [9]	0.0309	1.0615	0.0029
Input free	0.0936	2.1172	0
Improvement	61.25%	45.08%	14.28%

V. HARDWARE-IN-THE-LOOP REAL-TIME SIMULATION RESULTS

To evaluate the validity of the proposed approach, some HiL RTS results on the DC MG with a CPL are extracted. The main feature of the HiL RTS compared to the conventional off-line simulations is its ability to emulate delays and errors and to investigate the computational burden of a controller. Fig. 7 illustrates the HiL setup and its overall configuration. The HiL consists of 1) a set of OPAL-RT, 2) a computer, and 3) a router. By employing an Ethernal board, the OPAL-RT is connected to the DK60 board.

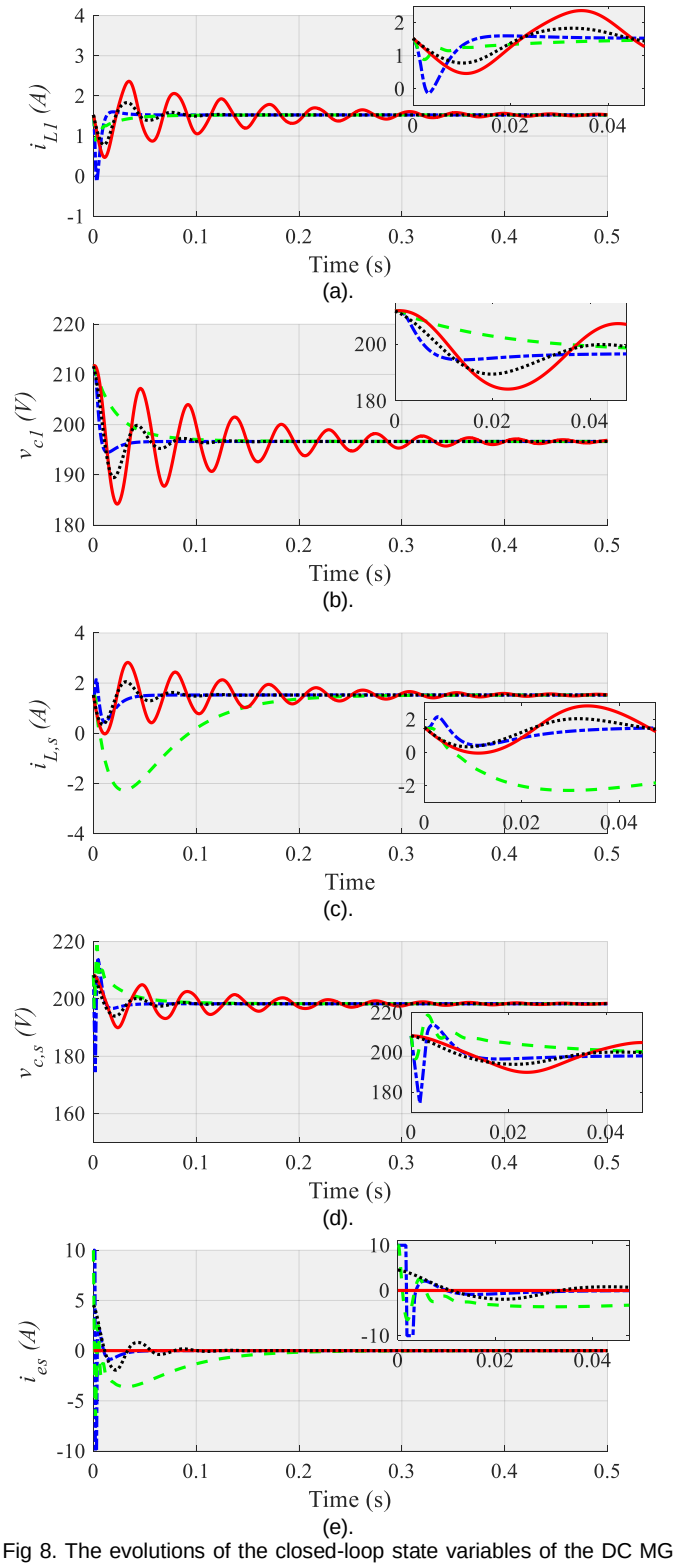

Fig 8. The evolutions of the closed-loop state variables of the DC MG for the proposed approach, [5], [9], and the unforced system are illustrated by dash-dot blue line (-.), dotted black line (. .), dashed green line (- -) and solid red line (-), respectively. (a). i_{L_1} (b). v_{c_1} (c). i_{L_2} (d). v_{c_2} (e). i_{es}.

Consider the DC MG with the structure presented in Fig. 4 and consider only one CPL is in the circuit. The parameters of the DC MG are presented in Table I. Based on the designed quadratic D-stability controller, the evolutions of the state variables are

This article has been accepted for publication in a future issue of this journal, but has not been fully edited. Content may change prior to final publication. Citation information: DOI 10.1109/TIE.2018.2851971, IEEE Transactions on Industrial Electronics

guaranteed to lie inside the LMI region, which is illustrated in Fig. 5. The feasible solutions of Theorem 1 are obtained by considering the parameters of the LMI region as $\lambda = 100$ and $\theta = \frac{\pi}{10}$. By solving the proposed LMI conditions presented in Theorem 1, the controller gain matrices will be achieved as follows:

$$K_1 = [142.4601 \quad 19.5947 \quad -44.1408 \quad 5.2364]$$
$$K_2 = [190.7203 \quad 26.8210 \quad -60.3274 \quad 6.8071]$$

The control signal is designed by utilizing equation (21). Also, to compare the results, the LMI conditions proposed in [9] are numerically solved. The controller gain matrix of [9] is obtained as follows:

$$F = [29.8742 \quad 0.6326 \quad 1.1017 \quad 0.3556]$$

and the signal control of [9] is designed by $\tilde{i}_{es} = F\tilde{x}$. The control signal $\tilde{i}_{es}$ for the proposed approach, [5], and [9] are considered to be limited by ± 10. Utilizing the initial conditions $x = [1.7 \quad 210 \quad 1.7 \quad 210]^T$, the evolutions of the state variables (i.e. voltage and current of the ESS and CPL, controlled by the current of the storage energy supply) of the proposed approach, [5], and [9] are depicted in Fig. 8. The simulation results clearly indicate that, based on the proposed approach, the transient performance such as settling time and oscillating behavior of the evolutions of the state variables are improved compared with the state-of-the-art methods [5], [9].

Furthermore, the settling time, integral of error of the system response, and norm-2 of the control input of different approaches are provided in Table II. As can be seen in Table II, the proposed approach not only enhances the transient and steady sate performances, but also consumes less injecting power than the other methods to stabilize the DC MG.

VI. Conclusions

As it is clear from the simulation results, one can conclude that the transient and steady state performance of the closed-loop DC MG system with CPL was significantly improved compared to the newly published papers. This goal was obtained by designing the D-stable controller for nonlinear DC MG system. The quadratic D-stability criteria not only guarantees the stability of the closed-loop DC MG system, but also ensures that all of the Eigenvalues of the closed-loop TS fuzzy model are located within a predefined region. Thus, the negative impedance characteristic of CPLs was compensated. Additionally, the transient performance of the closed-loop DC MG system was improved significantly. The same as a linear controller, the PDC controller has a simple design procedure, which is based on the linear control theory. However, the designed controller was suitable for the nonlinear nature of the DC MG system. Additionally, apart from the behaviors of state variables, the injecting power was adjusted by PDC controller and applied to the nonlinear DC MG system through the ESS. The stabilizing injecting power was reduced compared to state-of-the-art methods. Thus, the better performance of the DC MG system was guaranteed by consuming less amount of injecting power.

For the future work, the authors suggest the following research topics:

1. Designing a robust H_∞ controller to guarantee the stability of the uncertain DC MGs with CPLs.
2. Analyzing the stability of DC MGs in the presence of AC side and rectifier unit.
3. Applying the proposed methods on different configurations of the MG, with different loads, renewable sources and grid typologies.

References

[1] T. Dragičević, X. Lu, J. C. Vasquez, and J. M. Guerrero, "DC Microgrids-Part I: A Review of Control Strategies and Stabilization Techniques," *IEEE Trans. Power Electron.*, vol. 31, no. 7, pp. 4876–4891, Jul. 2016.

[2] T. Dragičević, X. Lu, J. C. Vasquez, and J. M. Guerrero, "DC Microgrids Part II: A Review of Power Architectures, Applications, and Standardization Issues," *IEEE Trans. Power Electron.*, vol. 31, no. 5, pp. 3528–3549, May 2016.

[3] M. H. Amini, K. G. Boroojeni, T. Dragičević, A. Nejadpak, S. S. Iyengar, and F. Blaabjerg, "A comprehensive cloud-based real-time simulation framework for oblivious power routing in clusters of DC microgrids," in *2017 IEEE Second International Conference on DC Microgrids (ICDCM)*, 2017, pp. 270–273.

[4] M. H. Khooban, T. Dragičević, F. Blaabjerg, and M. Delimar, "Shipboard Microgrids: A Novel Approach to Load Frequency Control," *IEEE Trans. Sustain. Energy*, vol. 9, no. 2, pp. 843–852, Apr. 2018.

[5] P. Magne, B. Nahid-Mobarakeh, and S. Pierfederici, "General Active Global Stabilization of Multiloads DC-Power Networks," *IEEE Trans. Power Electron.*, vol. 27, no. 4, pp. 1788–1798, 2012.

[6] J. Liu, W. Zhang, and G. Rizzoni, "Robust Stability Analysis of DC Microgrids With Constant Power Loads," *IEEE Trans. Power Syst.*, vol. 33, no. 1, pp. 851–860, Jan. 2018.

[7] Q. Xu, C. Zhang, C. Wen, and P. Wang, "A Novel Composite Nonlinear Controller for Stabilization of Constant Power Load in DC Microgrid," *IEEE Trans. Smart Grid*, pp. 1–1, 2017, doi. 10.1109/TSG.2017.2751755.

[8] G. Sulligoi, D. Bosich, G. Giadrossi, L. Zhu, M. Cupelli, and A. Monti, "Multiconverter Medium Voltage DC Power Systems on Ships: Constant-Power Loads Instability Solution Using Linearization via State Feedback Control," *IEEE Trans. Smart Grid*, vol. 5, no. 5, pp. 2543–2552, Sep. 2014.

[9] L. Herrera, W. Zhang, and J. Wang, "Stability Analysis and Controller Design of DC Microgrids With Constant Power Loads," *IEEE Trans. Smart Grid*, vol. 8, no. 2, pp. 881–888, 2017.

[10] J. Meng, Y. Wang, C. Wang, and H. Wang, "Design and implementation of hardware-in-the-loop simulation system for testing control and operation of DC microgrid with multiple distributed generation units," *Transm. Distrib. IET Gener.*, vol. 11, no. 12, pp. 3065–3072, 2017.

[11] D. Marx, P. Magne, B. Nahid-Mobarakeh, S. Pierfederici, and B. Davat, "Large Signal Stability Analysis Tools in DC Power Systems With Constant Power Loads and Variable Power Loads—A Review," *IEEE Trans. Power Electron.*, vol. 27, no. 4, pp. 1773–1787, 2012.

[12] K. Tanaka and H. O. Wang, *Fuzzy Control Systems Design and Analysis*. New York, USA: John Wiley & Sons, Inc., 2001.

[13] J. L. Pitarch, M. Rakhshan, M. M. Mardani, and M. Sadeghi, "Distributed Saturated Control for a Class of Semilinear PDE Systems: A SOS Approach," *IEEE Trans. Fuzzy Syst.*, vol. 26, no. 2, pp. 749--760, 2018.

[14] G.-H. Yang and H. Wang, "Fault Detection and Isolation for a Class of Uncertain State-Feedback Fuzzy Control Systems," *IEEE Trans. Fuzzy Syst.*, vol. 23, no. 1, pp. 139–151, Feb. 2015.

[15] R. Duan and J. Li, "Observer-based non-PDC controller design for T–S fuzzy systems with the fractional-order α : 0 < α < 1," *IET Control Theory Appl.*, vol. 12, no. 5, pp. 661–668, Mar. 2018.

[16] Y. Wei, J. Qiu, P. Shi, and M. Chadli, "Fixed-Order Piecewise-Affine Output Feedback Controller for Fuzzy-Affine-Model-Based Nonlinear Systems With Time-Varying Delay," *IEEE Trans. Circuits Syst. Regul. Pap.*, vol. 64, no. 4, pp. 945–958, Apr. 2017.

[17] M. M. Mardani, M. Shasadeghi, and B. Safarinejadian, "Design of distributed sampled-data fuzzy controller for a class of non-linear hyperbolic PDE systems: input delay approach," *IET Control Theory Amp Appl.*, vol. 12, no. 6, pp. 728–737, Dec. 2017.

[18] D. K. Fulwani and S. Singh, *Mitigation of Negative Impedance Instabilities in DC Distribution Systems - A Sliding Mode Control Approach*. Berlin, Germany: Springer, 2016.

[19] J. Dong and G. H. Yang, "Control Synthesis of TS Fuzzy Systems Based on a New Control Scheme," *IEEE Trans. Fuzzy Syst.*, vol. 19, no. 2, pp. 323–338, Apr. 2011.

[20] J. Dong and G.-H. Yang, "State feedback control of continuous-time T–S fuzzy systems via switched fuzzy controllers," *Inf. Sci.*, vol. 178, no. 6, pp. 1680–1695, Mar. 2008.

[21] S. Nguang and P. Shi, "Robust H∞ output feedback control design for fuzzy dynamic systems with quadratic D stability constraints: An LMI approach," *Inf. Sci.*, vol. 176, no. 15, pp. 2161–2191, Aug. 2006.

[22] C. Scherer and S. Weiland, *Lecture notes DISC course on linear matrix inequalities in control*. Delft, The Netherlands, 2000.

[23] Y. Wang, N. Roohi, G. E. Dullerud, and M. Viswanathan, "Stability Analysis of Switched Linear Systems Defined by Regular Languages," *IEEE Trans. Autom. Control*, vol. 62, no. 5, pp. 2568–2575, May 2017.

[24] M. Zhang, Y. Li, F. Liu, L. Luo, Y. Cao, and M. Shahidehpour, "Voltage Stability Analysis and Sliding-Mode Control Method for Rectifier in

DC Systems With Constant Power Loads," *IEEE J. Emerg. Sel. Top. Power Electron.*, vol. 5, no. 4, pp. 1621–1630, Dec. 2017.

[25] P. Magne, B. Nahid-Mobarakeh, and S. Pierfederici, "General Active Global Stabilization of Multiloads DC-Power Networks," *IEEE Trans. Power Electron.*, vol. 27, no. 4, pp. 1788–1798, Apr. 2012.

[26] Q. Xu, C. Zhang, C. Wen, and P. Wang, "A Novel Composite Nonlinear Controller for Stabilization of Constant Power Load in DC Microgrid," *IEEE Trans. Smart Grid*, pp. 1–1, 2017, doi. 10.1109/TSG.2017.2751755..

[27] M. K. Al-Nussairi, R. Bayindir, and E. Hossain, "Fuzzy logic controller for Dc-Dc buck converter with constant power load," in *2017 IEEE 6th International Conference on Renewable Energy Research and Applications (ICRERA)*, San Diego, CA, USA, 2017, pp. 1175–1179.

Mohammad Mehdi Mardani was born in Marvdasht, Fars, Iran. He received his M.Sc. degree from the Shiraz University of Technology (Iran) in 2014, where he is currently working toward the Ph.D. degree. Both in Control Engineering. Nowadays, he is a visiting Ph.D. student at Energy Technology Department, Aalborg University, Denmark. He is author or co-author of 12 conference papers and 10 journal papers. His current research interests include Takagi-Sugeno (TS) fuzzy control, LMI/SOS programming, model predictive control (MPC), power electronics and its application in power systems, advanced control of power electronic systems, and DC microgrid.

Navid Vafamand received his B.Sc. degree in electrical engineering and M.Sc. degree in control engineering form Shiraz University of Technology, Iran, in 2012 and 2014, respectively. He is a Ph. D. candidate in control engineering in Shiraz University, Iran. Currently, he is a Ph.D. visiting student at Aalborg University, Denmark. His main research interests include Takagi-Sugeno (TS) fuzzy models, predictive control, and DC microgrids.

Mohammad-Hassan Khooban (M'13) was born in Shiraz, Iran, in 1988. He received the Ph.D. degree from Shiraz University of Technology, Shiraz, Iran, in 2017. He was a research assistant with the University of Aalborg, Aalborg, Denmark from 2016 to 2017 conducting research on Microgrids and Marine Power Systems. Currently, he is a PostDoctoral Associate at Aalborg University, Denmark. His research interests include control theory and application, power electronics and its applications in power systems, industrial electronics, and renewable energy systems. He is author or co-author of more than 100 publications on journals and international conferences, plus one book chapter and one patent. He is currently serving as an Associate Editor of the Complexity Journal.

Tomislav Dragicevic (S'09-M'13-SM'17) received the M.E.E. and the industrial Ph.D. degree from the Faculty of Electrical Engineering, Zagreb, Croatia, in 2009 and 2013, respectively. From 2013 until 2016 he has been a Postdoctoral research associate at Aalborg University, Denmark. From March 2016 he is an Associate Professor at Aalborg University, Denmark. His principal field of interest is overall system design of autonomous and grid connected DC and AC microgrids, and application of advanced modeling and control concepts to power electronic systems. He has authored and co-authored more than 120 technical papers in his domain of interest and is currently editing a book in the field. He serves as an Associate Editor in the IEEE TRANSACTIONS ON INDUSTRIAL ELECTRONICS and in the Journal of Power Electronics.

Frede Blaabjerg (S'86–M'88–SM'97–F'03) was with ABB-Scandia, Randers, Denmark, from 1987 to 1988. From 1988 to 1992, he got the PhD degree in Electrical Engineering at Aalborg University in 1995. He became an Assistant Professor in 1992, an Associate Professor in 1996, and a Full Professor of power electronics and drives in 1998. From 2017 he became a Villum Investigator. He is honoris causa at University Politehnica Timisoara (UPT), Romania and Tallinn Technical University (TTU) in Estonia.

His current research interests include power electronics and its applications such as in wind turbines, PV systems, reliability, harmonics and adjustable speed drives. He has published more than 500 journal papers in the fields of power electronics and its applications. He is the co-author of two monographs and editor of 7 books in power electronics and its applications.

He has received 26 IEEE Prize Paper Awards, the IEEE PELS Distinguished Service Award in 2009, the EPE-PEMC Council Award in 2010, the IEEE William E. Newell Power Electronics Award 2014 and the Villum Kann Rasmussen Research Award 2014. He was the Editor-in-Chief of the IEEE TRANSACTIONS ON POWER ELECTRONICS from 2006 to 2012. He has been Distinguished Lecturer for the IEEE Power Electronics Society from 2005 to 2007 and for the IEEE Industry Applications Society from 2010 to 2011 as well as 2017 to 2018. In 2018 he is President Elect of IEEE Power Electronics Society.