Multiobjective Control for Multivariable Systems with Mixed-sensitivity Specifications

Stoustrup, Jakob; Niemann, H.H.

Published in:
International Journal of Control

DOI (link to publication from Publisher):
10.1080/002071797224711

Publication date:
1997

Document Version
Tidlig version også kaldet pre-print

INT. J. CONTROL, 1997, VOL. 66, NO. 2, 225–243

Multiobjective control for multivariable systems with mixed-sensitivity specifications

JAKOB STOUSTRUP† and HENRIK NIEMANN‡

A series of multiobjective $\mathcal{H}_\infty$ design problems are considered in this paper. The problems are formulated as a number of coupled $\mathcal{H}_\infty$ design problems. These $\mathcal{H}_\infty$ problems can be formulated as sensitivity problems, complementary sensitivity problems or control sensitivity problems for every output (or input) in the system. It turns out that these multiobjective $\mathcal{H}_\infty$ design problems, based on a number of different types of sensitivity problem, can be exactly decoupled into k $\mathcal{H}_\infty$ sensitivity problems for stable systems, where k is the number of outputs (for unstable systems, independent stabilization is required). Further, it is shown how similar techniques can be used to incorporate simultaneous specifications for different control objectives such as $\mathcal{H}_2, l_1$ etc., for the sensitivities. The approach is illustrated by an experimental set-up for a steel mill test rig.

1. Introduction

The area of robust control has received tremendous attention in the control literature recently. In particular, $\mathcal{H}_\infty$ theory has been in the focus since its breakthroughs during the 1980s.

In the main, $\mathcal{H}_\infty$ control is motivated by the following two applications. First, if the modelling errors are assumed to be bounded in $\mathcal{H}_\infty$ norm by a known bound, bounding a transfer function determined by the plant and the controller in $\mathcal{H}_\infty$ norm guarantees robust stability. Second, formulating optimality conditions as frequency domain bounds for a number of transfer functions, $\mathcal{H}_\infty$ theory can be applied as a loop-shaping tool.

In a limited number of cases, robust stability suffices, but in most applications it is required to satisfy optimality specifications as well, and hence some kind of loop-shaping techniques has to be employed.

In the main stream literature, it is suggested that $\mathcal{H}_\infty$ theory is used for such purposes by *stacking* control objectives as, for example, in the so-called *mixed-sensitivity approach*, where a design criterion of the form

$$\left\| \begin{pmatrix} W_S(\cdot)S(\cdot) \\ W_T(\cdot)T(\cdot) \end{pmatrix} \right\|_\infty < \gamma \tag{1}$$

is considered, where $S(\cdot)$ and $T(\cdot)$ are the closed-loop sensitivity and complementary sensitivity, and $W_S(\cdot)$ and $W_T(\cdot)$ are appropriate weightings. The motivation for the mixed-sensitivity approach is that a controller satisfying (1) also satisfies that each

Received 18 March 1966. Revised 31 May 1996.

† Department of Mathematics, Technical University of Denmark, Building 303, DK-2800 Lyngby, Denmark. e-mail: jakob@mat.dtu.dk; internet: http://www.mat.dtu.dk/IEEE/js.html.

‡ Department of Automation, Technical University of Denmark, Building 326, DK-2800 Lyngby, Denmark. e-mail: hhn@iau.dtu.dk.

entry of the matrices $W_S(\cdot)S(\cdot)$ and $W_T(\cdot)T(\cdot)$ is bounded by γ as well, which is usually the original goal.

The problem, however, which we shall address in this paper, is that an approach based on a criterion such as (1) can be rather conservative since all possible cross-couplings between inputs and outputs are considered, which might not be motivated from physics. In effect it might not be possible to meet the performance specifications by this approach, although there might exist an admissible controller which bounds sufficiently each individual sensitivity. For handling this design problem in a more convenient way, we need to apply a multiobjective design approach. By applying a multiobjective design method, it will be possible to remove or reduce the conservatism due to the cross-coupling terms. Recently, some results in this direction have been published by van Diggelen and Glover (1994) which addresses some of the problems treated in this paper. In comparison, the approach taken below is more simple minded and sometimes more restrictive, but the results are also more intuitive and easier to customize to specific applications.

The area of multiobjective control has been an active research area for a number of years. A good survey paper is that by Dorato (1991) describing the methods derived before 1991. Since 1991 both new theoretical results as well as new powerful numerical techniques have been developed. Some of the most interesting results can be found in the papers by Nobuyama and Khargonekar (1995), Elia and Dahleh (1994), Khargonekar and Rotea (1991), Sznaier (1994 a, b), Khargonekar *et al.* (1993).

Until now, many multiobjective design methods have dealt with state feedback problems only. The following implementation is then based on a recovery design (see for example Khargonekar *et al.* (1993)). In this case it is in general required that the system is a minimum phase for obtaining a good recovery design (Saberi *et al.* 1993, Niemann, *et al.* 1993). We shall not make such assumptions in this paper.

In this paper we shall address design problems, which are based on criteria for individual entries in sensitivity functions, rather than on criteria which equalize all directions. We shall also discuss how to impose constraints in different norms on different sensitivities. The approach uses pure frequency domain algebra and is somewhat related to that of Rotea and Prasanth (1994). One difference is that our approach specifically uses the structure of sensitivity optimization problems. The multiobjective design method suggested is based on a direct design of the dynamic controllers without including a recovery step.

2. Multiobjective sensitivity control

In the following we shall study a multioutput sensitivity problem formulated as a number of coupled $\mathcal{H}_\infty$ problems. The approach suggested can be applied to a huge number of variations in the multioutput sensitivity problem, the complementarity sensitivity problem and the control sensitivity problem, but first we shall restrict attention to these three problems.

Throughout the sequel we shall consider a finite-dimensional linear time-invariant system with a state space realization of the form

$$\left.\begin{aligned} \dot{x} &= Ax + Bu \\ y &= Cx + Du \end{aligned}\right\} \tag{2}$$

and with transfer function $G(\cdot)$. We shall assume the plant to be square, with k inputs and outputs.

For such a system, the multiobjective sensitivity problem, the multiobjective complementary sensitivity problem and the control sensitivity problem are depicted in Fig. 1, Fig. 2 and Fig. 3 respectively.

The block diagrams in Figs 1–3 can all be described by the relations

$$\begin{pmatrix} z \\ y \end{pmatrix} = \begin{pmatrix} G_{zw} & G_{zu} \\ G_{yw} & G_{yu} \end{pmatrix} \begin{pmatrix} w \\ u \end{pmatrix}, \quad u = Ky$$

with

$$w = \begin{pmatrix} w_1 \\ w_2 \\ \vdots \\ w_k \end{pmatrix}, \quad u = \begin{pmatrix} u_1 \\ u_2 \\ \vdots \\ u_k \end{pmatrix}, \quad z = \begin{pmatrix} z_1 \\ z_2 \\ \vdots \\ z_k \end{pmatrix}, \quad y = \begin{pmatrix} y_1 \\ y_2 \\ \vdots \\ y_k \end{pmatrix}$$

where

$$\begin{pmatrix} G_{zw} & G_{zu} \\ G_{yw} & G_{yu} \end{pmatrix} = \begin{cases} \begin{pmatrix} I & G \\ I & G \end{pmatrix} & \text{for Fig. 1} \\ \begin{pmatrix} 0 & G \\ I & G \end{pmatrix} & \text{for Fig. 2} \\ \begin{pmatrix} 0 & I \\ I & G \end{pmatrix} & \text{for Fig. 3} \end{cases}$$

Writing the transfer function from w to z as a linear fractional transformation in $\mathcal{K}$ we get

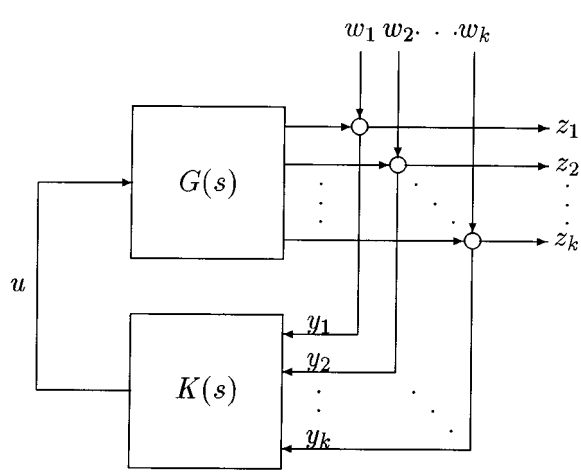

Figure 1. Multiobjective sensitivity problem.

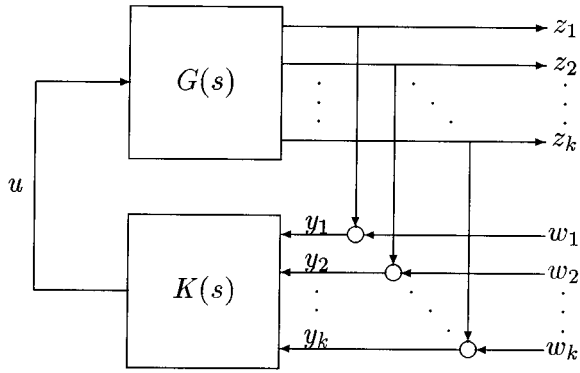

Figure 2. Multiobjective complementary sensitivity problem.

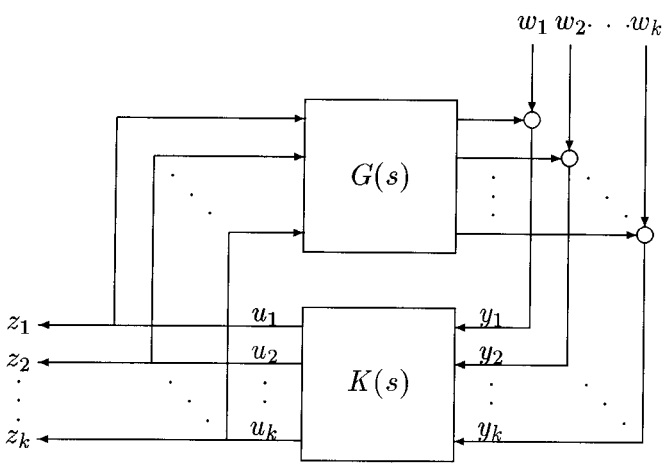

Figure 3. Multiobjective control sensitivity problem.

$$T_{zw} =: \begin{pmatrix} t_{11} & t_{12} & \cdots & t_{1k} \\ t_{21} & t_{22} & \cdots & t_{2k} \\ \vdots & \vdots & \ddots & \vdots \\ t_{k1} & t_{k2} & \cdots & t_{kk} \end{pmatrix}$$

$$= G_{zw} + G_{zu}K(I - G_{yu}K)^{-1}G_{yw}$$

$$= \begin{cases} I + GK(I - GK)^{-1} & \text{for Fig. 1} \\ GK(I - GK)^{-1} & \text{for Fig. 2} \\ K(I - GK)^{-1} & \text{for Fig. 3} \end{cases}$$

where the functions t_{ii}, $i = 1, \ldots, k$, are the output sensitivities (Fig. 1), complementary sensitivities (Fig. 2) or control sensitivities (Fig. 3) respectively. The

functions t_{ij}, $i = 1,\ldots, k$, $j = 1,\ldots, k$, $i \neq j$, are cross-over terms which indicate how much the ith disturbance influences the jth output. Loop-shaping just one of the sensitivities t_{ii} by specifying (the inverse of) an upper bound for the modulus of t_{ii} can be formulated as a standard $\mathcal{H}_\infty$ problem as follows.

Problem 1: *The* ith *single-input single-output (SISO) problem for any of the configurations in Fig. 1, Fig. 2 or Fig. 3 is said to be solvable if and only if there exists a controller K which internally stabilizes the plant and such that*

$$\| W_i t_{ii} |_\infty < 1$$

where

$$t_{ii}(\cdot) = \begin{cases} 1 + g_i(\cdot)K(\cdot)\left[I - G(\cdot)K(\cdot)\right]^{-1} e_i & \text{for Fig. 1} \\ g_i(\cdot)K(\cdot)\left[I - G(\cdot)K(\cdot)\right]^{-1} e_i & \text{for Fig. 2} \\ e_i' K(\cdot)\left[I - G(\cdot)K(\cdot)\right]^{-1} e_i & \text{for Fig. 3} \end{cases}$$

e_i *is the (constant) vector given by*

$$e_i = \begin{pmatrix} 0 \\ \vdots \\ 1 \\ \vdots \\ 0 \end{pmatrix} \quad i\text{th position}$$

and $g_i(s)$ *is the row of transfer functions from u to* z_i*, or equivalently, if there exists an internally stabilizing controller K for the system*

$$\text{Fig. 1}: \begin{cases} \dot{x} = \begin{pmatrix} A & 0 \\ B_{W_i} e_i' C_i & A_{W_i} \end{pmatrix} x + \begin{pmatrix} 0 \\ B_{W_i} \end{pmatrix} w + \begin{pmatrix} B \\ B_{W_i} e_i' D \end{pmatrix} u \\ z = \begin{pmatrix} D_{w_i} e_i' C & C_{W_i} \end{pmatrix} x + D_{W_i} w + D_{W_i} e_i' D u \\ y = \begin{pmatrix} C & 0 \end{pmatrix} x + e_i w + D u \end{cases}$$

or respectively

$$\text{Fig. 2}: \begin{cases} \dot{x} = \begin{pmatrix} A & 0 \\ B_{W_i} e_i' C & A_{W_i} \end{pmatrix} x + \begin{pmatrix} 0 \\ 0 \end{pmatrix} w + \begin{pmatrix} B \\ B_{W_i} e_i' D \end{pmatrix} u \\ z = \begin{pmatrix} D_{W_i} e_i' C & C_{W_i} \end{pmatrix} x + 0 w + D_{W_i} e_i' D u \\ y = \begin{pmatrix} C & 0 \end{pmatrix} x + e_i w + D u \end{cases}$$

or

$$\text{Fig. 3}: \begin{cases} \dot{x} = \begin{pmatrix} A & 0 \\ 0 & A_{W_i} \end{pmatrix} x + \begin{pmatrix} 0 \\ 0 \end{pmatrix} w + \begin{pmatrix} B \\ B_{W_i} e_i' \end{pmatrix} u \\ z = \begin{pmatrix} 0 & C_{W_i} \end{pmatrix} x + 0 w + D_{W_i} e_i' u \\ y = \begin{pmatrix} C & 0 \end{pmatrix} x + e_i w + D u \end{cases}$$

such that when applying the control law $u = Ky$*, the resulting* $\mathcal{H}_\infty$ *norm w to z is less than 1. Here,* W_i *is assumed to have the following state space realization:*

$$\dot{\xi} = A_{W_i}\xi + B_{W_i}u_i$$
$$y_i = C_{W_i}\xi + D_{W_i}u_i$$

In the sequel, we shall give a number of decoupling results for the above multi-objective $\mathcal{H}_\infty$ problems. First we shall give the results for a stable plant, which is extremely simple.

Theorem 1: *Consider the system (2). Assume that A is a stability matrix. Then, the following two statements are equivalent.*

(1) *There exists an internally stabilizing controller K such that, for each t_{ii},*

$$\|W_i t_{ii}\|_\infty < 1$$

(2) *For each t_{ii} there exists an internally stabilizing controller K such that*

$$\|W_i t_{ii}\|_\infty < 1$$

Remark 1: The significance of Theorem 1 is that just as much can be achieved by a single controller which controls *all* the t_{ii} as if the controller just had to control *one* of the t_{ii}. In fact, as is evident from the proof below, it is possible to design such a multiobjective $\mathcal{H}_\infty$ controller, by designing an $\mathcal{H}_\infty$ controller for each t_{ii}. □

Proof: Let the plant G be row partitioned as

$$G = \begin{pmatrix} g_1 \\ g_2 \\ \vdots \\ g_k \end{pmatrix}$$

Since G is stable, the YJBK parametrization of all stabilizing controllers (Youla *et al.* 1971) is simply given by

$$K = Q(I + GQ)^{-1},\ Q \in_{\mathcal{R}} \mathcal{H}_\infty,\ Q = K(I - GK)^{-1} \tag{3}$$

The transfer function from w to z becomes

$$T_{zw} = \begin{cases} I + GQ & \text{for Fig. 1} \\ GQ & \text{for Fig. 2} \\ Q & \text{for Fig. 3} \end{cases}$$

$$= \begin{cases} \begin{pmatrix} 1 + g_1q_1 & g_1q_2 & \cdots & g_1q_k \\ g_2q_1 & 1 + g_2q_2 & \cdots & g_2q_k \\ \vdots & \vdots & \ddots & \vdots \\ g_kq_1 & g_kq_2 & \cdots & 1 + g_kq_k \end{pmatrix} & \text{for Fig. 1} \\ \begin{pmatrix} g_1q_1 & g_1q_2 & \cdots & g_1q_k \\ g_2q_1 & g_2q_2 & \cdots & g_2q_k \\ \vdots & \vdots & \ddots & \vdots \\ g_kq_1 & g_kq_2 & \cdots & g_kq_k \end{pmatrix} & \text{for Fig. 2} \\ \begin{pmatrix} q_1 & q_2 & \cdots & q_k \end{pmatrix} & \text{for Fig. 3} \end{cases}$$

$$= \begin{pmatrix} t_{11} & t_{12} & \cdots & t_{1k} \\ t_{21} & t_{22} & \cdots & t_{2k} \\ \vdots & \vdots & \ddots & \vdots \\ t_{k1} & t_{k2} & \cdots & t_{kk} \end{pmatrix}$$

where Q has the following column partitioning:

$$Q = (q_1 \; q_2 \cdots q_k) \tag{4}$$

Now, the crucial observation is that since

$$t_{ii} = \begin{cases} 1 + g_i q_i & \text{for Fig. 1} \\ g_i q_i & \text{for Fig. 2} \\ e_i' q_i & \text{for Fig. 3} \end{cases} \tag{5}$$

each t_{ii} depend only on q_i. Since the q_i are free stable parameters, the optimization of the t_{ii} can be done completely independently, where after K is determined by (3). From this simple observation the claim becomes obvious.

Remark 2: An important observation, which can be made from the proof of Theorem 1, is that sensitivities, complementary sensitivities and control sensitivities can be mixed arbitrarily. Pairs of corresponding w_i and z_i can be chosen for $\mathcal{H}_\infty$ specifications from each of the above configurations in such a way that no pairs with the same numbering are chosen from any configuration. □

Remark 3: For a stable plant, it is trivial that selecting $K = 0$ satisfies the problems in Figs. 2 and 3. Hence, the corresponding optimization problems make sense only in combinations with sensitivity specifications following Fig. 1. □

In the next section, we shall provide a more general result, which incorporates all three types of specification.

From the proof of Theorem 1 it is apparent that an $\mathcal{H}_\infty$ controller K which satisfies any of the above multiobjective problems can be found by determining the q_i and then applying (3). Each of these k transfer matrices (columns) can be found by solving a scalar standard $\mathcal{H}_\infty$ problem based on (5). For example, for a sensitivity problem, each of the k associated standard problems based on (5) which in transfer function form is

$$\| W_i(1 + g_i q_i) \|_\infty < 1$$

has the following standard state space formulations:

$$\begin{aligned} \dot{x} &= \begin{pmatrix} A & O \\ 0 & A_{W_i} \end{pmatrix} x + \begin{pmatrix} 0 \\ B_{W_i} \end{pmatrix} w + \begin{pmatrix} B \\ 0 \end{pmatrix} u \\ z &= (e_i' C \;\; C_{W_i}) x + D_{W_i} w + e_i' D u \\ y &= (0 \;\; C_{W_i}) x + D_{W_i} w + 0 u \end{aligned}$$

3. Multiobjective control with simultaneous specifications for every transfer function

In the previous section, we were concerned with the problem of shaping just the diagonal entries in the (complementary or control) sensitivities. However, in a series of control problems, it is reasonable to include

(1) specifications for sensitivities, complementary sensitivities, and control sensitivities simultaneously and

(2) specifications for both diagonal and off-diagonal terms.

In a disturbance rejection problem, for instance, considering the diagonal terms only indicates that any of the disturbances is assumed to influence one output only (in an open *or* closed loop). This is not very realistic in most cases, and hence we have to specify the off-diagonal terms as well, which can be interpreted as the influence on one output from an output disturbance on another.

Moreover, if sensitivities are considered isolated, performance is achieved at the cost of robustness.

The approach taken below will use a technique similar to mixed-sensitivity $\mathcal{H}_\infty$ designs, where the design criteria are stacked. In a similar way to the mixed-sensitivity approach we can avoid conservatism only by selecting weight matrices in a clever way. This conservatism, however, will be the only one introduced, in contrast with most other approaches.

Loop shaping one of the columns of T_{zw} by specifying upper bounds for the modulus of its entries can be formulated as a standard $\mathcal{H}_\infty$ problem as follows.

Problem 2: *The* jth *single-input multiple-output (SIMO) problem for the configuration in Fig. 1 is said to be solvable if and only if there exists a controller* K *which internally stabilizes the plant and such that*

$$\left\| \begin{matrix} W^s_{1j} s_{1j} \\ \vdots \\ W^s_{kj} s_{kj} \\ W^t_{1j} t_{1j} \\ \vdots \\ W^t_{kj} t_{kj} \\ W^c_{1j} c_{1j} \\ \vdots \\ W^c_{kj} c_{kj} \end{matrix} \right\|_\infty < 1, \quad \text{where} \quad \begin{aligned} s_{ij}(\cdot) &= e_i^t (I + G(\cdot)K(\cdot)[I - G(\cdot)K(\cdot)]^{-1}) e_j \\ t_{ij}(\cdot) &= e_i^t G(\cdot)K(\cdot)[I - G(\cdot)K(\cdot)]^{-1} e_j \\ c_{ij}(\cdot) &= e_i^t K(\cdot)[I - G(\cdot)K(\cdot)]^{-1} e_j \end{aligned}$$

and $g_i(s)$ *is the row of transfer functions from* u *to* y_i. $W^s_{ij}(\cdot)$, $W^t_{ij}(\cdot)$, *and* $W^c_{ij}(\cdot)$ *are the weighting matrices for the* ijth *entry of the sensitivity* (s_{ij}), *the complementary sensitivity* (t_{ij}) *and the control sensitivity* (c_{ij}) *respectively.*

Remark 4: The three problems discussed in §2 can be obtained as special cases of Problem 2 by selecting the weights properly. For instance, by choosing $W^s_{ii}(\cdot)$ as weights for the sensitivities, $W^s_{ij}(\cdot) \equiv 0, i \neq j$, and $W^t_{ij}(\cdot) \equiv W^c_{ij}(\cdot) \equiv 0$, the sensitivity problem from §2 is re-obtained as a special case. □

Remark 5: Note that $s_{ij} = t_{ij}$, $i \neq j$. Hence, there is some redundancy in the set-up, which should be removed in implementations to save computational power. □

As a generalization of Theorem 1 the multivariable multiobjective problem will be solved by solving a series of SIMO problems, as demonstrated by the following result.

Theorem 2: *Consider the system (2). Assume that A is a stability matrix. Then, the following two statements are equivalent.*

(1) *There exists an internally stabilizing controller K such that*

$$\left\| \begin{matrix} W_{11}^s s_{11} \\ \vdots \\ W_{k1}^s s_{k1} \\ W_{11}^t t_{11} \\ \vdots \\ W_{k1}^t t_{k1} \\ W_{11}^c c_{11} \\ \vdots \\ W_{k1}^c c_{k1} \end{matrix} \right\|_\infty < 1, \ldots, \left\| \begin{matrix} W_{1j}^s s_{1j} \\ \vdots \\ W_{kj}^s s_{kj} \\ W_{1j}^t t_{1j} \\ \vdots \\ W_{kj}^t t_{kj} \\ W_{1j}^c c_{1j} \\ \vdots \\ W_{kj}^c c_{kj} \end{matrix} \right\|_\infty < 1, \ldots, \left\| \begin{matrix} W_{1k}^s s_{1k} \\ \vdots \\ W_{kk}^s s_{kk} \\ W_{1k}^t t_{1k} \\ \vdots \\ W_{kk}^t t_{kk} \\ W_{1k}^c c_{1k} \\ \vdots \\ W_{kk}^c c_{kk} \end{matrix} \right\|_\infty < 1, \tag{6}$$

in the closed-loop system simultaneously.

(2) *Each of the m SIMO problems from Problem 2 is solvable independently.*

Proof: Following the line of proof of Theorem 1, we utilize the fact that

$$\begin{pmatrix} I + GK(I - GK)^{-1} \\ GK(I - GK)^{-1} \\ K(I - GK)^{-1} \end{pmatrix} = \begin{pmatrix} I \\ 0 \\ 0 \end{pmatrix} + \begin{pmatrix} G \\ G \\ I \end{pmatrix} K(I - GK)^{-1} = \begin{pmatrix} I \\ 0 \\ 0 \end{pmatrix} + \begin{pmatrix} G \\ G \\ I \end{pmatrix} Q$$

and hence

$$W_{ij}^s(\cdot) s_{ij}(\cdot) = W_{ij}^s(\cdot)\delta_{ij} + e_i W_{ij}^s(\cdot) G(\cdot) q_j(\cdot)$$

Consequently, the huge composite stacked problem can be solved columnwise, thus avoiding conservatism, and making weight selection more transparent. □

The main significance of Theorem 2 is described in terms of the following corollary.

Corollary 3: *Let K be given, satisfying (6). Then*

$$\| W_{ij}^s(\cdot) s_{ij}(\cdot) \|_\infty < 1, \ \| W_{ij}^t(\cdot) t_{ij}(\cdot) \|_\infty < 1, \ \| W_{ij}^c(\cdot) c_{ij}(\cdot) \|_\infty < 1, \ \forall i,j$$

Remark 6: Corollary 3 shows that each transfer function is optimized entrywise. This entrywise optimization does not introduce any conservatism, except that originating from stacking which can be avoided by cleverly, possibly iteratively, selecting the weights (such a scheme has been tested successfully in practice). □

Proof: The corollary is immediate from the theorem, upon noting that the $\mathcal{H}_\infty$ norm of a column of transfer functions being smaller than γ implies that each of its entries is smaller than γ. □

The design is done by finding an appropriate q_j for each SIMO problem, and then combining them all by (3).

4. Multiobjective control of general plants

It is possible to apply the multiobjective design method both to unstable plants and to design problems which are not based on sensitivity functions. This will be considered in the following.

4.1. *Unstable plants*

In general, the multiobjective control problem is much harder for an unstable plant than for a stable plant. Provided, however, that one output is available for stabilization only in the sense that no specifications are specific for that output, the results from above can be applied directly for unstable plants as well. To exemplify the procedure, let us consider a system described by

$$\begin{pmatrix} y_1 \\ y_2 \end{pmatrix} = \begin{pmatrix} G_1 \\ G_2 \end{pmatrix} u \tag{7}$$

where we apply the control law

$$u = (K_1 \;\; K_2) \begin{pmatrix} y_1 \\ y_2 \end{pmatrix}$$

Now, we have the following straightforward result.

Lemma 4: *Consider the system (7). Assume that K_2 stabilizes the plant, that is such that*

$$\tilde{G} = G_1(I - K_2G_2)^{-1}$$

is stable. Moreover, assume that $Q_1 \in \mathcal{RH}_\infty$ satisfies

$$\| W_1(\cdot) + W_1(\cdot)\tilde{G}(\cdot)Q_1(\cdot)\|_\infty < \gamma$$

Then one controller, satisfying

$$\| W_1(\cdot)S_1(\cdot)_{11\infty} < \gamma$$

is given by

$$K = (Q_1\left[I - G_1(I - K_2G_2)^{-1}Q_1\right]^{1} \quad K_2)$$

Proof: The lemma follows by elementary algebra, and by applying Theorem 1. □

Obviously, the principle from Lemma 4 can be extended to any number of outputs or inputs, applying the results regarding stable systems. Although all results previously given in the paper applies in this manner, we shall not give the results explicitly due to space limitations, since they are straightforward. It should be pointed out, however, that there is some restriction in the fact that one of the outputs is used for stabilization only, and it is not trivial to pose any specifications simultaneously for this output. In practice, it might not be reasonable to introduce an additional sensor or actuator just for this purpose. Hence, the method suggested in this paper applies mostly to stable plants, or to large-scale systems (such as power plants or chemical plants) equipped with internal stablizing loops.

4.2. *Multiobjective control for non-sensitivity specifications*

Let us consider a general four-block system (which is not assumed to be a weighted mixed-sensitivity problem) given by

$$\begin{pmatrix} z \\ y \end{pmatrix} = \begin{pmatrix} G_{zu} & G_{zu} \\ G_{yw} & G_{yu} \end{pmatrix} \begin{pmatrix} w \\ u \end{pmatrix} = G \begin{pmatrix} w \\ u \end{pmatrix}, \quad u = Ky \tag{8}$$

It is still possible to apply the multiobjective design method to the above system under some conditions. It turns out directly that we can use the YJBK parameterization in the same way as done in the above section if the open-loop system is stable and the inverse of G_{yw} (or G_{zu}) exists and is stable. We have then the following result.

Theorem 5: *Consider the system (8). Assume that G is stable, the inverse of G_{yw} exists and $G_{yw}^{-1} \in \mathcal{RH}_\infty$. Then the following two statements are equivalent.*

(1) *There exists an internally stabilizing controller K such that, for each t_{ii},*

$$\| W_i t_{ii} \|_\infty < 1$$

(2) *For each t_{ii} there exists an internally stabilizing controller K such that*

$$\| W_i t_{ii} \|_\infty < 1$$

Where t_{ii} is the closed loop transfer function from w_i to z_i.

Remark 7: Theorem 5 is generalization of Theorem 1. □

Proof: The proof of Theorem 5 follows directly the proof on Theorem 1. Let the G_{zu} be row partitioned as

$$G_{zu} = \begin{pmatrix} g_{zu,1} \\ g_{zu,2} \\ \vdots \\ g_{zu,k} \end{pmatrix}$$

Since the open loop is stable and the inverse of G_{yw} exists and is stable, the YJBK parametrization of all stabilizing controllers (Youla *et al.* 1971) is simply given by

$$K = (I + QG_{yw}^{-1}G_{yu})^{-1} QG_{yw}^{-1}, \; Q \in \mathcal{RH}_\infty, \; Q = K(I - G_{yu}K)^{-1} G_{yw} \tag{9}$$

The transfer function from w to z becomes

$$\begin{aligned} T_{zw} &= G_{zw} + G_{zu}Q \\ &= \begin{pmatrix} g_{zw,11} + g_{zu,1}q_1 & g_{zw,12} + g_{zu,1}q_2 & \cdots & g_{zw,1K} + g_{zu,1}q_k \\ g_{zw,21} + g_{zu,2}q_1 & g_{zw,22} + g_{zu,2}q_2 & \cdots & g_{zw,2k} + g_{zu,2}q_k \\ \vdots & \vdots & \ddots & \vdots \\ g_{zw,k1} + g_{zu,k}q_1 & g_{zw,k2} + g_{zu,k}q_2 & \cdots & g_{zw,kk} + g_{zu,k}q_k \end{pmatrix} \end{aligned}$$

where Q has the following column partitioning

$$Q = \begin{pmatrix} q_1 & q_2 & \cdots & q_k \end{pmatrix}$$

Now, the crucial observation is that since

$$t_{ii} = g_{zw,ii} + g_{zu,i}q_i$$

each t_{ii} depend only on q_i. Since the q_i are free stable parameters, the optimization of the t_{ii} can be done completely independently, whereafter K is determined by (9). From this simple observation the claim becomes obvious.

4.3. Mixed-norm multiobjective control problems

In order to approach the requirements met in applications, considerable recent research activity has been devoted to the issue of *mixed* problems, that is problems where the specifications for different transfer functions are posed in different norms.

Generally speaking, there are no easy solutions to such problems. For each combination of norms a dedicated research activity has to make specialized synthesis algorithms, and such problems will typically be *much* harder than each of the 'pure' problems.

However, using the simple idea in this paper, *arbitrary* specifications can be congregated. Moreover, the design methodologies are no more complex than for the corresponding 'pure' problems. The only restriction is that all specifications associated with one specific output† have to be posed in the same norm. That is cross-over terms have to be evaluated in the same norm as the corresponding sensitivity. Hence, for a diagonal sensitivity problem there are no restrictions at all.

A viable approach to a robust design for a servo problem could involve the following steps.

Algorithm 1:

Step 1. Introduce an internal loop to stabilize the system.

Step 2. Set up w_1 and z_1 such that the corresponding transfer functions is the sensitivity function associated with the servo error multiplied by a weighting. The weighting has to reflect the scheduled command signals for the system and would typically have a low-pass character.

Step 3. Set up w_2 and z_2 such that the corresponding transfer function matches the uncertainty model times a weighting function. For multiplicative uncertainty models, the transfer function will be a complementary sensitivity and, for additive uncertainties, it will be the control sensitivity. The weighting should reflect the model uncertainty and would typically possess a high-pass character.

Step 4. Transform the corresponding standard problem model into a model matching problem.

Step 5. Apply standard $\mathcal{H}_2$ optimization for the pair (w_1, z_1) (disregarding (w_2, z_2)) to obtain the controller q_1.

† All results in this paper are formulated for output sensitivities. Obviously, by duality the same results can be formulated for input sensitivities. Hence, one can choose to state a mixed problem with the same norms either for columns or for rows.

Step 6. Apply standard $\mathcal{H}_\infty$ optimization for the pair (w_2, z_2) (disregarding (w_1, z_1)) to obtain the controller q_2.

Step 7. Compute the final controller using (4) and (3).

This algorithm is a prototype algorithm in the sense that is might be customized in a vast number of directions.

(1) The $\mathcal{H}_2$ and $\mathcal{H}_\infty$ norm optimizations might be substituted by any design method that supports the standard problem framework. It might make perfect sense to formulate a servo problem in $\mathcal{L}_1$ regime.
(2) Cross-over terms might be included whenever appropriate.
(3) Altogether different specifications might be added.

5. Robust stability

One of the main reasons for using $\mathcal{H}_\infty$-norm-based optimization is that robust stability can be addressed. It is well known that 'one-loop-at-a-time' techniques might fail to alert the designer about robust stability problems. The approach presented above is somewhere in between full multivariable designs, and 'one-loop-at-a-time' designs. Hence, care has to be taken with respect to robust stability. Fortunately, most approaches to robust stability with respect to non-parametric uncertainties generalize without any effort to the multiobjective setting presented here.

Consider, for example, a class of systems $\hat{G}(\cdot)$ which is described by a multiplicative uncertainty:

$$\hat{G}(s) = [I + \Delta(s)W_T(s)]G(s) \tag{10}$$

where $G(\cdot)$ is the nominal plant, $W_T(\cdot)$ is the frequency structure of the uncertainty and Δ is a norm-bounded ($\|\Delta\|_\infty < 1$) unknown transfer function.

Applying the small-gain theorem, robust stability of the closed-loop system resulting from applying a controller $K(\cdot)$ to $\hat{G}(\cdot)$ is equivalent to

$$\| W_T(\cdot)G(\cdot)K(\cdot)[I - G(\cdot)K(\cdot)]^{-1}\|_\infty < 1 \tag{11}$$

Using the approach suggested above this can be translated into the optimization:

$$\left\| \begin{matrix} t_{1j}^W \\ \vdots \\ t_{kj}^W \end{matrix} \right\|_\infty < 1, \text{ where } t_{ij}^W(\cdot) = k^{1/2} e_i W_T G(\cdot) q_j$$

which guarantees that (11) is fulfilled. The same comments as above apply: to obtain a non-trivial controller ($K \neq 0$), sensitivity requirements should be included. Moreover, the multivariable approach could be conservative compared with (11).

The question is, however, how realistic it is at all to have full multivariable uncertainty descriptions such as (10). Although such uncertainty models are usually assumed in the literature, it still remains to be explained how such uncertainty descriptions can be obtained in practice. In applications, uncertainty descriptions will indeed often be formulated for each loop.

6. Controller orders

The main drawback of the methodology introduced in this paper, is that the controller orders tend to get unreasonable high as the number of states and/or inputs–outputs increases.

However, even for a system with just four states and three inputs–outputs, using first-order weights, the overall controller order could be as large as 37; each q_j would generically be of order $4 + 7 = 11$ (the order of the plane $+1$ weighting for the sensitivity $+3$ weightings for the complementary sensitivities $+3$ weightings for the control sensitivities). This would give a Q a order of $3 \times 11 = 33$ and, hence, K would be of order $33 + 4 = 37$.

Let us therefore stress at this point, that *the proposed method is unrealistic without model reduction.*

In case studies using the technique, good results have been obtained by applying optimal Hankel norm model reduction at each level instead of only reduction of the controller. That is, first each q_j is model reduced, and then Q is formed from the reduced q_j and reduced. Finally, K is recovered from Q and model reduced as well. The reasons for taking this route are mainly numerical.

Alternatively, using constrained optimization techniques, for example in an LMI formulation, the solution can be found directly with the desired order. This has the advantage that it is not necessary to re-evaluate the design objectives for possible violations due to the model reduction steps.

7. Example

The method presented in this paper has been successfully applied to a laboratory scale model of a hot-rolling steel mill. The laboratory model has two dc motor actuators illustrating the speed and pressure actuators at the mill. The motors are moving an elastic belt which rotate a light wheel mounted on a heavy jockey which is suspended in a spring. The rotational speed of the wheel and its vertical position can be measured. These variables (referred to below as 'speed' and 'tension') represent the production speed and the tension of the steel slab respectively. The system is extremely oscillatory because of the suspension and the flexibility of the belt. It is highly time varying owing to belt ageing and temperature dependence (and because the motors warm up, but that is a less significant factor).

The control objectives are to get rid of output disturbances using a single controller that operates under all times variations.

An identification procedure yielded the following state space model:

$$\dot{x} = Ax + Bu$$
$$y = Cx$$

where

$$A = \begin{pmatrix} -0{\cdot}5500 & 29{\cdot}0513 & -0{\cdot}1786 & 5{\cdot}6206 & -2{\cdot}0999 & -2{\cdot}4016 & -22{\cdot}9655 \\ -16{\cdot}4444 & -0{\cdot}0116 & 0{\cdot}9400 & -59{\cdot}1677 & 23{\cdot}7574 & -5{\cdot}7259 & 0{\cdot}3384 \\ -0{\cdot}1292 & -1{\cdot}0611 & -1{\cdot}6313 & 10{\cdot}6938 & 26{\cdot}4404 & -4{\cdot}9794 & -11{\cdot}6464 \\ 0{\cdot}3664 & 0{\cdot}5840 & -0{\cdot}2406 & -16{\cdot}0509 & 6{\cdot}5610 & 35{\cdot}3381 & 103{\cdot}0935 \\ -0{\cdot}1582 & -0{\cdot}1027 & -1{\cdot}7638 & -2{\cdot}5377 & -13{\cdot}9180 & 59{\cdot}4749 & -41{\cdot}2525 \\ 0{\cdot}0098 & 0{\cdot}0224 & -0{\cdot}5422 & -4{\cdot}9886 & -7{\cdot}5207 & -2{\cdot}8533 & -16{\cdot}0967 \\ 0{\cdot}0829 & -0{\cdot}0044 & 0{\cdot}2359 & -4{\cdot}3071 & 3{\cdot}3372 & -0{\cdot}2006 & 2{\cdot}5741 \end{pmatrix}$$

$$B = \begin{pmatrix} 2{\cdot}1741 & -2{\cdot}4536 \\ 2{\cdot}5215 & -2{\cdot}6740 \\ 1{\cdot}4914 & 1{\cdot}6399 \\ -0{\cdot}6920 & 1{\cdot}7869 \\ 1{\cdot}9558 & 0{\cdot}7342 \\ 0{\cdot}5524 & 0{\cdot}6408 \\ -0{\cdot}4062 & 0{\cdot}2454 \end{pmatrix}$$

$$C = \begin{pmatrix} -0{\cdot}1902 & 0{\cdot}4414 & 0{\cdot}0034 & 0{\cdot}5654 & -0{\cdot}2501 & 0{\cdot}0047 & -0{\cdot}4066 \\ 0{\cdot}0146 & -0{\cdot}0022 & 0{\cdot}3138 & -0{\cdot}2287 & -0{\cdot}4905 & 0{\cdot}4653 & 0{\cdot}0902 \end{pmatrix}$$

An uncertainty description was obtained by repeating the identification experiment under various operating conditions, that is with new and worn belts, and in different temperature environments. Comparing the models, a multiplicative uncertainty model was constructed.

An experimental set-up introducing two output disturbances were designed with a square wave disturbance for the tension and a sine wave (at a different frequency) as a disturbance for the speed. Several design methods were tested for this plant.

A few methods based on sufficient conditions for robust performance were tested. In summary, these methods let to designs that were too conservative or they were discarded because the weight selection was too complex.

A mixed-sensitivity design gave reasonable results, but diagonal weightings did still make the optimization stop in an undesired way, and unfortunately there do not exist systematic methods for choosing non-diagonal weightings.

It was therefore conjectured that multiobjective sensitivity synthesis could improve on the design which turned out to be true in practice.

The approach taken was to specify

(1) a sensitivity for the tension that gave steady-state tracking and got rid of some of the natural oscillations,

(2) a sensitivity for the tension that gave sufficient bandwidth and steady-state tracking (this variable was not oscillatory),

(3) complementary sensitivities for these two variables based on the uncertainty model and

(4) cross-over functions with the same weightings as the sensitivities.

Figure 4 shows the result of the optimization. The solid curves are the closed loop sensitivities and complementary sensitivities. The dotted curves are the inverses of the weightings. The vertical lines mark the nominal value of the frequency of the natural oscillations. The weighting for the tension sensitivity specifies steady-state performance and some damping of the natural frequency. This was done by sacrificing performances at frequencies in between. Robustness was introduced by the weightings of the complementary sensitivities, which are based on multiplicative uncertainty descriptions. In fact, this approach does not theoretically guarantee robust performance or even stability (see §5) but it worked in practice which was more important. The cross-overs (now shown) were very small.

The controller was model reduced to tenth order using the optimal Hankel norm approximation. This did not cause the performance to deteriorate significantly (some effect can be seen in the tension sensitivity plot). The controller was implemented using a digital signal processor, and a series of data was recorded under varying working conditions. A typical plot is shown in Fig. 5.

The performance was slightly better than the existing design, and it was far more robust with respect to time variations. It can be seen that there are some oscillations at the natural frequency (22 rad s^{-1}) and some oscillations which are a little slower owing to the trade-off mentioned above. The steady-state tracking properties are quite good. Finally, the cross-over effects, that is the influence of the square wave on the speed and of the sine wave on the tension are almost negligible. This is a highly desirable feature in hot strip steel rolling.

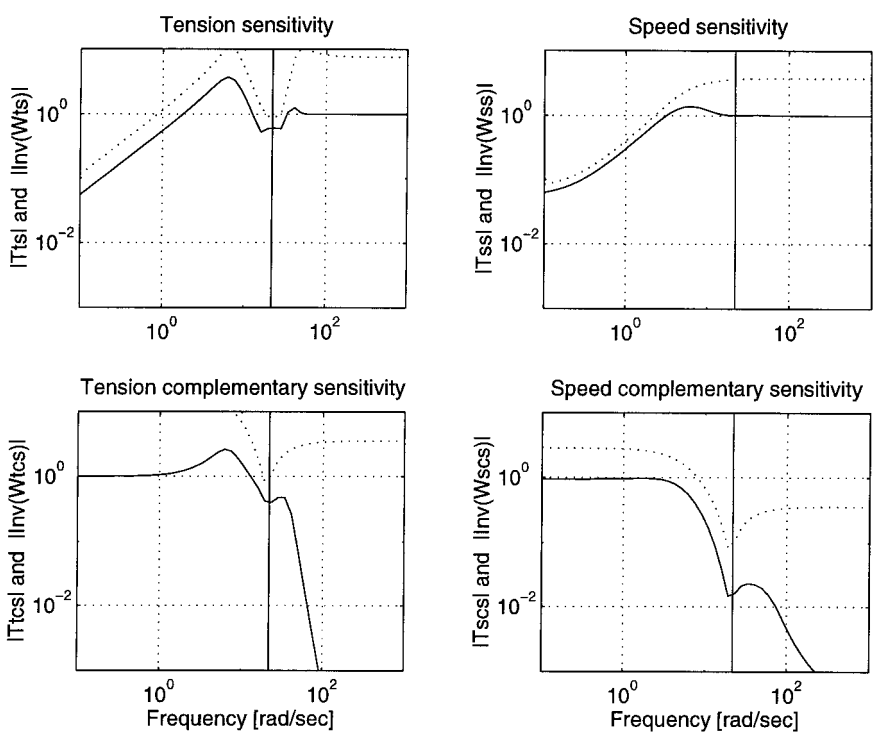

Figure 4. Sensitivities and complementary sensitivities for laboratory model.

The weighting selections shown were the first guesses based on the design specifications, on the uncertainty model and on a reasonable knowledge of the plant. It was possible to improve slightly on the design by iterating on the weights, but the first design did sufficiently well.

8. Conclusions

A series of multiobjective $\mathcal{H}_\infty$ design problems have been considered in this paper. It has been shown how it is possible to decouple exactly a number of $\mathcal{H}_\infty$ design problems based on weighted output sensitivity functions, complementary sensitivity functions and control sensitivity functions.

Further, the derived design approach works equally well for continuous- or discrete-time systems and has also been extended to handle sampled-data systems. Finally, the multiobjective $\mathcal{H}_\infty$ design approach has been successfully applied for the design of a miniature model of a hot-rolling steel mill. Stoustrup *et al.* (1995) applied the design aproach for roll damping of a ship by rudder control.

As shown in §4.1, the derived design approach can also in some cases handle unstable systems. In this case we need to use one or more outputs to stabilize the system. As a consequence of this, the number of allowable $\mathcal{H}_\infty$ design requirements is reduced.

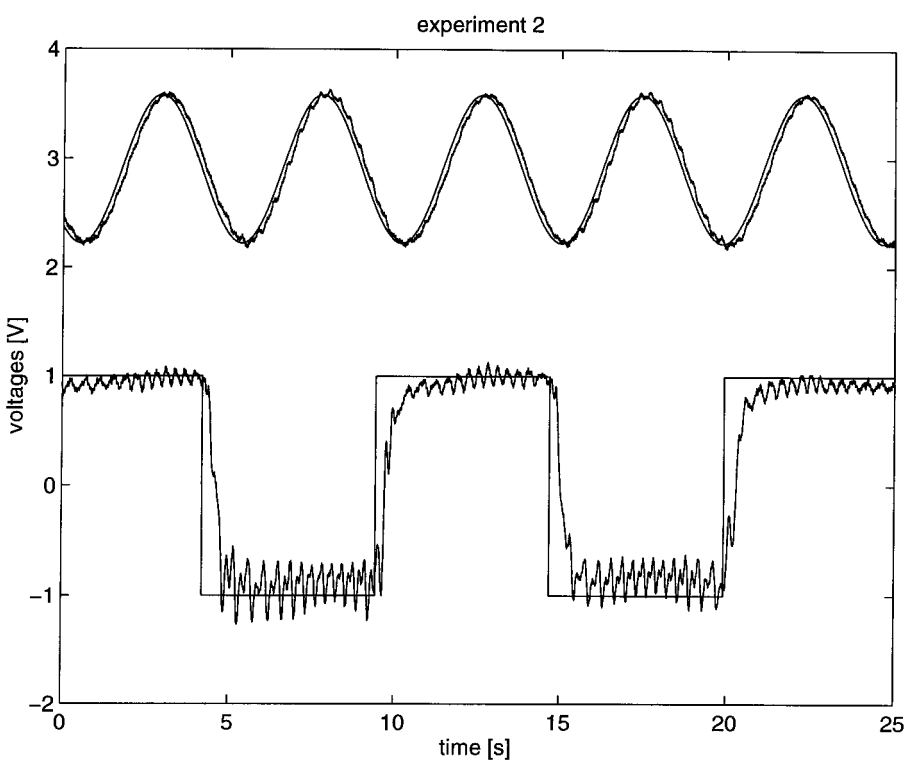

Figure 5. Reference signals and experimental data.

If only one requirement is formulated for each output, the suggested approach is non-conservative. For the mixed-sensitivity cases, our approach is less conservative than full multivariable designs.

Only sensitivity functions at the outputs have been considered in this paper. However, by duality, all methods given can be used also for input sensitivities without any modifications. In this connection, it should be noted, however, that unfortunately it is not straightforward to combine sensitivity functions from both the input and the output point in this multiobjective $\mathcal{H}_\infty$ approach and still obtain decoupling.

The coupled $\mathcal{H}_\infty$ design problems need not be based on different types of weighted sensitivity function only. It is possible to make a minor generalization of the above $\mathcal{H}_\infty$ aproach to handle non-sensitivity problems, for example to handle explicitly actuator and sensor dynamics. This induces, however, certain rank and minimum phase conditions on some of the transfer functions in the resulting four-block problem.

We believe that our approach is feasible for combination with recent research activities in automatic weight selection schemes, since the problem set-up makes the influence of weights very intuitive and transparent.

Finally, the approach is straightforwardly extendable to meet mixed-norm specifications, such as $\mathcal{H}_2/\mathcal{H}_\infty$, $\mathcal{L}_1/\mathcal{H}_\infty$, etc. The only restriction is that all specifications associated with one specific output (or dually an input) has to be posed in the same norm.

Acknowledgment

This work was suported by the Danish Technical Research Council under Grant No. 95-00765.

References

Dorato, P., 1991, A survey of robust multiobjective design techniques. *Control of Uncertain Dynamic Systems*, edited by S. P. Battacharyya and L. H. Kell (Boco Raton, Florida, U.S.A.: CRC Press), pp. 249–259.

Elia, N., and Dahleh, M. A., 1994, Controller design with multiple objectives. *Proceedings of the American Control Conference*, Baltimore, Maryland, U.S.A., p. 1603–1607.

Khargonekar, P. P., and Rotea, M. A., 1991, Mixed $\mathcal{H}_2/\mathcal{H}_\infty$ control: a convex optimization approach. *IEEE Transactions on Automatic Control,* **37**, 824–837.

Khargonekar, P. P., Rotea, M. A., and Sivashankar, N., 1993, Exact and approximate solutions to a class of multiobjective control synthesis problems. *Proceedings of the American Control Conference*, San Francisco, California, U.S.A., pp. 1602–1606.

Niemann, H. H., Søgaard-Andersen, and Stoustrup, J., 1993, $\mathcal{H}_\infty$ optimization of the recovery matrix. *Control—Theory and Advanced Technology*, **9**, 547–564.

Nobuyama, E., and Khargonekar, P. P., 1995, A generalization in mixed $\mathcal{H}_2/\mathcal{H}_\infty$ control with state feedback. *Systems and Control Letters*, **25**, 289–293.

Rotea, M. A., and Prasanth, R. K., 1994, The ρ performance measure: a new tool for controller design with multiple frequency domain specifications. *Proceedings of the American Control Conference*, Baltimore, Maryland, U.S.A., pp. 430–434.

Saberi, B., Chen, M., and Sannuti, P., 1993, *Loop Transfer Recovery: Analysis and Design* (Berlin: Springer-Verlag).

Stoustrup, J., Niemann, H. H., and Blanke, M., 1995, A multiobjective $\mathcal{H}_\infty$ solution to the rudder roll damping problem. *Proceedings of the IFAC Workshop on Control Applications in Marine Systems CAMS*, Norway, pp. 238–246.

SZNAIER, M., 1994 a, Mixed $l_1/\mathcal{H}_\infty$ controllers for SISO discrete time systems. *Systems and Control Letters,* **23**, 179–186; 1994 b, An exact solution to SISO mixed $\mathcal{H}_2/\mathcal{H}_\infty$ problems via convex optimization. *IEEE Transactions on Automatic Control*, **39**, 2511–2516.

VAN DIGGELEN, F., and GLOVER, K., 1994, State-space solutions to Hadamard weighted $\mathcal{H}_\infty$ and $\mathcal{H}_2$ control problems. *International Journal of Control*, **59**, 357–394.

YOULA, D. C., JABR, H. A., and BONGIORNO, J. J., 1971, Modern Wiener–Hopf design of optimal controllers, Part II. *IEEE Transactions on Automatic Control*, **21**, 319–338.