Optimal Input Strategy for Plug and Play Process Control Systems

Kragelund, Martin Nygaard; Leth, John-Josef; Wisniewski, Rafal

Published in:
I E E E Conference on Decision and Control. Proceedings

DOI (link to publication from Publisher):
10.1109/CDC.2010.5718092

Publication date:
2010

Document Version
Accepted author manuscript, peer reviewed version

Optimal Input Strategy for Plug and Play Process Control Systems

Martin Kragelund, John Leth, and Rafał Wisniewski

***Abstract*— This paper considers the problem of optimal operation of a plant, which goal is to maintain production at minimum cost. The system considered in this work consists of a joined plant and redundant input systems. It is assumed that each input system contributes to a flow of goods into the joined part of the plant where the commodities (outputs) are produced. A profit function with a certain regular structure is defined for such a plant. Then the profit is maximized subject to tracking of a given reference production. The work shows whether a new input ought to be included in the system to improve the performance of the plant. The results are applied to a coal fired power plant where an additional new fuel system, gas, becomes available.**

I. Introduction

The Plug and Play Process Control (P3C) project deals with automatic reconfiguration of a control system when new hardware and/or subsystems are added to an existing system [1], [2] and [3]. This includes detecting new hardware/subsystem, establishing its origin, incorporating it into control, and ensuring optimal operation. All of these tasks are important considerations. In this work we answer the question which and when additional hardware is to be added to a plant.

Previous work has shown that economics is an important factor when configuring, instrumenting and operating a system, i.e., a company will not implement new hardware unless it will profit from this. Optimal steady state consideration has been presented in [4]. There it is assumed that the controlled plant quickly obtains its new steady state and therefore it is possible to neglect dynamics. Often the main concern for optimization is the operational cost [5], which usually involves the integral over time of some function dependent on the current system configuration/instrumentation and state variables.

As the profit depends on the current system configuration it is impossible to predict which new hardware or subsystems should be plugged into an existing plant. Our approach for identifying the need for new hardware is to model all the given possibilities, then calculate and compare the profits of the plants having these different hardware configurations. The configuration giving the largest profit should be implemented.

In this work we use a power plant capable of using different fuel systems as an example and the objective is to find the optimal configuration of these fuel systems. With this objective in mind we formulate a profit function, which is adopted from our earlier work [6], [7], where the fuel systems consist of coal, gas, and oil. In short, the argument of the profit function is the supply rates of different fuels with an additional reference tracking constraint. Dynamics of the fuel supply and reference tracking have been incorporated in the profit maximization in [8], [9], [10]. These studies conclude that a plant using multiple fuels yields a greater profit during a day than a plant using only coal. This is a surprising result in the light that coal is the cheapest fuel.

The different fuel systems in the power plant could be thought of as different power plants capable of using only one fuel each. The reason for this attribute is the plant model, which is block diagonal, and the business objective model, which sums the objectives of the individual fuel system. Basically, this work has two important practical contributions. The first is to show how inexpensive fuels can be efficiently used for electricity production. The second is an algorithm that quickly and cheaply brings the production to the demanded level.

A. Outline

The control problem is formulated in Section II, wherein we introduce the studied generic plant, the mathematical structure of the objective function and the optimization problem. In Section III optimization is carried out using Pontryagin's maximum principle. For this the input set is defined, which guarantees tracking of the reference signal. In Section IV the results of this work is applied to an example consisting of a power plant capable of using multiple fuels. Finally in Section V some conclusions and suggestions for future work is given.

II. Problem Formulation

In this section we will formulate the problem of profit maximization of a plant, which uses several input systems. The problem formulated in [10] will be used, however, the specification of the number of input systems will be removed. Thereby this work will allow for adding new input systems to the plant as they become available[1].

This work is supported by The Danish Research Council for Technology and Production Sciences.

The second author is financed by The Danish Council for Technology and Innovation.

The authors are all with the Department of Electronic Systems, Aalborg University, Fredrik Bajers Vej 7C, 9220 Aalborg Ø, Denmark {mkr, jjl, raf}@es.aau.dk

[1]Here we use the term 'become available' in the sense that new input systems/hardware are developed.

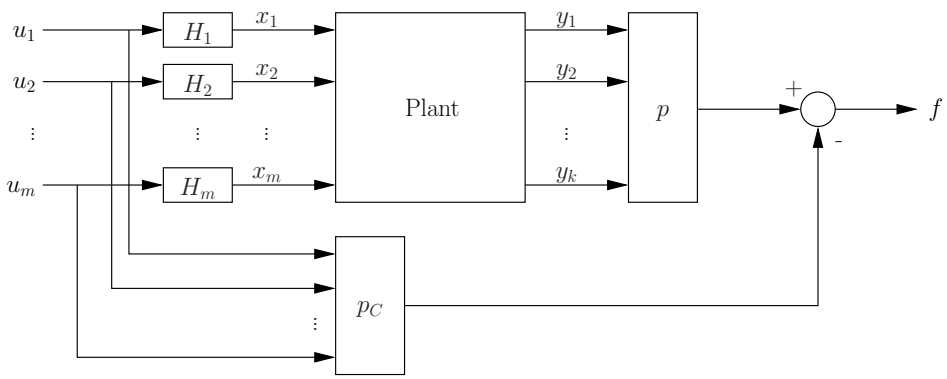

Fig. 1. Illustration of the type of plants, which are considered in this work. It is assumed that the dynamics only influence the maps, H_i, which each takes the input, u_i, to the output, x_i. The output, x_i, describes the flow of good into the plant, which delivers the objective output, y_j.

A block diagram of the considered system is depicted in Figure 1. It is assumed that the plant converts a flow of goods, x, into a number of output commodities, y. Thereby the plant is modeled as an affine map and the dynamics is only present in the input system model, $H = \{H_1, \dots, H_m\}$. We will assume that the complete system dynamics can be described by a block diagonal linear system, i.e., the different input systems are decoupled as depicted in Figure 1.

Therefore, the complete system dynamics of the input systems (H) is described as the following linear system

$$\begin{aligned} \dot{\boldsymbol{z}}(t) &= \boldsymbol{A}\boldsymbol{z}(t) + \boldsymbol{B}\boldsymbol{u}(t) \\ \boldsymbol{x}(t) &= \boldsymbol{C}\boldsymbol{z}(t), \end{aligned} \tag{1}$$

where $\boldsymbol{z} = (\boldsymbol{z}_1, \boldsymbol{z}_2, \dots, \boldsymbol{z}_m) \in \mathbb{R}^{n_1} \times \cdots \times \mathbb{R}^{n_m}$, $\boldsymbol{z}_i \in \mathbb{R}^{n_i}$, is the state vector of the m different input systems, $\boldsymbol{x} \in \mathbb{R}^m$ is the flow of goods from the different input systems into the plant, $\boldsymbol{u} = (u_1, u_2, \dots, u_m) \in \mathbb{R}^m$ is the control input to the different input systems, and the system matrices are given as

$$\boldsymbol{A} = \begin{bmatrix} \boldsymbol{A}_1 & \boldsymbol{0} & \dots & \boldsymbol{0} \\ \boldsymbol{0} & \boldsymbol{A}_2 & \ddots & \vdots \\ \vdots & \ddots & \ddots & \boldsymbol{0} \\ \boldsymbol{0} & \dots & \boldsymbol{0} & \boldsymbol{A}_m \end{bmatrix},$$

$$\boldsymbol{B} = \begin{bmatrix} \boldsymbol{B}_1 & \boldsymbol{0} & \dots & \boldsymbol{0} \\ \boldsymbol{0} & \boldsymbol{B}_2 & \ddots & \vdots \\ \vdots & \ddots & \ddots & \boldsymbol{0} \\ \boldsymbol{0} & \dots & \boldsymbol{0} & \boldsymbol{B}_m \end{bmatrix},$$

$$\boldsymbol{C} = \begin{bmatrix} \boldsymbol{C}_1 & \boldsymbol{0} & \dots & \boldsymbol{0} \\ \boldsymbol{0} & \boldsymbol{C}_2 & \ddots & \vdots \\ \vdots & \ddots & \ddots & \boldsymbol{0} \\ \boldsymbol{0} & \dots & \boldsymbol{0} & \boldsymbol{C}_m \end{bmatrix},$$

with $\boldsymbol{A}_i \in \mathbb{R}^{n_i \times n_i}$, $\boldsymbol{B}_i \in \mathbb{R}^{n_i \times 1}$, and $\boldsymbol{C}_i \in \mathbb{R}^{1 \times n_i}$ matrices describing the dynamics of the different input systems.

Each of the outputs, y_i, which is flow of product from the plant, is given a price, p_i, and each of the goods flowing into the plant is given prices, q_i. To formulate the growth of profit we introduce following notation. For $[y_{ji}] \in \mathbb{R}^{nm}$ let

$$y_{j*} = \sum_{i=1}^{m} y_{ji}$$
$$y_{*i} = \sum_{j=1}^{n} y_{ji}$$

The growth of profit for the plant is then given by

$$f(\boldsymbol{z}, t) = \boldsymbol{p}(t)^T \boldsymbol{y}(\boldsymbol{z}, t) - \boldsymbol{q}^T \boldsymbol{C}\boldsymbol{z},$$

where

$$\begin{aligned} \boldsymbol{p}(t) &= (p_1(t), p_2(t), \dots, p_k(t)), \\ \boldsymbol{q} &= (q_1, q_2, \dots, q_m), \\ \boldsymbol{y}(\boldsymbol{z}, t) &= (y_{1*}(\boldsymbol{z}, t), y_{2*}(\boldsymbol{z}, t), \dots, y_{k*}(\boldsymbol{z}, t)), \\ y_{ji}(\boldsymbol{z}_i, t) &= \boldsymbol{\Theta}_{ji}(t)^T \boldsymbol{z}_i + \varphi_{ji}(t), \end{aligned} \tag{2}$$

where $\boldsymbol{\Theta}_{ji}(t)$ and $\varphi_{ji}(t)$ model the plant production of commodities. Note that the unit of f is currency per time unit, e.g. dkk/s in this paper.

The problem is now to maximize the profit over some time horizon, T, i.e., the optimization problem is stated as

$$\begin{aligned} \max_{\boldsymbol{u}(t) \in U} \quad & \int_0^T f(\boldsymbol{z}, t) dt \\ \text{subject to} \quad & \dot{\boldsymbol{z}}(t) = \boldsymbol{A}\boldsymbol{z}(t) + \boldsymbol{B}\boldsymbol{u}(t), \end{aligned} \tag{3}$$

where the input space is given by

$$U = \{\boldsymbol{u} \in \mathbb{R}^m_+ | \boldsymbol{u} \leq \boldsymbol{c}_u\}, \tag{4}$$

with the elements of $\boldsymbol{c}_u$ being the maximum flow of goods for the different input systems. The inequality in (4) is read element-wise and thus U is a polyhedral set.

Furthermore, a constraint is imposed in the optimization as it is desired that one of the outputs tracks a production reference, $y_r(t)$. This is formulated in the next section.

III. Optimization

In this section a solution to the optimization problem in (3) is calculated. For this purpose a solution strategy similar to [10] is proposed, where a reference tracking controller for the system in (1) is designed such that the reference, $y_r(t)$, is followed. Thereafter, the optimization problem is modified to include the reference tracking and subsequently Pontryagin's maximum principle is applied to obtain optimal solution candidates.

A. Reference Tracking

We design a reference tracking controller, which results in a modified input set, i.e., U in the maximization problem (3) is replaced by a time-varying input set, $U(t)$, defined later in this section.

The reference tracking controller is constructed such that one of the outputs, e.g. $y_{1*}(\boldsymbol{z}(t),t)$, tracks a production reference $y_r(t)$.

In this work it is assumed that the different input systems have equal relative degree δ (for definition of the relative degree see [11], [12]). Now let $\boldsymbol{e} = (e_1, e_2, \ldots, e_\delta)$ be the tracking error defined by

$$\begin{aligned}
e_1 &= y_{1*} - y_r = \sum_{i=1}^{m} \left(\boldsymbol{\Theta}_{1i}(t)^T \boldsymbol{z}_i(t) + \varphi_i(t)\right) - y_r(t) \\
e_2 &= \dot{e}_1 = \frac{d}{dt} \sum_{i=1}^{m} \left(\boldsymbol{\Theta}_{1i}(t)^T \boldsymbol{z}_i(t) + \varphi_i(t)\right) - y_r^{(1)}(t) \\
&\vdots \\
e_\delta &= \dot{e}_{(\delta-1)} = \frac{d^{\delta-1}}{dt^{\delta-1}} \sum_{i=1}^{m} \Big(\boldsymbol{\Theta}_{1i}(t)^T \boldsymbol{z}_i(t) \\
&\qquad + \varphi_i(t)\Big) - y_r^{(\delta-1)}(t),
\end{aligned}$$

where, in generic notation, $h^{(k)}(t)$ denotes the k'th time derivative of the function $h(t)$. For later reference the standard convention $h^{(0)}(t) = h(t)$ is used.

Note that we may consider $\boldsymbol{e}$ as a function of $\boldsymbol{z}$ and t, by substituting for $\boldsymbol{z}_i^{(k)}$ an expression containing only the state $\boldsymbol{z}_i$ by using the dynamical system (1) (and time derivatives thereof).

The error dynamics can thus be written as

$$\left.\begin{aligned}
\dot{e}_1 &= e_2 \\
\dot{e}_2 &= e_3 \\
&\vdots \\
\dot{e}_\delta &= \frac{d^\delta}{dt^\delta} \sum_{i=1}^{m} \left(\boldsymbol{\Theta}_{1i}(t)^T \boldsymbol{z}_i(t) + \varphi_i(t)\right) - y_r^{(\delta)}(t),
\end{aligned}\right\} \quad (5)$$

and hence by introducing the auxiliary control input

$$v = \frac{d^\delta}{dt^\delta} \sum_{i=1}^{m} \left(\boldsymbol{\Theta}_{1i}(t)^T \boldsymbol{z}_i(t) + \varphi_i(t)\right) - y_r^{(\delta)}(t) \quad (6)$$

the error dynamics given by (5) becomes an integrator of order δ with v as an input. A feedback controller $\boldsymbol{K}$, for the system in (5) with v as input, is then designed such that $v = \boldsymbol{K}\boldsymbol{e}$ drives the error to zero.

The expression in (6) can be rewritten using the Liebnitz's rule for derivatives of products, i.e.,

$$\begin{aligned}
v =& \frac{d^\delta}{dt^\delta} \sum_{i=1}^{m} \left(\boldsymbol{\Theta}_{1i}(t)^T \boldsymbol{z}_i(t) + \varphi_i(t)\right) - y_r^{(\delta)}(t) \\
=& \sum_{i=1}^{m} \left(\sum_{k=0}^{\delta} \boldsymbol{\Theta}_{1i}^{(\delta-k)}(t)^T \boldsymbol{z}_i^{(k)}(t) + \varphi_i^{(\delta)}(t) \right) - y_r^{(\delta)}(t) \\
=& \sum_{i=1}^{m} \left(\sum_{k=0}^{\delta-1} \boldsymbol{\Theta}_{1i}^{(\delta-k)}(t)^T \boldsymbol{z}_i^{(k)}(t) + \boldsymbol{\Theta}_{1i}(t)^T \boldsymbol{z}_i^{(\delta)}(t) \right) \\
&\qquad + \sum_{i=1}^{m} \varphi_i^{(\delta)}(t) - y_r^{(\delta)}(t) \\
=& \sum_{i=1}^{m} \Big(Q_i(\boldsymbol{z}_i(t)) + \boldsymbol{\Theta}_{1i}(t)^T \left(\boldsymbol{A}_i^\delta \boldsymbol{z}_i(t) + \boldsymbol{A}_i^{\delta-1} \boldsymbol{B}_i u_i(t) \right) \Big) \\
&\qquad + \sum_{i=1}^{m} \varphi_i^{(\delta)}(t) - y_r^{(\delta)}(t),
\end{aligned} \quad (7)$$

where $Q_i(\boldsymbol{z}_i(t)) = \sum_{k=0}^{\delta-1} \boldsymbol{\Theta}_{1i}^{(\delta-k)}(t)^T \boldsymbol{z}_i^{(k)}(t)$ does not depend explicit on $\boldsymbol{u}(t)$ as a relative degree of δ is assumed.

Substituting $\boldsymbol{K}\boldsymbol{e}$ for v in the right hand side of (7) and then solving for $\boldsymbol{u}(t)$ we obtain, for each time t, a set of feasible inputs, $U(t)$, defined by

$$\begin{aligned}
U(t) =& \Big\{ \boldsymbol{u} \in U \mid \sum_{i=1}^{m} \boldsymbol{\Theta}_{1i}(t)^T \boldsymbol{A}_i^{\delta-1} \boldsymbol{B}_i u_i = y_r^{(\delta)}(t) \\
&- \sum_{i=1}^{m} \left(\boldsymbol{\Theta}_{1i}(t)^T \boldsymbol{A}_i^\delta \boldsymbol{z}_i(t) - \varphi_i^{(\delta)}(t) - Q_i(\boldsymbol{z}_i(t)) \right) \\
&+ \boldsymbol{K}\boldsymbol{e}(\boldsymbol{z}_i(t), t) \Big\},
\end{aligned} \quad (8)$$

which guarantees tracking of the reference, $y_r(t)$.

In summary, if the optimal control problem given by (3) is to be solved with the additional constraint of reference tracking one needs to replace the input set U by the time varying $U(t)$.

To obtain a solution which reflects the ratio of each input system in the optimal input strategy, we introduce a new parameter,

$$\boldsymbol{\alpha} = (\alpha_1, \alpha_2, ..., \alpha_m),\ \alpha_i \geq 0,\ \sum_{i=1}^{m} \alpha_i = 1.$$

It is then possible to reformulate the problem in (3) such that the requirement $u \in U(t)$ is included in the dynamics. That is, if we use the identity

$$u_i(t) = \frac{\alpha_i g(\boldsymbol{z}(t), t)}{\boldsymbol{\Theta}_{1i}(t)^T \boldsymbol{A}_i^{\delta-1} \boldsymbol{B}_i},$$

where

$$\begin{aligned}
g(\boldsymbol{z}, t) = y_r^{(\delta)}(t) - \sum_{i=1}^{m} \Big(&\boldsymbol{\Theta}_{1i}(t)^T \boldsymbol{A}_i^\delta \boldsymbol{z}_i - \varphi_i^{(\delta)}(t) \\
&- Q_i(\boldsymbol{z}_i) \Big) + \boldsymbol{K}\boldsymbol{e}(\boldsymbol{z}, t),
\end{aligned}$$

and consider $\boldsymbol{\alpha}$ as a new input, we obtain the following maximization problem

$$\begin{aligned} \max_{\boldsymbol{\alpha}\in\Omega(t)} \quad & \int_0^T f(\boldsymbol{z},t)dt \\ \text{subject to} \quad & \dot{\boldsymbol{z}}(t) = \boldsymbol{A}\boldsymbol{z}(t) + \boldsymbol{B}\boldsymbol{\Upsilon}(\boldsymbol{\alpha})\boldsymbol{G}(\boldsymbol{z}(t),t), \end{aligned} \tag{9}$$

where

$$\begin{aligned} \Omega(t) =& \Big\{\alpha \in \mathbb{R}_+^m \mid \sum_{i=1}^m \alpha_i = 1, \\ & \big[g(\boldsymbol{z}(t),t)\left(\boldsymbol{\Theta}_{1*}(t)^T\boldsymbol{A}^{\delta-1}\boldsymbol{B}\right)^{-1}\boldsymbol{\alpha}\big] \in U\Big\} \\ \boldsymbol{\Upsilon}(\boldsymbol{\alpha}) =& \text{diag}(\alpha_1,\alpha_2,...,\alpha_m), \\ \boldsymbol{G}(\boldsymbol{z},t) =& \bar{\boldsymbol{G}}g(\boldsymbol{z},t),\ \bar{\boldsymbol{G}} = \begin{bmatrix} \frac{1}{\boldsymbol{\Theta}_{11}\boldsymbol{A}_1^{\delta-1}\boldsymbol{B}_1} \\ \frac{1}{\boldsymbol{\Theta}_{12}\boldsymbol{A}_2^{\delta-1}\boldsymbol{B}_2} \\ \vdots \\ \frac{1}{\boldsymbol{\Theta}_{1m}\boldsymbol{A}_m^{\delta-1}\boldsymbol{B}_m} \end{bmatrix}, \end{aligned}$$

which is equivalent to problem (3) with reference tracking included. Note that $\boldsymbol{\alpha}$ has a physical interpretation of a mixing signal which determines the ratio of the output delivered by each input system.

B. Maximum Principle

In this section Pontryagin's maximum principle is applied to (9) and a optimal control strategy, $\boldsymbol{\alpha}(t)$, is devised.

The Hamiltonian for the problem is given by

$$H(\boldsymbol{z},\boldsymbol{\alpha},\boldsymbol{\lambda},t) = f(\boldsymbol{z},t) + \boldsymbol{\lambda}^T(\boldsymbol{A}\boldsymbol{z} + \boldsymbol{B}\boldsymbol{\Upsilon}(\boldsymbol{\alpha})\boldsymbol{G}(\boldsymbol{z},t)), \tag{10}$$

which can be rewritten, using the structure of the dynamical system and the objective function, as

$$H(\boldsymbol{z},\boldsymbol{\alpha},\boldsymbol{\lambda},t) = \sum_{i=1}^m H_i(\boldsymbol{z}_i,\alpha_i,\boldsymbol{\lambda}_i,t),$$

where

$$H_i(\boldsymbol{z}_i,\alpha_i,\boldsymbol{\lambda}_i,t) = f_i(\boldsymbol{z}_i,t) + \boldsymbol{\lambda}_i^T(\boldsymbol{A}_i\boldsymbol{z}_i + \boldsymbol{B}_i\alpha_i\boldsymbol{G}_i(\boldsymbol{z}_i,t)),$$

with

$$\begin{aligned} f_i(\boldsymbol{z}_i,t) =& \boldsymbol{p}(t)^T\boldsymbol{y}_{*i}(\boldsymbol{z}_i,t) - q_i\boldsymbol{C}_i\boldsymbol{z}_i, \\ \boldsymbol{y}_{*i}(\boldsymbol{z}_i,t) =& \tilde{\boldsymbol{\Theta}}_i^T(t)\boldsymbol{z}_i + \boldsymbol{\varphi}_i(t), \\ \tilde{\boldsymbol{\Theta}}_i(t) =& (\boldsymbol{\Theta}_{1i}(t),...,\boldsymbol{\Theta}_{ki}(t)), \\ \tilde{\boldsymbol{\varphi}}_i =& (\boldsymbol{\varphi}_{1i}(t),...,\boldsymbol{\varphi}_{ki}(t)). \end{aligned}$$

Note that $\boldsymbol{y}_{*i}(\boldsymbol{z}_i,t) = \sum_{j=1}^k y_{ji}(\boldsymbol{z}_i,t)$ by (2).

Thus the adjoint equation for the i'th input system is

$$\begin{aligned} \dot{\boldsymbol{\lambda}}_i(t) =& -\frac{\partial H_i(\boldsymbol{z}_i(t),\alpha_i(t),\boldsymbol{\lambda}_i(t),t)}{\partial \boldsymbol{z}_i} \\ =& \boldsymbol{C}_i^T\boldsymbol{q}_i - \tilde{\boldsymbol{\Theta}}_i(t)\boldsymbol{p}(t) - \boldsymbol{A}_i^T\boldsymbol{\lambda}_i(t) \\ & - \frac{\partial g(\boldsymbol{z}_i(t),t)}{\partial \boldsymbol{z}_i}\bar{\boldsymbol{G}}_i\alpha_i\boldsymbol{B}_i^T\boldsymbol{\lambda}_i(t) \end{aligned} \tag{11}$$

with the matrices previously defined.

Now assume that $\boldsymbol{\alpha}^*(t)$ solves (9) and let $\boldsymbol{z}^*(t)$ be the associated optimal state obtained by solving the dynamical system with the initial condition $\boldsymbol{z}_0$. The Pontryagin's maximum principle then yields the following point-wise maximization of (10)

$$\begin{aligned} H(\boldsymbol{z}^*(t),\boldsymbol{\alpha}^*(t),\boldsymbol{\lambda}(t),t) =& \max_{\boldsymbol{\alpha}\in\Omega(t)} H(\boldsymbol{z}^*(t),\boldsymbol{\alpha},\boldsymbol{\lambda}(t),t) \\ =& f(\boldsymbol{z}^*(t),t) + \boldsymbol{\lambda}(t)^T\boldsymbol{A}\boldsymbol{z}^*(t) \\ & + \max_{\boldsymbol{\alpha}\in\Omega(t)} g(\boldsymbol{z}^*(t),t)\sum_{i=1}^m \boldsymbol{\lambda}_i(t)^T\boldsymbol{B}_i\alpha_i\bar{\boldsymbol{G}}_i, \end{aligned} \tag{12}$$

where $\boldsymbol{\lambda}_i(t)$ is the solution to (11) fulfilling the transversality condition $\boldsymbol{\lambda}_i(T) = \boldsymbol{0}$. Hence the optimal input is located at the boundary of the input set $\Omega(t)$ as this is maximization of a linear problem. Note that $\boldsymbol{\alpha}^*(t)$ is not dependent on $g(\boldsymbol{z},t)$ and therefore not the reference signal. Thus the optimal fuel mixture can be found if $\boldsymbol{\Theta}_{ji}(t)$, $\boldsymbol{p}(t)$, $\text{sign}(g(\boldsymbol{z}^*(t),t))$, and the system matrices are known.

IV. Result on Power Plant Scenario

A power plant example which uses the result from above will be presented in this section. The power plant is a coal fired plant which is augmented with gas system, i.e., at first the plant has one input system which is then expanded to two input systems. Furthermore, the power plant has two outputs which yield an income of the plant. These are efficiency and controllability, and in short they represent the instantaneous production of electricity and the ability to change production to fit the current demand for electricity, respectively (see [6] for further details on the different outputs).

The dynamical system of the two input systems are captured by the following transfer function

$$H_i(s) = \frac{1}{(\tau_i s + 1)^3}$$

where $\tau_1 = 90$ and $\tau_2 = 60$, i.e., the gas system, H_2, is faster than the coal system, H_1.

The objective function in this case can be written as

$$f(\boldsymbol{z},t) = p_1(t)\sum_{i=1}^2 y_{1i}(\boldsymbol{z},t) + p_2(t)\sum_{i=1}^2 y_{2i}(\boldsymbol{z},t) - \boldsymbol{q}^T\boldsymbol{C}\boldsymbol{z},$$

where $p_1(t)$ and $p_2(t)$ are price of electricity and controllability, which a known 24 hours into the future, are extracted from Nordpool, which is a energy marketplace for Sweden, Denmark and Norway.

The power plant functions y_{ji} can be expressed as

$$\begin{aligned} y_{11}(\boldsymbol{z}_1) &= \boldsymbol{Q}_1\boldsymbol{z}_1 + b_1, \\ y_{12}(\boldsymbol{z}_2) &= \boldsymbol{Q}_2\boldsymbol{z}_2 + b_2, \\ y_{21}(\boldsymbol{z}_1,t) &= \xi_1(t)\boldsymbol{Q}_1\boldsymbol{z}_1 + \xi_1(t)b_1, \\ y_{21}(\boldsymbol{z}_2,t) &= \xi_2(t)\boldsymbol{Q}_2\boldsymbol{z}_2 + \xi_2(t)b_2, \end{aligned}$$

where $\boldsymbol{z}_i$ is the state of input system i and

$$\boldsymbol{Q}_1 = (10.77, 0, 0),\ \boldsymbol{Q}_2 = (18.87, 0, 0),$$
$$b_1 = -1.76,\ b_2 = 1.85,$$
$$\xi_1(t) = \begin{cases} 0 & y_r(t) \in S_1 \\ 0.267 & y_r(t) \in S_2 \\ 0 & y_r(t) \in S_3 \end{cases},\ \xi_2(t) = \begin{cases} 0 & y_r(t) \in S_1 \\ 0.534 & y_r(t) \in S_2 \\ 0 & y_r(t) \in S_3 \end{cases},$$

with

$$S_1 = \{s \in \mathbb{R} | 0 \leq s \leq 200\},$$
$$S_2 = \{s \in \mathbb{R} | 200 < s < 360\},\ \text{and}$$
$$S_3 = \{s \in \mathbb{R} | 360 \leq s \leq 400\}$$

being different operating region of the power plant where the controllability output has different models. The quantities in the above equations are obtained from measurement data and system data provided by DONG Energy (see [7]–[9], [13] for further details).

The reference to be tracked by y_1 is depicted in Figure 2, where the real data is the solid curve and the approximation used in this work is the dashed curve.

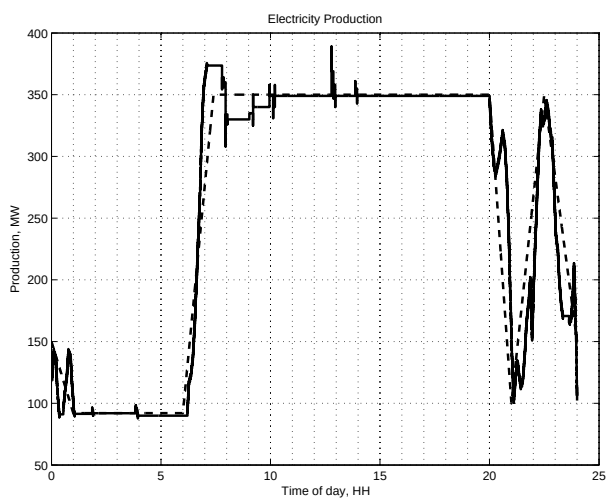

Fig. 2. Production reference signal during 24 hours - solid graph is real data and dashed graph is approximation used in this work.

Figure 3 depicts the solution of the adjoint equation, the dashed graphs are for input system 1 and the solid graphs are for input system 2.

By using the adjoint variable to solve (12) the optimal fuel configuration is computed and $\alpha_1(t)$, which is the ratio of the mixed fuel consisting of coal, is depicted in Figure 4. As seen in the figure coal is used most of the day, however, during some periods in the morning and evening gas is used. During the middle of the day predictions of the demand for electricity is rather good and therefore the value of controllability is low. In the morning and evening the price of controllability is high and therefore, the gas is in use. The reason is that gas system is easier to control than coal and it, therefore, allows for a larger controllability output. The fuel usage

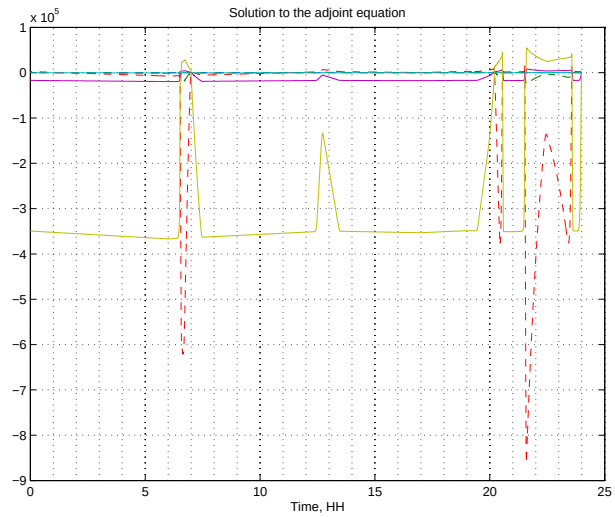

Fig. 3. Solution to the adjoint equation for the power plant example. The dashed graphs are for input system 1 and the solid graphs illustrates the trajectory of the adjoint variable for input system 2.

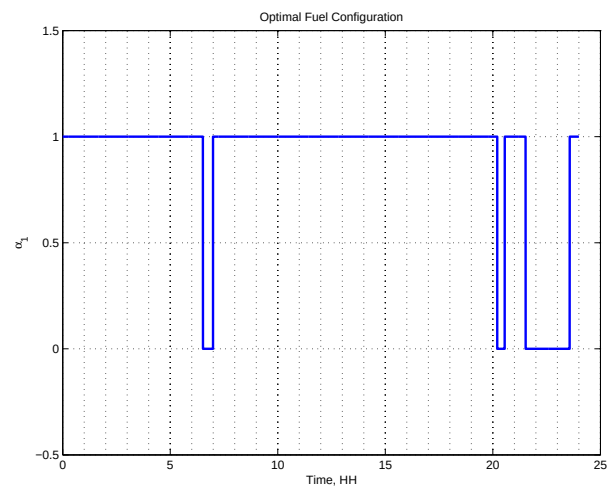

Fig. 4. The optimal fuel configuration illustrated by the graph of $\alpha_1(t)$, i.e., the ratio of the fuel mixture consisting of coal.

strategy from above have been implemented in simulations and the profit of the plant during 24 hours has been calculated. This is illustrated in Figure 5, both for the plant using a mixture of fuels, and for the plant using only coal. The growth of profit is negative most of the morning until 10:00 with the exception of around 7:00 when gas is used shortly (here the profit of the two fuel configurations start to deviate). The negative growth of profit results from the price of electricity as it is lower than the cost of operating the plant at the given reference production. At the end of the day the plant using a mixture of fuels has a profit, which is approximately 17% larger than the profit of the plant using only coal.

The tracking error of the two configurations are shown in Figure 6 and they are indeed identical. As seen in the figure both the plant using only coal and the plant using a mixture of fuels track the reference equally well.

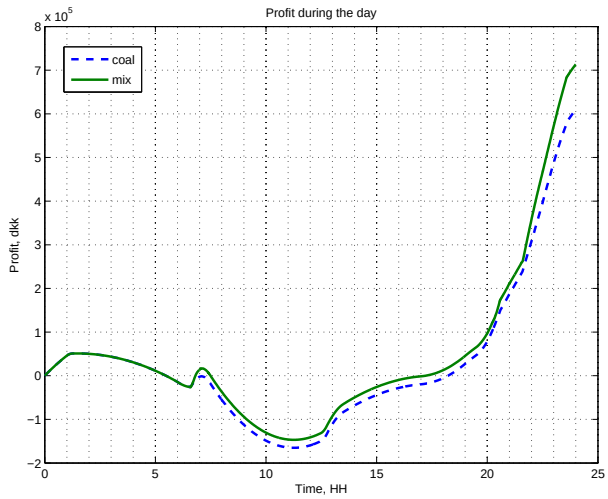

Fig. 5. Accumulated profit of the power plant during 24 hours of operation. The solid graph is the profit for the plant when both coal and gas is used and the dash graph is profit when only coal is present.

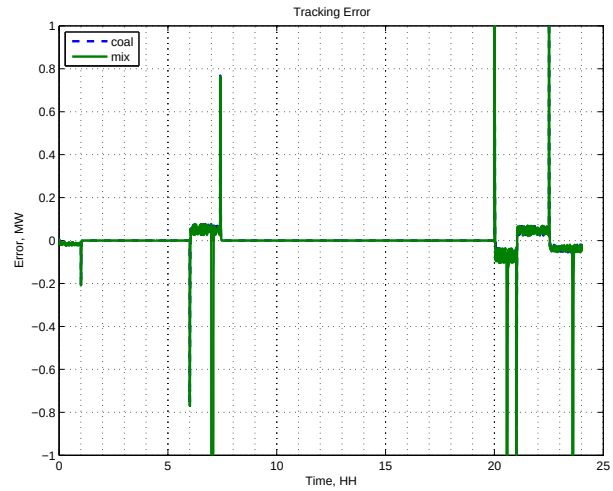

Fig. 6. The reference tracking error of the two plant configuration, i.e., the tracking error during 24 hours for the plant both when gas is and is not used (solid is mixture and dashed is coal only).

V. Discussion

In this work the Pontryagin maximum principle has been applied to a problem dealing with profit maximization of a plant capable of using multiple input systems to generate some commodities. An additional constraint of tracking a reference with one of the outputs is included and the optimal mixing of the different input systems has been found. The optimal mixing signal does not depend on the reference signal, and thus optimal operation of the plant can be ensured if only the system matrices for the input systems and performance specification are known.

References

[1] J. Stoustrup, "Plug & play control: Control technology towards new challenges," *European Journal of Control*, vol. 15, no. 3-4, pp. 311–330, May-August 2009.

[2] J. Bendtsen, K. Trangbaek, and J. Stoustrup, "Plug-and-play process control: Improving control performance through sensor addition and pre-filtering," in *Proceedings of the 17th IFAC World Congress, Seoul, South Korea*, 2008.

[3] *Plug & Play Process Control*, http://es.aau.dk/plugandplay, 2009, research project supported in part by the Danish Research Council for Technology and Production Sciences.

[4] V. Alstad and S. Skogestad, "Null space method for selecting optimal measurement combinations as controlled variables," *Industrial & engineering chemistry research*, vol. 46, pp. 848–853, 2007.

[5] S. Skogestad and T. Larsson, "A review of plantwide control," Department of Chemical Engineering, Norwegian University of Science and Technology, Tech. Rep., 1998.

[6] M. Kragelund, R. Wisniewski, T. Mølbak, R. J. Nielsen, and K. Edlund, "On propagating requirements and selecting fuels for a benson boiler," in *Proceedings of the 17th IFAC World Congress, Seoul, South Korea*, 2008.

[7] M. Kragelund, J. Leth, and R. Wisniewski, "Selecting actuator configuration for a benson boiler: Production economics," in *Proceedings of the European Control Conference, Budapest, Hungary*, 2009.

[8] M. Kragelund, U. Jönsson, J. Leth, and R. Wisniewski, "Optimal production planning of a power plant," in *Proceedings of the International Conference on Control and Automation, Christchurch*, 2009.

[9] M. Kragelund, J. Leth, R. Wisniewski, and U. Jönsson, "Profit maximization of a power plant," *European Journal of Control*, 2010, submitted.

[10] ——, "Performability measure for a power plant," *IEEE Multiconference on Systems and Control*, 2010.

[11] H. K. Khalil, *Nonlinear Systems*, 3rd ed. Prentice Hall, 2002.

[12] A. Isidori, *Nonlinear control systems*, 3rd ed., ser. Communications and Control Engineering Series. Berlin: Springer-Verlag, 1995.

[13] M. Kragelund, J. Leth, and R. Wisniewski, "Optimal usage of coal, gas, and oil in a power plant," *IET Control Theory and Applications*, 2010, special issue on Advances in Complex Control Systems Theory and Applications.