Ground Loop Impedance of Long EHV Cable Lines

Ohno, Teruo; Bak, Claus Leth; Sørensen, Thomas K.

Published in:
Proceedings of Western Protective Relay Conference 2012

Publication date:
2012

Document Version
Accepted author manuscript, peer reviewed version

Ground Loop Impedance of Long EHV Cable Lines

Teruo Ohno, *Tokyo Electric Power Company and Aalborg University*
Claus Leth Bak, *Aalborg University*
Thomas Kjærsgaard Sørensen, *Energinet.dk*

***Abstract*—The distance protection scheme without communication is often applied to the backup protection of EHV cable lines. For a reliable operation of a ground distance relay, the ground loop impedance of EHV cable lines needs to have a linear relationship to the distance from the relay location to the fault location.**

The discontinuity of the ground loop impedance at cross-bonding points may have an ill effect on the reliable operation of the ground distance relay. However, the cause and parameters of the discontinuity and its effects on the ground distance relay protection have not been discussed in literature.

Through the calculation of the ground loop impedance for cable lines, it has been found that, for long EHV cable lines, the reliable operation of the ground distance relay is possible with a typical relay setting. Effects of parameters, such as substation grounding, cable layouts and transposition, are also found through the analysis.

***Index Terms*—distance relay, ground loop impedance, cross-bonded cable**

I. Introduction

The backup protection of EHV cable lines often adopts the distance protection scheme without communication. Current differential schemes or directional comparison schemes based on impedance measurements are normally applied as the main protection. As the main protection relies on a communication link, cable lines need to be protected by distance relays when the communication link is lost. In addition, distance relays must operate correctly when the main protection fails to operate.

Cable faults are normally single line to ground (SLG) faults. In order for ground distance relays to fulfill their roles, the ground loop impedance calculated by the relays needs to accurately represent the distance from the relay location to the fault location.

A potential problem when protecting cross-bonded cables by ground distance relays is that their ground loop impedance does not exhibit a linear relationship to the distance to the fault location [1], [2]. It is known that the ground loop impedance shows a discontinuity, or in other words a sudden change, at cross-bonding points.

Even though this may result in unwanted operations or mis-operations of ground distance relays, the problem has not been studied in detail. As a result, parameters that affect the discontinuity of the ground loop impedance have not been discussed in literature. Furthermore, the discontinuity of long EHV cable lines with multiple major sections has never been discussed in literature.

One contributing factor for this lack of the attention is that there have been only few EHV cable line projects until recently. However, considering the increased number of long EHV cable lines being planned or built [3]–[7], it is now of more importance to shed some light on the discontinuity of the ground loop impedance for the accurate operation of ground distance relays.

This paper calculates the ground loop impedance for a cable line with one major section, a planned 400 kV 28 km cable line in Denmark and an existing 500 kV 40 km cable line in Japan. The cause and parameters of the discontinuity and its effects on the ground distance relay protection are made clear through analysis of cable line examples.

II. Ground Loop Impedance of Cross-bonded Cables

Cable faults are normally single line to ground (SLG) faults. Short circuits are mostly man-caused and occur in very limited occasions. In a SLG fault, a cable core is short-circuited to the cable sheath, which is grounded at cable heads and normal joints. The return circuit for a SLG fault is explained later in Fig. 4.

Fig. 1 shows a circuit that represents a SLG fault in a cable line. *Zl* is the cable impedance between the location of the impedance relay and the fault location.

Manuscript received September 17, 2012.

Teruo Ohno is with the Tokyo Electric Power Company and the Aalborg University, Aalborg, Denmark (e-mail: ohno.teruo@tepco.co.jp).

Claus Leth Bak is with the Aalborg University, Aalborg, Denmark (e-mail: clb@et.aau.dk).

Thomas Kjærsgaard Sørensen is with the Energinet.dk, Fredericia, Denmark (e-mail: tks@energinet.dk).

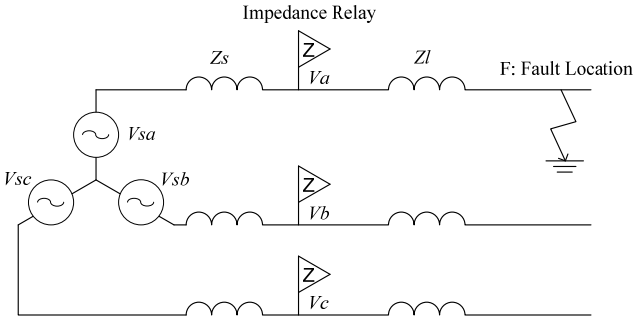

Fig. 1. SLG fault in a cable line.

The SLG fault in Fig. 1 can be expressed using symmetrical components as shown in Fig. 2.

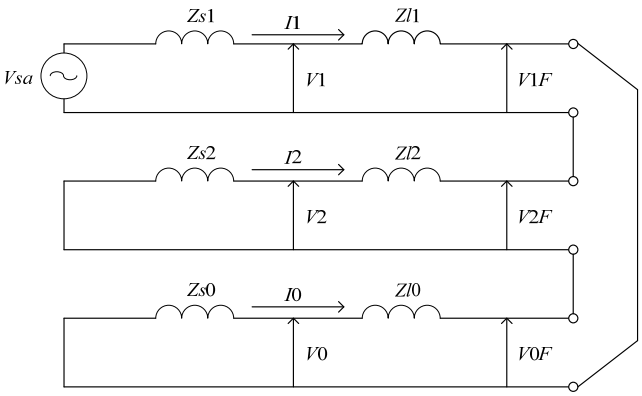

Fig. 2. Loop impedance in a single line to ground fault.

In Fig. 2,

$$
\begin{aligned}
Va &= V1 + V2 + V0 \\
&= (Zl1 \times I1 + V1F) + (Zl2 \times I2 + V2F) \\
&\qquad + (Zl0 \times I0 + V0F) \\
&= (Zl1 \times I1) + (Zl2 \times I2) + (Zl0 \times I0) \\
&\qquad + (V1F + V2F + V0F) \qquad (1) \\
&= (Zl1 \times I1) + (Zl1 \times I2) + (Zl0 \times I0) \\
&= Zl1(I1 + I2 + I0) + (Zl0 - Zl1) \times I0 \\
&= Zl1\left(Ia + \frac{Zl0 - Zl1}{3Zl1} \times 3I0\right)
\end{aligned}
$$

The ground loop impedance (positive sequence impedance) calculated by the ground impedance relay is

$$
\begin{aligned}
Zl1 &= \frac{Va}{Ia + \frac{Zl0 - Zl1}{3Zl1} \times 3I0} \\
&= \frac{Va}{Ia + k0 \times 3I0}
\end{aligned} \qquad (2)
$$

Here, the zero-sequence compensation $k0 = (Zl0\text{-}Zl1)/3Zl1$.

Therefore, by considering the zero-sequence compensation, the ground impedance relay can accurately calculate the positive sequence impedance to the fault location. In typical practice, the zero-sequence compensation $k0$ is calculated with the positive-sequence impedance $Zl1$ and zero-sequence impedance $Zl0$ for the total length of the line, assuming that both $Zl1$ and $Zl0$ have a linear relationship to the distance to the fault location.

The ground loop impedance $Zl1$ of an overhead line is almost linear to the distance to the fault location as long as the line type and the tower configuration do not change too much. Using this characteristic, it is possible for the impedance relay to find the distance to the fault location.

For cross-bonded cables, the ground loop impedance does not exhibit a linear relationship to the distance to the fault location [1], [2]. Fig. 3 shows the compensated loop impedance of a cable line. The ground loop impedance shows discontinuity at the cross-bonding points. This leads to the nonlinear relationship to the distance to the fault location and may result in unwanted operations or mis-operations of impedance relays.

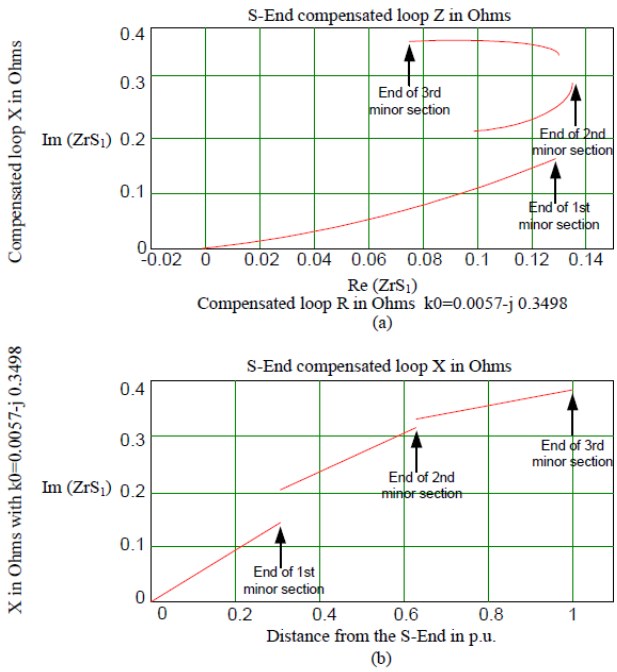

Fig. 3. Compensated loop impedance for cross-bonded cables (Source: Protection of High-Voltage AC Cables [2]).

The authors of this paper have found that an imbalance of impedances between phases causes the discontinuity of the ground loop impedance. Let us focus on a cross-bonding point. Because of the cross-bonding, a SLG fault before the cross-bonding point has a different return circuit (sheath) from a SLG fault on the same phase but after the cross-bonding point, as shown in Fig. 4. Therefore, if there is an imbalance of impedance between phases, the change of the return circuit can cause the discontinuity of the ground loop impedance.

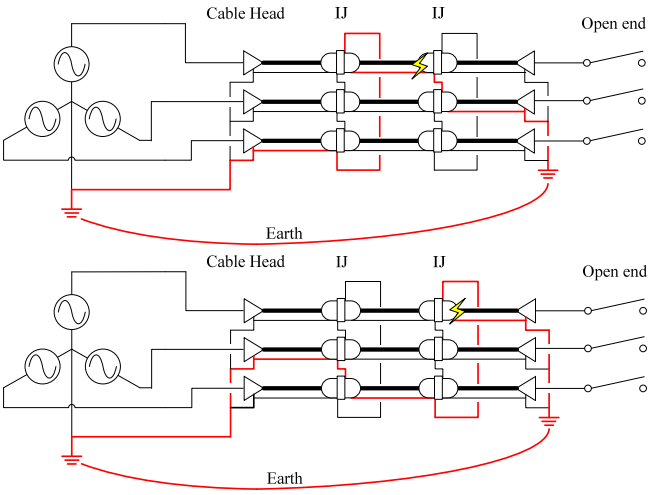

Fig. 4. Return circuit for a SLG fault before and after a cross-bonding point.

III. Cross-bonded Cable with One Major Section

In order to confirm the validity of the statement, the ground loop impedances were calculated for the following types of cross-bonded cables:

- Directly buried in a flat formation without transposition
- Directly buried in a flat formation with transposition
- Directly buried in a trefoil formation without transposition
- Directly buried in a trefoil formation with transposition
- Laid in a tunnel in a trefoil formation with transposition

Here, transposition means the transposition of the whole cable, which is different from cross-bonding.

As in the previous section, it was assumed that the cross-bonded cable had only one major section. The physical and electrical parameters of the Asnæsværket – Torslunde cable were used for the calculation. Assumed cable layouts are illustrated in Fig. 5.

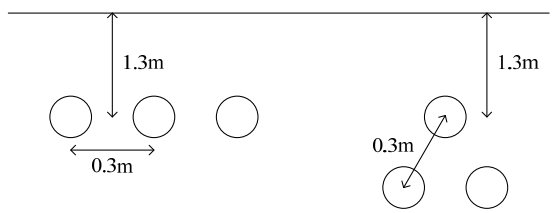

(a) Directly buried in a flat formation (b) Directly buried in a trefoil formation

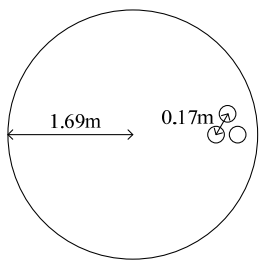

(c) Laid in a trefoil formation in a tunnel

Fig. 5. Cable layouts.

The ground loop impedances were calculated using the steady-state calculation function of the ATP-EMTP. The cable parameters were thus calculated by the subroutine CABLE CONSTANTS with the target frequency 50 Hz within ATP-EMTP.

Fig. 6 shows the compensated ground loop impedances for different cable layouts and with/without transposition. It has been found that the transposition does not have any impact on the ground loop impedance when the cable is laid in a trefoil formation. Comparing the ground loop impedance, the discontinuity at the cross-bonding points is larger in the following order as shown in Table 1:

(1) Directly buried in a flat formation without transposition (Flat w/o Transp.)
(2) Directly buried in a flat formation with transposition (Flat w Transp.)
(3) Directly buried in a trefoil formation (Trefoil)
(4) Laid in a tunnel in a trefoil formation with transposition (Tunnel)

This order is reasonable considering the impedance balance between phases.

TABLE I
Largest Discontinuity of Ground Loop Reactance at Cross-bonding Points (Cable with One Major Section)

Cable layouts	(1) Flat w/o Transp.	(2) Flat w Transp.	(3) Trefoil	(4) Tunnel
Largest discontinuity	17.0 %	14.5 %	13.8 %	11.7 %

The difference in the discontinuities is significant, especially at the second cross-bonding point where only minor discontinuity is observed for the cable laid in a trefoil formation in a tunnel. This is because the cable laid in a trefoil formation in a tunnel has the best impedance balance between phases due to the existence of the perfect ground (tunnel) close to the cable.

The calculated loop impedance shows the difficulty in protecting a short cross-bonded cable by the impedance relay without communication. When it is necessary, the rectangular characteristic is more suited than the mho characteristic.

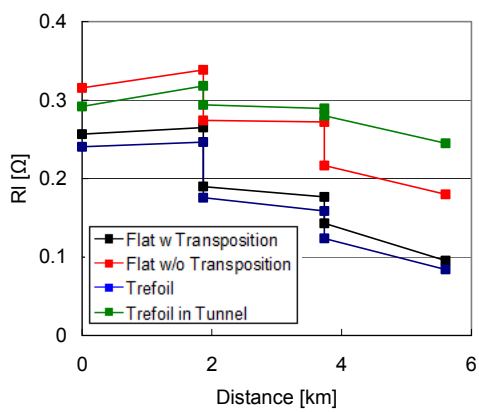

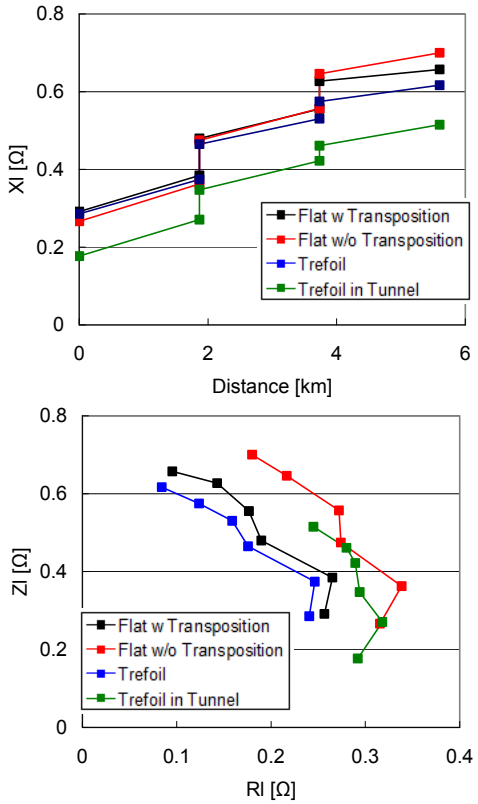

Fig. 6. Compensated ground loop impedance for cross-bonded cables with one major section.

IV. 400 kV 28 km ASV – TOR Cable Line

The ground loop impedance of a cross-bonded cable with one major section has previously been discussed in literature even though its relationship with cable layouts or transposition has never been investigated [1], [2]. The ground loop impedance of a long cable has not been discussed, but the effect of the discontinuity is expected to become relatively small since the impedance of the total length becomes large.

In this section the ground loop impedance is calculated and studied for the Asnæsværket (ASV) – Torslunde (TOR) cable line. The cable line is currently being planned as a 400 kV 28 km cable line (Al 1600 mm^2 XLPE) by the Danish TSO, Energinet.dk as shown in Fig. 7.

Fig. 7. The planned 400 kV ASV – TOR – KYV cable line in the Eastern Danish grid (courtesy of Energinet.dk).

Fig. 8 shows assumed physical and electrical parameters of the ASV – TOR cable line.

Through the calculation of the ground loop impedance, effects of substation grounding resistance, cross-bonding, cable layouts and transposition are discussed.

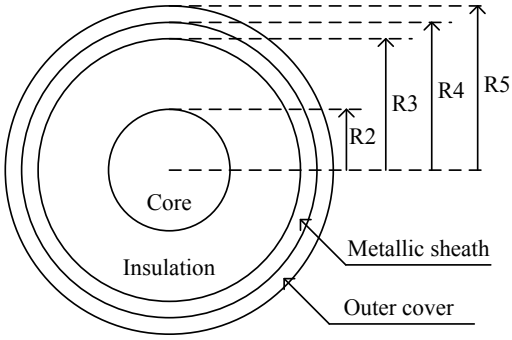

R2 = 2.60 cm, R3 = 5.80 cm, R4 = 5.92 cm, R5 = 6.35 cm
Core inner radius: 0.0 cm, Core resistivity: 2.84×10^{-8} Ωm,
Metallic sheath resistivity: 2.840×10^{-8} Ωm,
Relative permittivity (XLPE, PE): 2.4

Fig. 8. Assumed physical and electrical parameters of the ASV – TOR cable line.

A. Effects of Substation Grounding Resistance

As discussed in Section II, the ground impedance relay calculates the ground loop impedance (positive-sequence impedance) using the zero-sequence compensation $k0 = (Zl0\text{-}Zl1)/3Zl0$. Here, the zero-sequence compensation $k0$ is calculated with the positive-sequence impedance $Zl1$ and zero-sequence impedance $Zl0$ for the total length of the line. It is important to obtain $Zl1$ and $Zl0$ accurately in order to calculate $k0$ and the ground loop impedance with accuracy.

Fig. 9 illustrates the setup to obtain the zero-sequence impedance $Zl0$ of the ASV – TOR cable line. This section focuses on the grounding of phase conductors, enclosed by the dotted square in Fig. 9. From the theoretical formulas of sequence currents, it is known that, whereas $Zl1$ is not affected by the substation grounding resistance, $Zl0$ is affected by the substation grounding resistance. The grounding of phase conductors therefore affects the accuracy of $Zl0$.

The upper figures of Fig. 10 describe the grounding of phase conductors in the setups for the field measurements in detail. Depending on the setup, the grounding of phase conductors can be close to or far from the grounding of cable heads.

The grounding of phase conductors is close to the grounding of cable heads in phase conductor grounding (1). As shown in the lower left figure of Fig. 10, the sheath return current can go back to the source without going through the substation grounding resistance in this case. The cross-bonding is not shown in the figure for simplicity.

In contrast, the grounding of phase conductors is far from the grounding of cable heads in phase conductor grounding (2). As shown in the lower right figure of Fig. 10, the sheath/earth return current needs to go through the substation grounding resistance in this case.

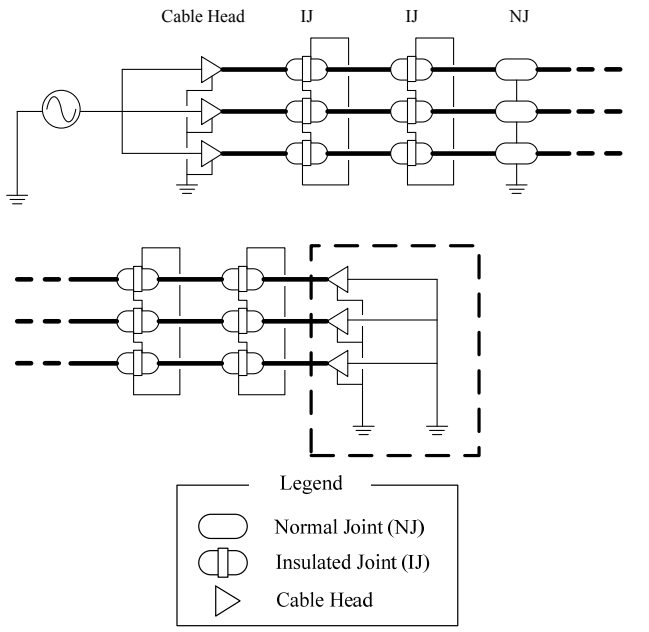

Fig. 9. Setup to obtain the zero-sequence impedance of the ASV-TOR cable line.

It is therefore expected that $Zl0$ obtained by the setup with phase conductor grounding (1) has a smaller real part. Table 2 compares $Zl0$ and $k0$ with the substation grounding resistance 1 ohm. It is known that $Zl1$ is not affected by the phase conductor grounding or substation grounding resistances, but it is also shown in the table just to confirm it. The calculation results show that the phase conductor grounding has a significant effect on both $Zl0$ and $k0$. Since this difference will affect the calculated ground loop impedance, it is necessary to know which phase conductor grounding was selected for the field measurements of $Zl0$.

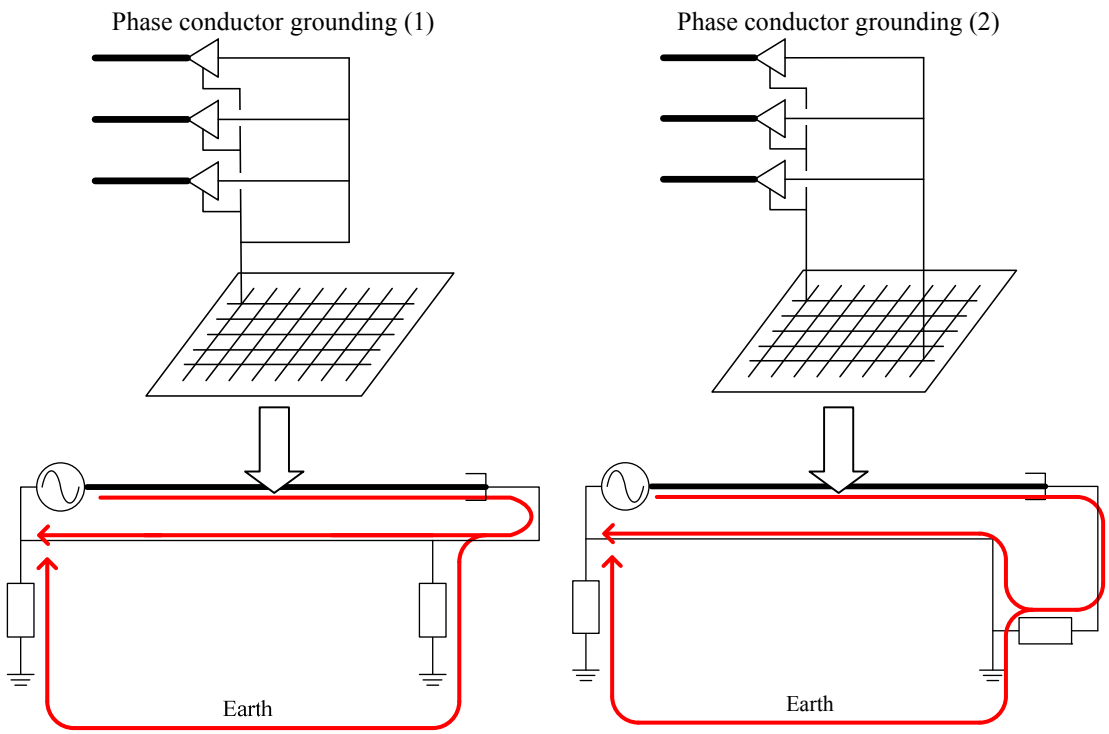

Fig. 10. Comparison of phase conductor groundings.

TABLE II
EFFECTS OF PHASE CONDUCTOR GROUNDING (1 ohm)

Phase conductor grounding	(1)	(2)
$Zl1$ [Ω]	0.487 + j5.07	
$Zl0$ [Ω]	4.82 + j 2.78	7.50 + j 3.42
$k0$	–0.122 – j 0.296	–0.0639 – j 0.467

TABLE III
EFFECTS OF PHASE CONDUCTOR GROUNDING (0.1 ohm)

Phase conductor grounding	(1)	(2)
$Zl1$ [Ω]	0.487 + j5.07	
$Zl0$ [Ω]	2.57 + j 2.22	2.86 + j 2.25
$k0$	–0.173 – j 0.153	–0.169 – j 0.172

Fig. 11 shows the sheath/earth return current in the SLG fault on a cable line. It is clear from the figure that the sheath return current can go back to the source without going through the substation grounding resistance. This means that phase conductor grounding (1) is more appropriate for the field measurements of $Zl0$, considering that the value is used for the impedance relay setting. If the field measurements are conducted with phase conductor grounding (2), the results need to be modified using EMTP simulations.

Fig. 11 considers the SLG fault in a cable line, for example, the ASV – TOR cable line. When a SLG fault occurs in another feeder from Asnæsværket, it will be arrested by the second zone or the third zone of the impedance relay located at the Torslunde side. In this case, the transformers at the Asnæsværket will provide the path for the return current. Therefore, the selection of the phase conductor grounding is not important in this case.

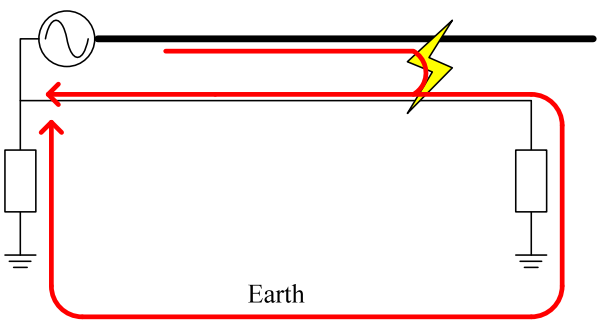

Fig. 11. Sheath/earth return current in the single line to ground fault.

One thing we need to keep in mind is that $Zl0$ calculated with phase conductor grounding (2) may be preferred for other studies such as transient stability studies. Since phase conductor grounding (2) leads to larger $Zl0$, it will result in a conservative assessment. We need to know which phase conductor grounding was selected when the field measurements of $Zl0$ are performed before we apply the value for the calculation of the ground loop impedance.

The discussion of this section, so far, assumed the substation grounding resistance 1 ohm. This value is an upper limit in a practice of many utilities. The choice of this value normally leads to a conservative evaluation in most studies. However, in reality, the substation grounding resistance of 0.1 ohm is often achieved.

Table 3 shows $Zl0$ and $k0$ calculated with phase conductor grounding (1) and (2) with the substation grounding resistance 0.1 ohm. The calculation results show that the phase conductor grounding does not have a significant effect on $Zl0$ and $k0$ in terms of the impedance relay setting.

B. Effects of Cross-bonding

In a typical practice, the zero-sequence compensation $k0$ is calculated with the positive-sequence impedance $Zl1$ and zero-sequence impedance $Zl0$ for the total length of the line. Assuming that both $Zl1$ and $Zl0$ have a linear relationship to the distance to the fault location, $k0$ takes a constant value regardless of the fault location.

However, for cross-bonded cables, $Zl0$ does not have a linear relationship to the distance to the fault location as shown in Section III. As a result, the actual value of $k0 = (Zl0\text{-}Zl1)/3Zl0$ changes depending on the fault location. Since $k0$ is normally input as a constant value for each zone setting, it causes an error in the calculation of the ground loop impedance.

This section studies how $Zl0$ and $k0$ changes according to the fault location with substation grounding resistances 1 ohm and 0.1 ohm. The actual values of $Zl0$ and $k0$ are calculated with the steady-state calculation function of ATP-EMTP. A SLG fault is placed at each joint in phase a, then Va / Ia gives (2 $Zl1$ + $Zl0$) / 3 from the relay location to the fault location. As we know that $Zl1$ has a linear relationship to the distance to the fault location, $Zl1$ can be theoretically calculated from $Zl1$ of the total length in Table 2 and Table 3. This means that the actual values of $Zl0$ can be calculated as

$$Zl0 = 3\frac{Va}{Ia} - 2Zl1 \tag{3}$$

Here, $Zl1$ and $Zl0$ are the positive-sequence and zero-sequence impedances from the relay location to the fault location. Note that they are not the sequence impedances for the total length.

Fig. 12 shows the comparison of the actual $Zl0$ calculated from Eqn. 6.3 and $Zl0$ obtained from the field measurements for the total length. When deriving $Zl0$ from the field measurements, it was assumed that $Zl0$ had the linear relationship to the distance to the fault location. Measurements (1) and (2) respectively mean the field measurements performed with phase conductor groundings (1) and (2). Substation grounding resistance was set as 1 ohm.

From the figure, it is obvious that $Zl0$ does not have the linear relationship to the distance to the fault location. The discontinuities of $Zl0$ at cross-bonding points can be observed. As discussed, Measurement (1) is closer to the actual $Zl0$. Measurements (1) and (2) are derived from the field measurements performed with the total length, there is no noticeable difference between the actual $Zl0$ and Measurement (1) at the end of the line.

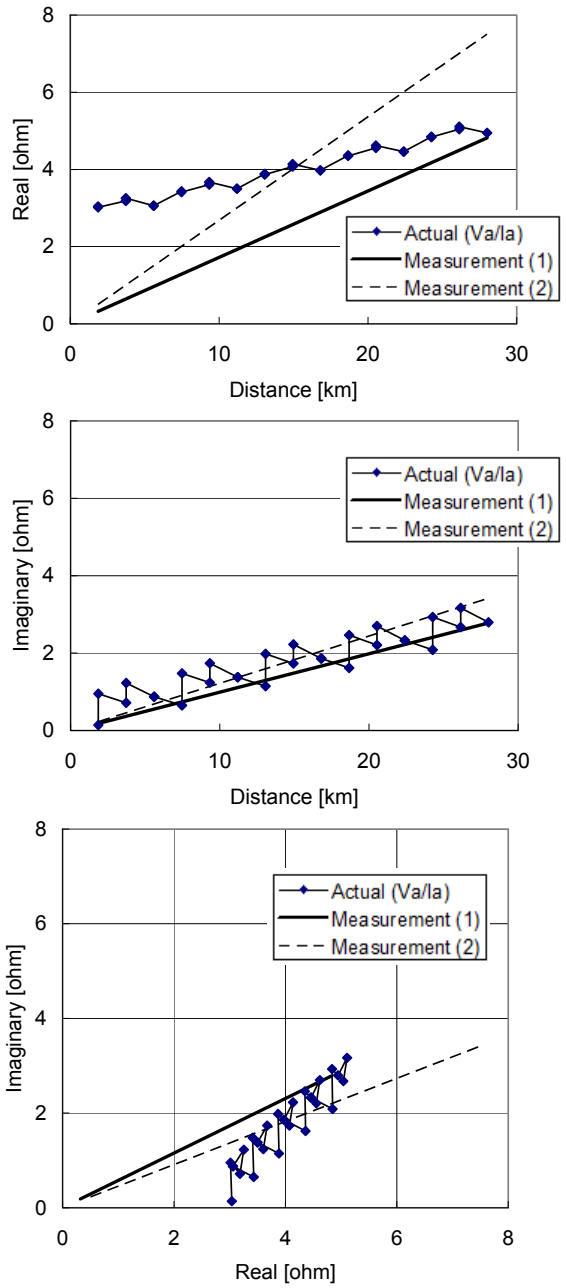

Fig. 12. Comparison of actual *Zl*0 and *Zl*0 obtained from field measurements (1 ohm).

Fig. 13 shows the comparison of the actual *k*0 calculated using EMTP simulations and *k*0 obtained from the field measurements for the total length. Since Measurements (1) and (2) assume the linear relationship between *Zl*0 and the distance to the fault location, *k*0 obtained from the field measurements becomes constant regardless of the fault location. It is clear from the results that *k*0 has a relatively large error when the fault occurs near the relay location.

Fig. 14 and Fig. 15 show the comparison of the actual *Zl*0 and *k*0 calculated using EMTP simulations and *Zl*0 and *k*0 obtained from the field measurements for the total length. The difference from Fig. 12 and Fig. 13 is the assumed substation grounding resistance, which was reduced from 1 ohm to 0.1 ohm. The discontinuities at cross-bonding points are observed in a similar fashion, but the error of *Zl*0 and *k*0 obtained from the field measurements become much smaller. Only the results with Measurement (1) are shown since Measurements (1) and (2) do not have a significant difference.

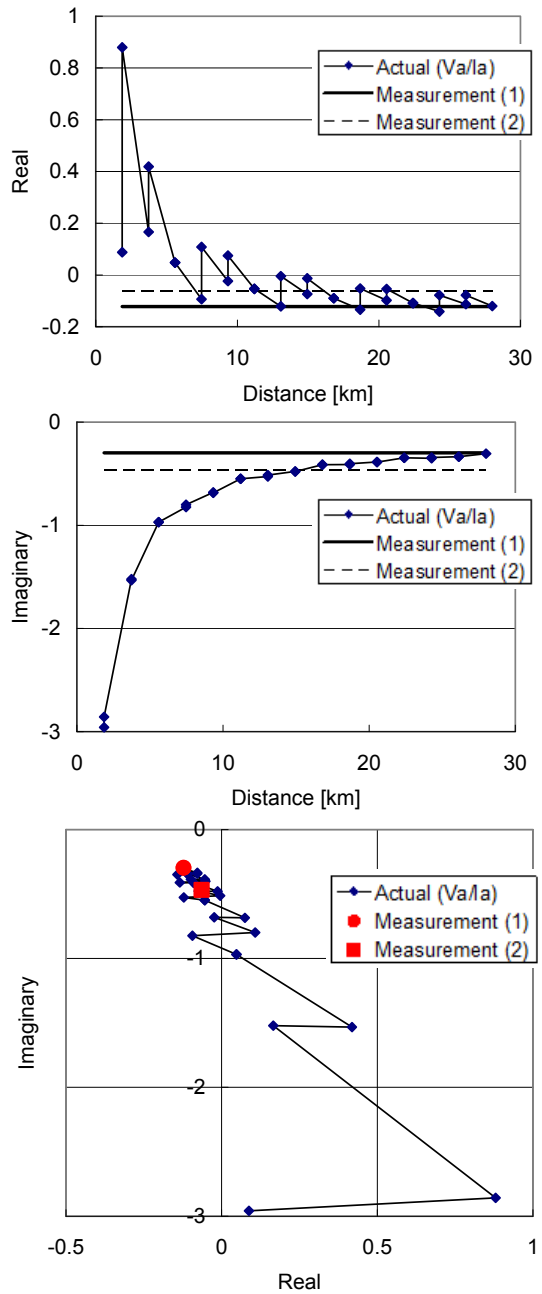

Fig. 13. Comparison of actual *k*0 and *k*0 obtained from field measurements (1 ohm).

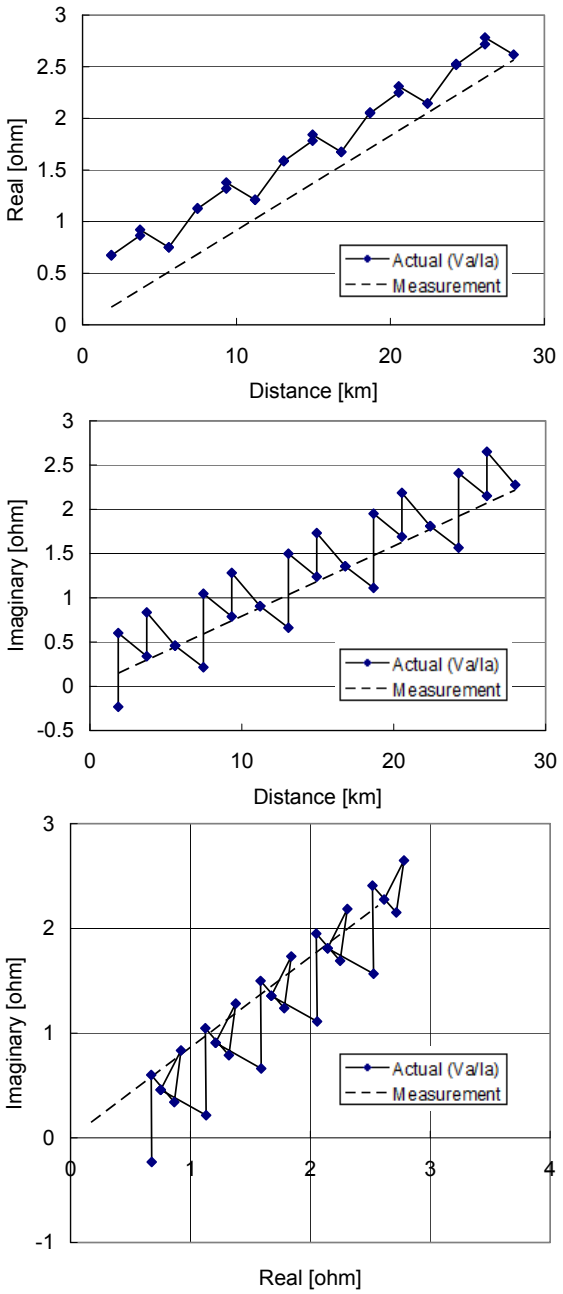

Fig. 14. Comparison of actual *Zl*0 and *Zl*0 obtained from field measurements (0.1 ohm).

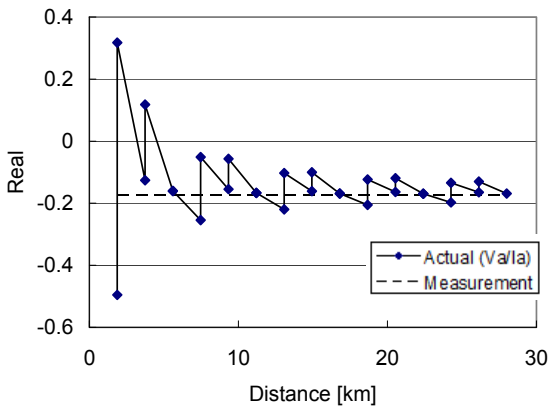

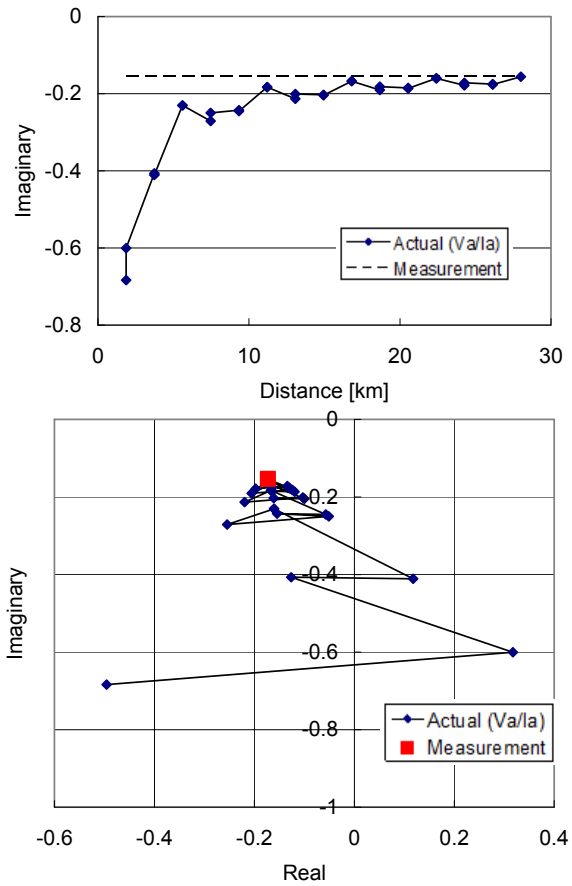

Fig. 15. Comparison of actual *k*0 and *k*0 obtained from field measurements (0.1 ohm).

C. Calculation of Ground Loop Impedance

In the previous sections, we have found the effects of the substation grounding resistance and the cross-bonding. This section studies the impact of these effects on the ground loop impedance.

Fig. 16 illustrates the ground loop impedance calculated for the 400 kV 28 km ASV – TOR cable line. In the figure, ZRy is the actual uncompensated (k = 0) and compensated (k = k0) ground loop impedance calculated by the impedance relay, and Zpos is the positive sequence impedance obtained by field measurements for the total length. The substation grounding resistances were first assumed to be 1 ohm.

In Fig. 16, the ground loop impedance exhibits the discontinuity at cross-bonding points. The ASV – TOR cable line is assumed to be directly laid in a flat formation with transposition. The largest discontinuity of the compensated ground loop reactance at cross-bonding points is approximately 5.6 % of the reactance of the total length. The discontinuity at each cross-bonding point became much smaller, as expected, compared with the cross-bonded cable with one major section. The discontinuity is not observed at normal joints, which is reasonable.

If the first zone of the impedance relay covers 90 % of the total length, it may overreach to the bus on the other end and also to the next feeders due to the discontinuity of 5.6 %. The

overreach is not favorable as it can result in an unwanted tripping of the ASV – TOR cable line in case of a fault in the bus on the other end or in the next feeders. It is common to cover 80 % of the total length by the first zone. With this setting, the first zone will not overreach to the bus on the other end, even with the discontinuity of 5.6 % and a typical error around 5 % in the total impedance.

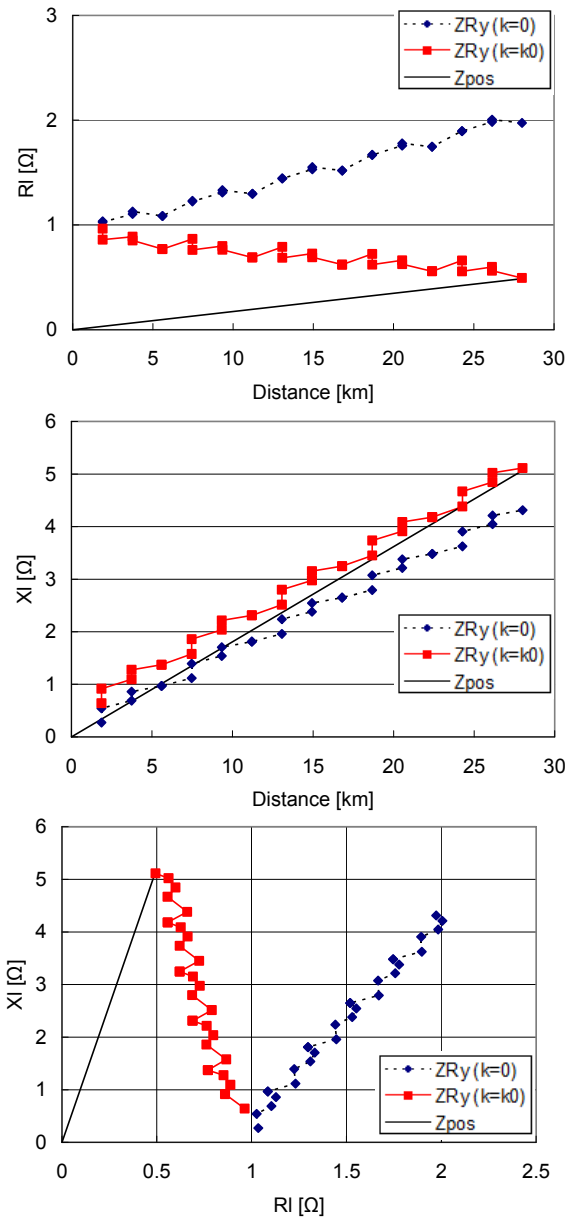

Fig. 16. Ground loop impedance for the ASV – TOR cable line (1 ohm).

Fig. 17 shows the ground loop impedance with the reduced substation grounding resistance (1 Ω to 0.1 Ω). It can be seen that ZRy becomes much closer to Zpos, especially for the resistance part Rl, which means that a better impedance relay setting is possible.

In contrast, with regard to the discontinuity, the largest discontinuity of the compensated ground loop reactance is increased to approximately 6.4 % of the reactance of the total length, by the reduction of the substation grounding resistance. This increase is reasonable since the substation grounding resistance is a balanced component for three phases. As a proportion of the balanced component in the total ground loop impedance is decreased, the imbalance of impedances between phases is increased. However, the first zone will not overreach to the bus on the other end with the discontinuity of 6.4 %, as long as it covers 80 % of the total length.

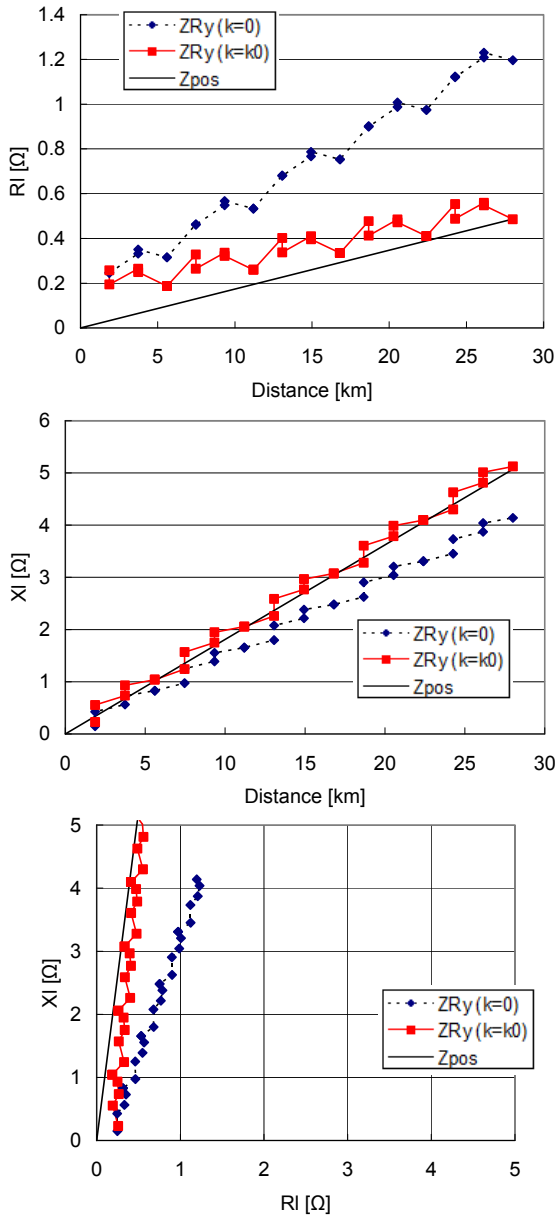

Fig. 17. Ground loop impedance for the ASV – TOR cable line (0.1 ohm).

D.Effects of Cable Layouts and Transposition

Section III shows the effects of cable layouts and transposition with a cross-bonded cable with one major section. This section studies how the effects are changed with a long cable. Here, the ASV – TOR cable line was assumed to be directly buried in a flat formation with transposition. In this

section, the ground loop impedances are compared with the following cable layouts as in Section III:

(1) Directly buried in a flat formation without transposition (Flat w/o Transp.)
(2) Directly buried in a flat formation with transposition (Flat w Transp.)
(3) Directly buried in a trefoil formation (Trefoil)
(4) Laid in a tunnel in a trefoil formation with transposition (Tunnel)

Fig. 18 shows the comparison of the compensated ground loop impedance for different cable layouts. Substation grounding resistance was set to 0.1 Ω, and phase conductor grounding (1) was assumed for the calculation of *k*0.

Table 4 shows proportions of the largest discontinuities of the compensated ground loop reactances against the reactances for the total length. The cross-bonded cable laid in a tunnel has a lower discontinuity compared with the other three cable layouts. As the discontinuities became smaller compared with the cross-bonded cable with one major section, the difference of the other three cable layouts became negligible.

TABLE IV
LARGEST DISCONTINUITY OF GROUND LOOP REACTANCE AT CROSS-BONDING POINTS

Cable layouts	(1) Flat w/o Transp.	(2) Flat w Transp.	(3) Trefoil	(4) Tunnel
Largest discontinuity	6.0 %	6.4 %	6.4 %	4.6 %

The first zone will not overreach to the bus on the other end with this level of discontinuities, as long as it covers 80 % of the total length. The discontinuities are larger for the resistance part of the ground loop impedance compared with the reactance part. However, the discontinuities of the resistance part are not very important for the impedance relay setting as it is necessary to consider a fault resistance.

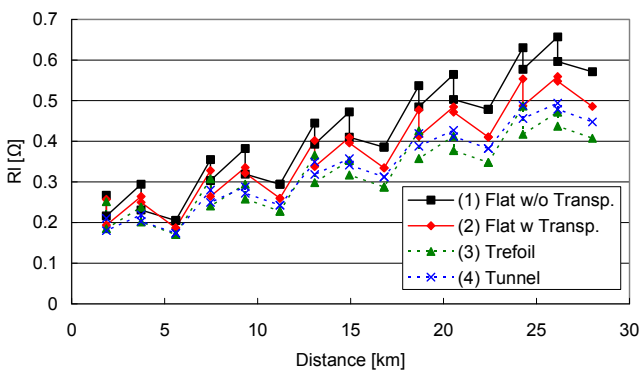

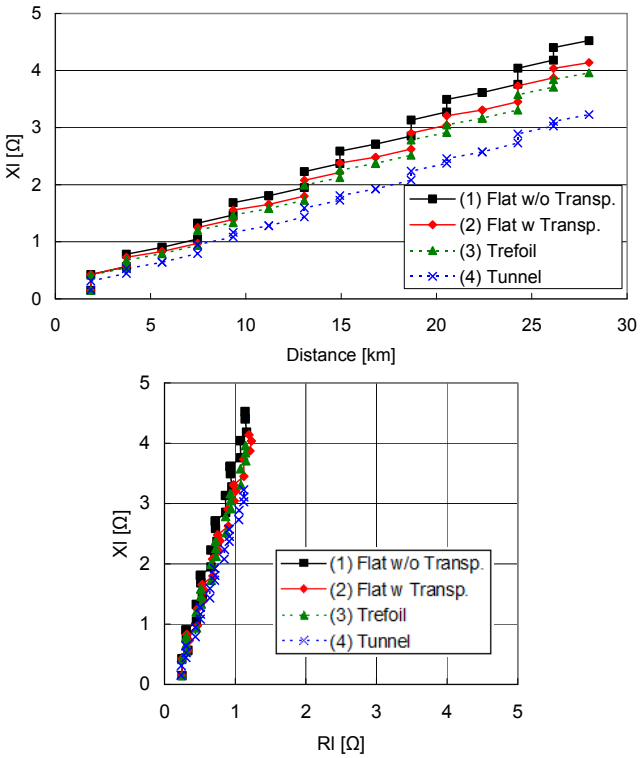

Fig. 18. Ground loop impedance for the ASV – TOR cable line with different cable layouts.

V. EFFECTS OF VARIATIONS IN MINOR SECTION LENGTHS

As the ASV – TOR cable line is currently being planned, exact minor section lengths have not been determined yet. The uniform minor section length 1,867 m was therefore assumed in the calculation.

However, in an actual cable line, minor section lengths vary mainly due to restrictions in cable transportation or burying. The uniform minor section length assumed in the last section contributes to the homogenous nature of the cable line. In an actual cable line, the discontinuity of the ground loop impedance may become larger because of the variations in minor section lengths.

This section studies the effects of variations in minor section lengths using the existing 500 kV 40 km Shin-Toyosu cable line [8], [9]. Since the Shin-Toyosu cable line is laid in a tunnel, minor section lengths range from 0.5 km to 2 km mainly due to the location of manholes.

The ground loop impedance of the Shin-Toyosu cable line is calculated with different laying conditions as shown in Fig. 5. The Shin-Toyosu cable line is laid in a trefoil formation in a tunnel. Even though Fig. 5 assumes the spacing of 0.17 m between phases for a cable in a tunnel, the Shin-Toyosu cable line has no spacing between phases. Only this point is changed from the cable layouts in Fig. 5 so that the calculation is performed with the actual laying condition.

Fig. 19 shows the comparison of the compensated ground loop impedance for different cable layouts. As in the last section, substation grounding resistance was set to 0.1 Ω, and

phase conductor grounding (1) was assumed for the calculation of $k0$. It is interesting to note that large discontinuities are observed where minor section lengths are large.

Table 5 shows proportions of the largest discontinuities of the compensated ground loop reactances against the reactances for the total length for the Shin-Toyosu cable line. The largest discontinuities become smaller compared with those for the ASV – TOR cable line. This is due to the differences in the reactances for the total length, and the effects of the variations in minor section lengths are not noticeable.

TABLE V
LARGEST DISCONTINUITY OF GROUND LOOP REACTANCE AT CROSS-BONDING POINTS FOR SHIN-TOYOSU CABLE LINE

Cable layouts	(1) Flat w/o Transp.	(2) Flat w Transp.	(3) Trefoil	(4) Tunnel
Largest discontinuity	5.0 %	5.3 %	4.5 %	3.2 %

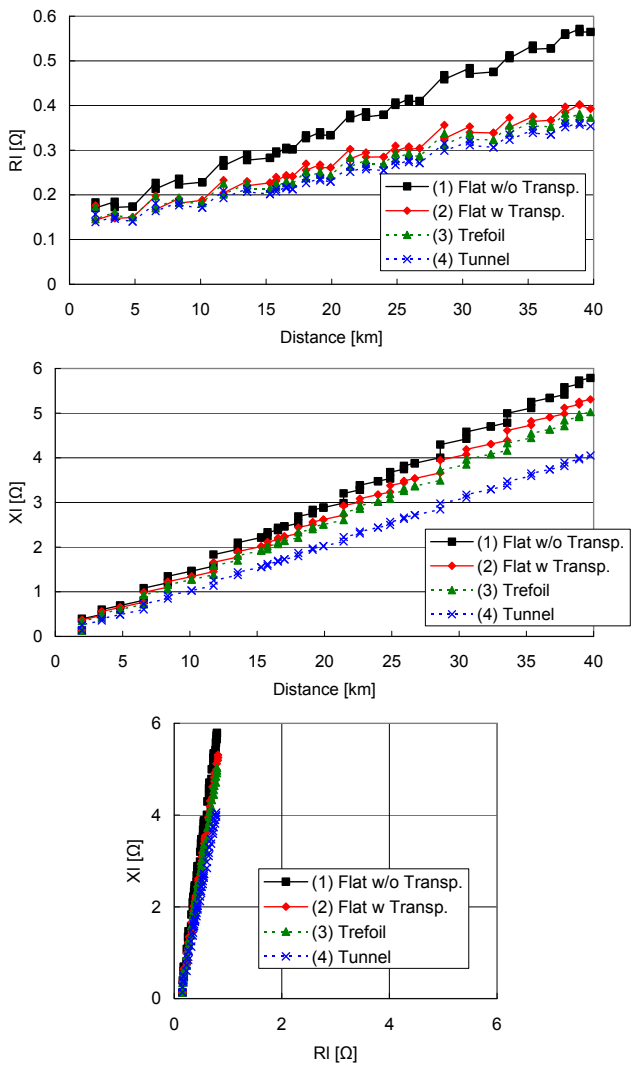

Fig. 19. Ground loop impedance for the Shin-Toyosu cable line with different cable layouts.

VI. CONCLUSION

In conclusion, the analysis of the ground loop impedance has found the following items:

- It is difficult to protect a short cross-bonded cable by the impedance relay without communication as the discontinuities at cross-bonding points can go up to 17 % of the total reactance.
- It is possible to protect the ASV – TOR cable line (long cross-bonded cables) by the impedance relay without communication. The first zone will not overreach to the bus on the other end with the typical setting with the level of discontinuities found in the analysis.
- The substation grounding resistance affects the zero-sequence compensation $k0$. It is necessary to know the setup when the field measurements are performed.
- Since a constant value is assumed for the zero-sequence compensation $k0$, there is a large error in $k0$ when a SLG fault occurs near the relay location.
- Cable layouts and transposition affect the nonlinear characteristic of the ground loop impedance as the discontinuity is caused by an imbalance of impedances between phases.
- A cable laid in a flat formation has a larger discontinuity than a cable laid in a trefoil formation. However, it is difficult to see the difference in a long cross-bonded cable as the difference becomes small due to their homogenous nature [10], [11].
- Variations in minor section lengths do not have a noticeable effect on the discontinuity.

REFERENCES

[1] V. Leitloff, X. Bourgeat, and G. Duboc, “Setting Constraints for Distance Protection on Underground Lines”, in Proc. 2001 7th IEE International Conference on Developments in Power System Protection.

[2] D. A. Tziouvaras, “Protection of High-Voltage AC Cables”, Power Systems Conference: Advanced Metering, Protection, Control, Communication, and Distributed Resources, March 2006.

[3] Statistics of AC Underground Cables in Power Networks, *CIGRE Technical Brochure 338*, December 2007.

[4] *Assessment of the Technical Issues relating to Significant Amounts of EHV Underground Cable in the All-island Electricity Transmission System*, (available on the web) Tokyo Electric Power Company, November 2009, http://www.eirgrid.com/media/Tepco%20Report.pdf.

[5] M. Rebolini, L. Colla, F. Iliceto, “400 kV AC new submarine cable links between Sicily and the Italian mainland. Outline of project and special electrical studies,” *CIGRE Session 2008*, C4-116.

[6] L. Colla, S. Lauria, F. M. Gatta, “Temporary Overvoltages due to Harmonic Resonance in Long EHV Cables,” *IPST 2007*, http://www.ipst.org /techpapers/2007/ipst_2007/papers_IPST2007/Session16/233. pdf.

[7] *Technical report on the future expansion and undergrounding of the electricity transmission grid*, (available on the web) Energinet.dk, April 2008, http://www.energinet.dk/NR/rdonlyres/CC966C3A-FE78-41D8-9D C7-6B455210B502/0/TechnicalReportSummary.pdf..

[8] N. Momose, H. Suzuki, S. Tsuchiya, T. Watanabe, "Planning and Development of 500 kV Underground Transmission System in Tokyo Metropolitan Area," *CIGRE Session 1998*, 37-202.

[9] T. Kawamura, T. Kouno, S. Sasaki, E. Zaima, T. Ueda, Y. Kato, "Principles and Recent Practices of Insulation Coordination in Japan," CIGRE Session 2000, 33-109

[10] N. Nagaoka and A. Ametani, "Transient Calculations on Crossbonded Cables," *IEEE Trans. on Power Apparatus and Systems*, vol. PAS-102, no. 4, 1983.
[11] A. Ametani, Y. Miyamoto, and N. Nagaoka, "An Investigation of a Wave Propagation Characteristic on a Crossbonded Cable," *IEEJ Trans. PE*, vol. 123, no. 3, pp. 395-401, 2003 (in Japanese).

Teruo Ohno received the B.Sc. degree from the University of Tokyo, Tokyo, and the M.Sc. degree from the Massachusetts Institute of Technology, Cambridge, both in electrical engineering, in 1996 and 2005, respectively.
Since 1996, he has been with the Tokyo Electric Power Company, Inc, where he is currently involved in studies on protection relays and special protection schemes. Currently, he is also studying for his PhD at the Department of Energy Technology, Aalborg University. He is a secretary of Cigré WG C4.502, which focuses on technical performance issues related to the application of long HVAC cables. He is a member of IEEE and IEEJ (The Institute of Electrical Engineers of Japan).

Claus Leth Bak was born in Århus in Denmark, on April 13, 1965. He graduated from High School in Århus and studied at the Engineering College in Århus, where he received the B.Sc. with honors in Electrical Power Engineering in 1992. He pursued the M.Sc. in Electrical Power Engineering with specialization in High Voltage Engineering at the Department of Energy Technology (ET) at Aalborg University (AAU), which he received in 1994. After his studies, he worked with Electric Power Transmission and Substations with specializations within the area of Power System Protection at the NV Net Transmission Company. In 1999, he was employed as an Assistant Professor at ET-AAU, where he is holding a Professor position today. His main research areas include Corona Phenomena and audible noise on Overhead Lines, Power System Transient Simulations, Power System Protection and Offshore Transmission Networks. He works as a Consultant Engineer for electric utilities, mainly in the field of Power System Protection. He has supervised app. 20 M.Sc. theses, 10 B.Sc. theses and 8 PhD's. Claus Leth Bak teaches and supervises at all levels at AAU and he has a very large teaching portfolio. He is the author/coauthor of app. 70 publications. He is a member of Cigré C4.502, Cigré SC C4 and Danish Cigré National Committee. He is an IEEE senior member.

Thomas Kjærsgaard Sørensen received the M.Sc. degree from the Technical University of Denmark (DTU) in 2006 and the PhD. degree in the area of High Voltage Engineering also from DTU in 2010. Since 2010, he has been employed in the Grid Planning at the Danish TSO Energinet.dk. His main area of interest is power system transients simulations and insulation coordination studies with focus on system with large shares of cables and combined overhead line and cable systems.