# Hydraulic Yaw System

Stubkier, Søren; Pedersen, Henrik C.; Mørkholt, M.

*Publication date:*
2012

*Document Version*
Accepted author manuscript, peer reviewed version

HydratechIndustries
Wind Power

Department of
ENERGY TECHNOLOGY
Aalborg University

**S. Stubkier,** Hydratech Industries Wind Power
**H. C. Pedersen**, Aalborg University
**M. Mørkholt,** Hydratech Industries Wind Power

# Hydraulic soft yaw system for load reduction

## 1. Introduction

As wind turbines increase in size, combined with increased lifetime demands, new methods for load reduction needs to be examined. One method is to make the yaw system of the turbine soft/flexible and hereby dampen the loads to the system, which is the focus of the current paper.

By utilizing the HAWC2 aeroelastic code and an extended model of the NREL 5MW turbine combined with a simplified linear model of the turbine, the parameters of the soft yaw system are optimized to reduce loading in critical components.

Results shows that a significant reduction in fatigue and extreme loads to the yaw system and rotor shaft when utilizing the soft yaw drive concept compared to the original stiff yaw system.

The physical demands of the hydraulic yaw system are furthermore examined for a life time of 20 years. Based on the extrapolated loads, the duty cycles show that it is possible to construct a hydraulic soft yaw system, which is able to reduce the loads on the wind turbine significantly.

A full scale hydraulic yaw test rig is available for experiments and tests. The test rig is presented as well as the system schematics of the hydraulic yaw system.

## 2. Advantages of hydraulic yaw systems

**The hydraulic yaw system will operate as a shock suspension system on a car,** hence leading the loads away from the wind turbine structure and into the hydraulic system where it can be disputed as heat.

**Implementation of the hydraulic yaw system leads to the following advantages:**

- Robust system in different operating modes
  - No yaw brake needed
- Save the cost of the yaw brake
- Well defined extreme load on the yaw system, no broken pinions, gears or shafts.
- Guaranteed same load on all pinions
- Load reduction - Both ultimate and fatigue loads
- Possibility of self yawing during off-grid operation.
- No broken electrical motors due to generator operation
- Self-yawing at wind speeds above rated
- Detection of yaw error based on pressure measurements
- Same price as for electrical yaw – if hydraulic pitch is utilized.

## 3. Wind turbine model

The model parameters are based on the data of the NREL 5MW turbine W. Musial et al. [7] (mass moment of inertia, dimensions, etc.) and the aerodynamics of the HAWC2 code, which includes the constraints, mass moment of inertia's, damping and spring stiffness of the soft yaw system.

The overall parameters and coordinate specifications may can be found in table 1 and figure 1.

| Overall parameters | Specification |
|---|---|
| Rating | 5MW |
| Wind regime | IEC-61003 Class 1B/Class 6 winds |
| Rotor orientation | Upwind |
| Control | Variable Speed, Collective Pitch |
| Rotor Diameter / Hub Diameter | 126 [m] / 3 [m] |
| Maximum Rotor / Generator Speed | 12.1 [rpm] / 1173.7 [rpm] |
| Maximum Tip Speed | 80 m/s |
| Overhang / Shaft Tilt / Precone | 5[m] / 5[o] / 2.5[o] |
| Rotor Mass | 110,000 [kg] |
| Nacelle Mass | 240,000 [kg] |
| Tower Mass | 347,460 [kg] |

*Table 1: Overall parameters for the NREL 5MW turbine*

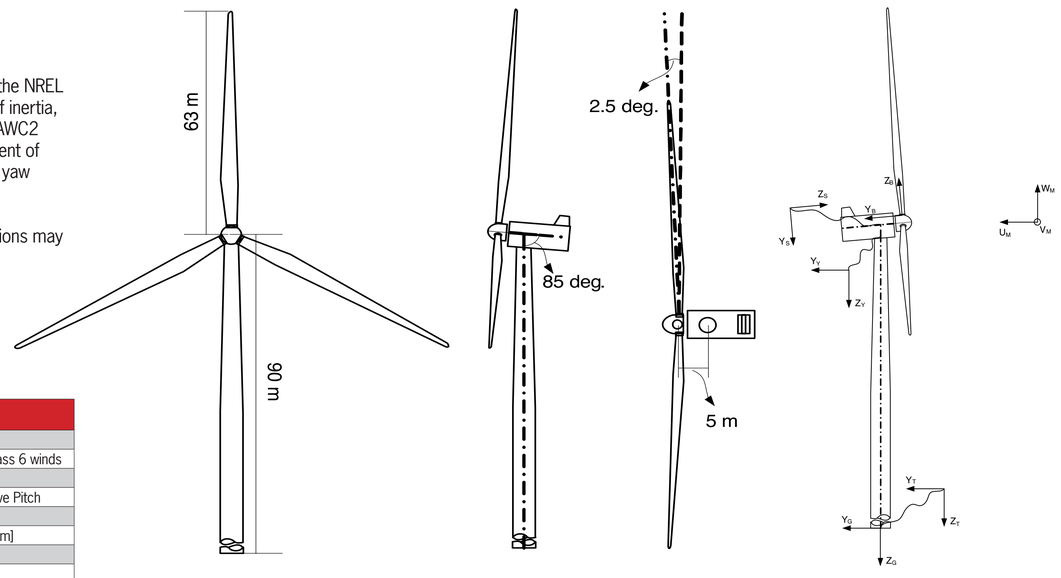


*Figure 1: Overall dimensions and coordinate specification of the NREL 5MW turbine*

## 4. Optimization of Stiffness and Damping

As described the objective of the soft yaw system is to lower the ultimate and fatigue loads on the turbine by letting the system move in a controlled manner. The movement is controlled by the stiffness, K, and damping, B, of the system. To find the optimal solution for this, a graphical solution method is chosen. It is desired to minimize both extreme loads and fatigue loads, why the objective is to minimize

$$f(B,K) = M_{extr} + M_{fat}$$

where Mextr is the extreme load on the yaw system and Mfat is the equivalent fatigue load on the yaw system. Mfat is based on rain-flow counting and Palmgren-Minors partial damage hypotheses.

To find an optimal value of both K and B HAWC2 is utilized. At 24[m/s] respectively, and normal turbulence model (NTM), 22 simulations with different variations of K and B are performed. The values of K and B are selected to fit a damping ratio of 0.5 of a simplified linear model, see Stubkier and Pedersen [10] for a more profound analysis.

The results from HAWC2 are shown in figures 2 and 3. The simulation #1 is the one with the lowest stiffness.

Figure 2 clearly shows how the cost increases with smaller angular movements for simulations at 24 [m/s].

Figure 3 shows the maximum load on the system compared with the maximum angular movement. Notice that the loads decrease when angular movements are below 20 degrees and rises again when the loads angular movements are below 5 degrees; **this indicates an optimal solution range.**

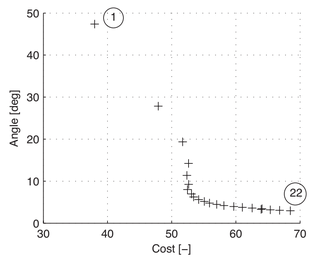


*Figure 2: Maximum yaw angle as a function of the cost for different variations of K and B. 24 [m/s] NTM.*

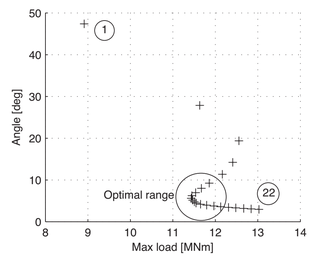


*Figure 3: Maximum yaw angle as a function of the maximum load for different variations of K and B. 24 [m/s] NTM.*

## 5. Results I

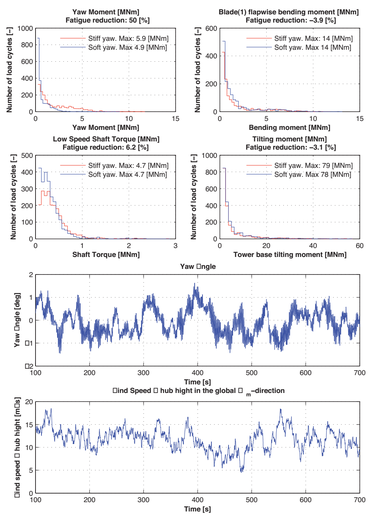

Figure 4: Graphs and results of IEC 61400-1 DLC 1.2 wind speed 12 [m/s] and no yaw error. Soft yaw concept compared to stiff yaw shows a reduction of 51 % in yaw equivalent fatigue loads and a 6% reduction in shaft equivalent fatigue loads. In both cases the maximum ultimate load is lowered by the soft yaw. Blade root and yaw tilt moment both experience an increase in fatigue load.

## 6. Results II

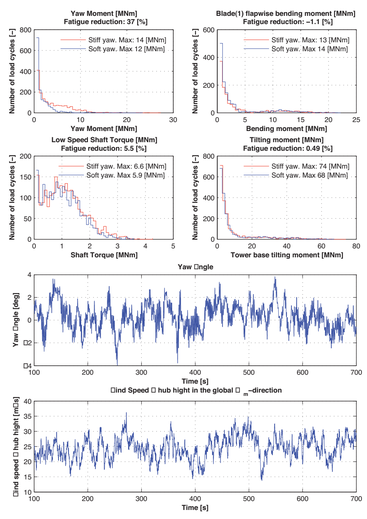

Figure 5: Graphs and results of IEC 61400-1 DLC 1.2 wind speed 24 [m/s] and no yaw error. Soft yaw concept compared to stiff yaw shows a reduction of 39 % in yaw equivalent fatigue loads, a 5% reduction in shaft equivalent fatigue loads and a 0.5% reduction of equivalent fatigue loads on the yaw bearing. In all cases the maximum ultimate load is lowered by the soft yaw. Blade root torque fatigue load increases.

## 7. Load reduction

| | Fatigue reduction [%] | | | | Ultimate reduction | | | |
|---|---|---|---|---|---|---|---|---|
| DLC | Mz,y | Mz.s | Mtilt,y | Mx.b | Mz,y | Mz.s | Mtilt,y | Mx.b |
| 1.2 12 [m/s] | 50 | 6.2 | -3.1 | -3.9 | 17 | 0 | 0 | 1.2 |
| 1.2 24 [m/s] | 37 | 5.5 | 0.5 | -1.1 | 14 | 10 | -7.1 | 8.1 |

*Table 2: Summary of fatigue load reduction from simulations*

Figure 4 and 5 shows the result from simulations of the wind turbine with the stiff yaw system compared to the soft yaw concept with the parameters of K and B corresponding to the optimal values of figure 3. As shown in the figures, huge reductions in fatigue and extreme loads are found for the yaw system and rotor shaft. There is a small increase in the blade flab-wise bending torque and the tilting torque of the tower. The results are outlined in table 2.

Although difficult to quantify, two scenarios exist. Either the turbine is can be made cheaper with the same energy capture, or the turbine is simply increased in size in order to increase the energy capture, but based on the same structure. A relative or absolute calculation of prize reduction is dependent, not only on the specific turbine, but also on the site locations. Such a calculation is not possible before a specific problem is available.

**The idea behind the soft yaw system is to be able to meet the demands for the ever growing sizes of wind turbines, by reduction of the fatigue and ultimate loads on the wind turbine structure and components.**

## 8. Test rig

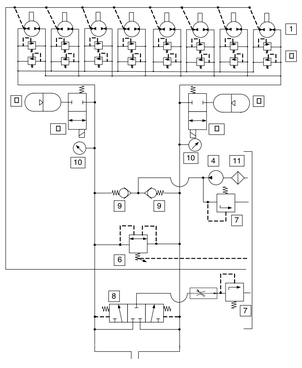

*Figure 6: Schematics of the hydraulic principle of the yaw system*

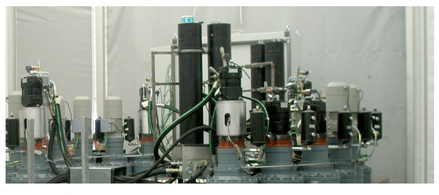

*Figure 7: Picture of the test rig for testing the hydraulic yaw system concept*

The concept of the soft hydraulic yaw system is tested on the full scale test rig shown in figure 6. The test rig consists of 8 hydraulic internal gear motors, which represents the hydraulic soft yaw system in combination with hydraulic accumulators.

1. Hydraulic motor/pumps - 32 ccm
2. Pressure relief valves on motor/pumps – secures overload protection
3. Hydraulic gas/piston type accumulators – adds the spring effect to the system so it is able to move when a load is applied
5. Hydraulic control valves - adds the possibility to control the damping of the system
6. Pressure relief valve – General over load protection of the system
7. Pressure relief valves – controls the boost pressure and flushing pressure of the system
8. Flushing valve - for cooling and cleaning of the oil
9. Check valves for flushing system
10. Pressure transducer – for system monitoring and control

For the test rig eight electrical gear motors acts as load on the yaw system controlled by a servo drive. A picture of the test rig is shown in figure 7 including the electrical motors.

The load spectrum and amplitude is taken from the HAWC2 DLC´s simulations in order to investigate the behavior of the hydraulic system.

## 9. Results III

To obtain the 20 year duty cycle data in the form of speed and load of the hydraulic motors and gears the different DLC's, ranging from 1...25 [m/s] are combined by weighting them according to the PDF and extrapolate the data for the 20 year period.

Figure 6 shows the density plot wrt. yaw motor/pump torque and speed extrapolated over the life time of a wind turbine. The colors of the figure shows the relative time the system operates under given conditions. From the figure it can be seen that the motors have to operate both as motor and pump, and in both directions - i.e. four quadrant operation.

For hydraulic motors, and mechanical gears, these operating conditions are very tough; 500 [Nm] and above 4000 [RPM]. However, as the density of figure 6 indicates, the highest concentration of operating area is in the center of the figure. Analyzing this and limiting the operating

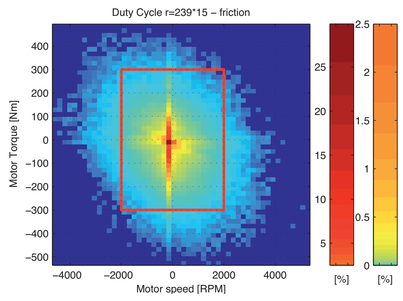


*Figure 8: Density function of operating conditions for the hydraulic yaw system including friction showing the 99.8 percentage area*

conditions for the hydraulic motors to be within 300 [Nm] and 2000 [RPM] would result in a coverage of 99.6% of the operating time. This area is depicted in figure 6, if it is possible to consider the last 0.4 percent as extreme loads and peak velocities the hardware range is much larger.

## Further reading

[1] DS/EN 61400-1: 2005. Wind turbines, part 1: Design requirements, 2005.
[2] Andrew Delaney. Blowing up a storm. European Power News, 31, 2006.
[3] Thommy Ekelund. Dynamics and control of structural loads of wind turbines. In Proceedings of the American Control Conference, Philadelphia, Pennsylvania, June 1998, 1998.
[4] Thommy Ekelund. Yaw control for reduction of structural dynamic loads in wind turbines. Journal of Wind Engi¬neering and Industrial Aerodynamics, 85:241–262, 2000.
[5] Richardo J. Mantz, Fernando D. Bianchi, Hernán De Battista. Wind Turbine Control Systems. Springer, 2007.
[6] H. Ganander. Importance of yaw system of two bladed HAWT, practical and theoretical results. EWEC '89. European Wind Energy Conference and Exhibition, 2:779–82, 1989.
[7] W. Musial J. Jonkman, S. Butterfield and G. Scott. Definition of a 5-mw reference wind turbine for offshore system development. Technical report, NREL, 2009.
[8] KL Jackson. Dynamic response of active yaw drives. Windpower '88:, 1988.
[9] Søren Stubkier, Henrik C. Pedersen, Torben Ole Andersen, and Kristian Markussen. State of the art-hydraulic yaw systems for wind turbines. 2011.
[10] S. Stubkier and H. C. Pedersen. Design, optimization and analysis of hydraulic soft yaw system for 5 mw wind turbine. Wind Engineering, 35:529–550, 2011.

## 10. Conclusion

The poster presented the advantages, turbine modeling, optimization and results from the soft hydraulic concept. Further a full scale test rig is presented for further testing. It is concluded that the results from the loads extrapolated over 20 years shows huge reductions in fatigue and ultimate loads on the wind turbine. Especially the fatigue loads on the yaw system are reduced significantly.

On the hardware side duty cycles for a hydraulic yaw system consisting of eight motor/gear units is presented. This is done for a simple model including friction. Finding the right hardware, which can handle 20 years of operation with the presented duty cycles will lead to significant load reductions on the wind turbine structure.

This might increase the cost of the yaw system compared to an original stiff system, but the total cost of ownership for the wind turbine is expected to be reduced significantly.



**Hydratech Industries**
Suensonsvej 14, 8600 Silkeborg, Denmark
Tel.: +45 87 22 81 81
Fax.: +45 87 22 81 00
www.hydratech-industries.com

**Søren Stubkier**
R&D Engineer, Phd Candidate, Test & Simulation
sst@hydratech-industries.com
Dir. tel.: +45 26 81 92 17