Performance of hybrid quad generation system consisting of solid oxide fuel cell system and absorption heat pump

Cachorro, Irene Albacete; Daraban, Iulia Maria; Lainé, Guillaume; Singh, Navdeep; Liso, Vincenzo

Published in:
Proceedings of the 26th International Conference On Efficiency, Cost, Optimization, Simulation And Environmental Impact Of Energy Systems, ECOS 2013

Publication date:
2013

Document Version
Early version, also known as pre-print

Performance of hybrid quad generation system consisting of solid oxide fuel cell system and absorption heat pump

Irene Albacete Cachorro[a], Iulia Maria Daraban[a], Guillaume Lainé[a], Navdeep Singh[a], Vincenzo Liso[b]

[a] *Dept. of Energy Technology - Aalborg University, Aalborg, Denmark*
[b] *Dept. of Energy Technology - Aalborg University, Aalborg, Denmark, vli@et.aau.dk*

Abstract:

In this paper a system consisting of an SOFC system for cogeneration of heat and power and vapour absorption heat pump for cooling and freezing is assessed and performance is evaluated. Food industry where demand includes four forms of energy simultaneously is a relevant application such a system.
The heat pump is a heat driven system and is running with the heat recovered by a heat exchanger from the exhausted gases from SOFC. The working fluid pair is NH3-H2O and is driven in two evaporators which are working at two different pressures. Thus, the heat pump will operate at tree pressure level in order to meet the bought cooling and freezing demands. This is an innovative configuration for absorption heat pumps because the cascade is implemented only in vapour compression heat pumps. A smaller ratio of the exhausted gases supplies the energy demand for space heating. The SOFC is fuelled with natural gas. The natural gas is first converted to a mixture of H_2 and CO which feed the anode after a preheating step. The cathode is supplied with preheated air and gives, as output, electrical energy. The anode output is the exhaust gas which represents the thermal energy reservoir for heating and absorption heat pump. The model is validated using data available in open literature.
Overall this system shows better performance in terms of efficiency and CO2 emissions compared with cogeneration or tri-generation systems. Specifically, it suits better for applications, such food industry, where refrigeration and cooling requirements are high, and where also a small amount of space heating is needed.

Keywords:

Energy system modeling, Solid oxide fuel cell, Absorption heat pump.

1. Introduction

1.1 Background

The existing cogeneration (e.g. heat and power) and trigeneration (e.g. heating, cooling and power) systems have the purpose to increase the global efficiency of energy production, reducing the greenhouse emissions. The principle behind this is based in a simple idea: diminish all the energy losses and convert them into usable energy, in order to meet the electrical and thermal energy demands.

Conventional cogeneration systems known as Combined Heat and Power (CHP) consist of an internal combustion engine (gas or steam turbine) and with a generator. Together with these main components, there are also various heat exchangers integrated in the system, which allow recovering the exhaust heat from the combustion products. In comparison with the conventional separated production of heat and power, these cogeneration systems are able to decrease the primary energy consumption [1].

The trigeneration systems derive from those for cogeneration. Instead of CHP, now is CCHP, which stands for Combined Cooling, Heating and Power. They consist of a gas engine, a generator and an absorption chiller. The main advantages of these systems in different aspects are: they improve the fuel energy utilization from a 30-45% for typical centralized plants to a 70-90% for tri-generation; emission reduction; and independence from power plants and generation/distribution systems malfunction [2].

1.2 Objectives

Some applications, as some food industry sectors, need simultaneously four forms of energy: freezing, cooling, heating and power. The CCHP systems seen above provide an alternative to meet and solve energy-related problems such as energy shortages, energy supply security, emission control, economy and conservation of energy [2]. In order to maintain the idea of solving these problems and meet the energy requirements of the applications mentioned, this paper proposes a system able to provide freezing, cooling, heating and power at the same time.

The system will be called Combined Freezing, Cooling, Heating and Power (CFCHP) quad-generation system, and consists of a solid oxide fuel cell and a vapour absorption heat pump.

A comparison between the existing cogeneration and trigeneration systems and the quad-generation system presented here is shown in Table 1.

Table 1. Forms of energy provided by different systems for combined energy generation

System	**Forms of energy provided by the system**			
	Freezing	Cooling	Heating	Power
CHP (cogeneration)	×	×	✓	✓
CHP (cogeneration)	×	✓	×	✓
CCHP (tri-generation)	×	✓	✓	✓
CCFHP (quad-generation)	✓	✓	✓	✓

✓ Available

× Not available

The objectives of this study are:

- To propose a novel quad-generation system;
- To evaluate the energy outputs and fuel consumption;
- To develop the mathematical model of the system;

1.2 System description

The proposed system for combined generation of freezing, cooling heating and electrical power consists of a Solid Oxide Fuel Cell (SOFC) for cogeneration of power and heat, and a vapour absorption heat pump which provides both cooling and freezing, along with space heating. A Piping & Instrumentation Diagram of the system is provided in Figure 1.

The SOFC is fuelled with Natural gas, which is externally reformed in a steam reformer. The cell stack is thus fed with a syn-gas mixture comprising mainly of CO and H_2 and traces of CH_4 [3]. Excess air is supplied in order to avoid thermal fatigue in cell components. Cell temperature is maintained at 800 ºC. H_2 and CO undergo electrochemical reactions in the cell stack and provide a constant potential DC power and hot exhaust gases [4]. Flat plate heat exchangers are employed for pre-heating of fuel and air streams [5]. An inverter converts the DC output to relevant AC power. The exhaust gases from the SOFC are employed to run the heat pump.

Compression vapour heat pumps use electrical power for running, while the absorption heat pumps as the one proposed are heat driven cooling machines, which means that they use energy from different sources as waste heat, solar or geothermal to produce refrigeration effect. This allows recovering heat, which is important from both society and end-user point of view, due to the fact that society needs less impact on the climate and the end-user needs to reduce their production costs

through energy saving [6]. The lower impact in the climate is explained not only because they use wasted heat to run, but because the chlorofluorocarbon are replaced with natural refrigerants and the electricity demand is lower compared to the compression refrigeration systems [7].

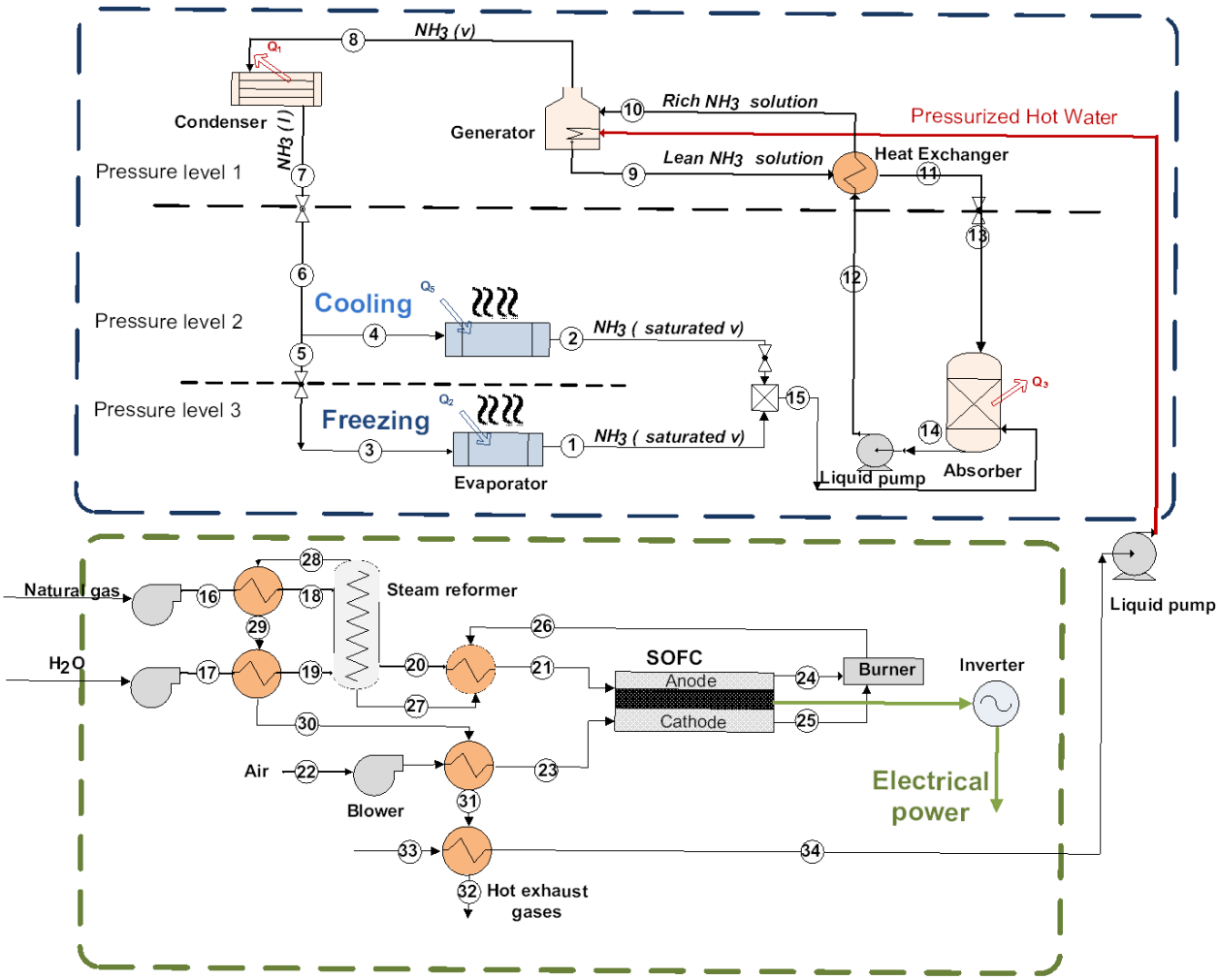

Figure 1: Piping & Instrumentation Diagram for the proposed system consisting in a Combined Freezing, Cooling, Heating and Power (CFCHP) quad-generation system with a solid oxide fuel cell and a vapour absorption heat pump

The most common solution pairs for absorption refrigeration systems are water/lithium bromide (H_2O-LiBr) and ammonia/water (NH_3-H2O). In each pair, the absorbent acts as a secondary fluid that absorbs the primary fluid represented by the refrigerant vapours [8]. When the working fluid is water/lithium bromide, water acts as the refrigerant, which restricts its use for cooling temperatures above 0ºC. Regarding the other working fluid, ammonia acts as the refrigerant, which allows obtaining lower temperatures since its freezing point is -77ºC [9].

For the reason above, the chosen working fluid is ammonia/water, where ammonia, as the refrigerant, is driven into two evaporators at two different pressure levels. As a consequence, the heat pump will operate at three pressure levels, which is an innovative configuration for these absorption heat pumps, so that it can itself provide freezing and cooling with no need of compression or a second refrigerant.

The efficiency of an absorption heat pump is expressed by the coefficient of performance [9]:

$$COP = \frac{cooling\ capacity\ obtained\ at\ evaporator}{heat\ input\ for\ the\ generator + work\ input\ for\ the\ pump} \quad (1)$$

Usually the pump work is not taken into account, since is negligible respect to the heat input in the generator [9].

About the different components in the heat pump, it is important to mention the absorber, whose design has a strong influence on the whole system performance [10]. For systems employing ammonia, the bubble and film type are the most appropriate [11], and between them, bubble-type absorbers are strongly recommended for ammonia/water absorption systems [10]. In the case of the evaporator, an air-cooled evaporator should be used if the aim is to cool the surrounding air directly, and the recommended construction materials are stainless steel or aluminium [12]. Finally, shell and tube or plate condensers could be chosen for a system dealing with ammonia [11], but the higher operating conditions (pressure and temperature) of the shell and tube type may make this kind of condenser a better choice in this case.

2. Methodology

The mathematical model is based on the heat and mass balance has been implemented in MatLab 2010. The fluid properties required such as enthalpies, temperatures and pressures of both ammonia and ammonia/water mixture, have been evaluated using Refprop database, which is called with MatLab.

The excess heat produced by the SOFC can be used for the absorption refrigeration system.

The absorption heat pump requirements, in terms of generator capacity (Q_g), decide the SOFC fuel consumption and size. The absorption heat pump is designed with three pressure levels, a novel configuration for this technology, which provides freezing and cooling effect at the same time. The condenser and the generator are situated in the highest pressure level and the absorber in the lowest one. The pressure is controlled trough the valves, situated in the pressure levels borders. The refrigerant stream is split in the two evaporators, according to the cooling and freezing capacity demands and the resulting ammonia vapours are mixed and brought to the lowest pressure level. The SOFC exhaust gases are passed through a heat exchanger and the hot water obtained is pumped to the generator.

The model of the system is divided in two parts: the absorption refrigeration system model and the SOFC model. The two models are linked together by the exhaust gases-hot source heat exchanger. Through this heat exchanger, the exhaust gases provided by the SOFC are used to heat the water which supplies the generator with energy. A liquid pump is needed to circulate the water from the heat exchanger to the generator (Fig. 10).

The model has been implemented in the following stages:

1. The system is modelled in order to meet the cooling and freezing requirement as base load running on steady state;
2. Depending on cooling and freezing capacities required (Q_C, Q_F), the generator capacity (Q_g) and the pressure in the first pressure level (P_1) are calculated;
3. The temperature of the exhaust gases is calculated from the SOFC model; depending on this, the mass flow rate of the exhaust gases is computed in order to meet the energy requirement of the generator ;
4. Based on the mass flow rate of the exhaust, the fuel consumption rate is determined;
5. The size of the SOFC, in terms of electrical power output, is determined as a function of fuel consumption rate;

6. The proposed quad-generation system ability to provide all four forms of energy is evaluated by space heating capacity and electrical power output determination.

The model structure is presented in figure 2.

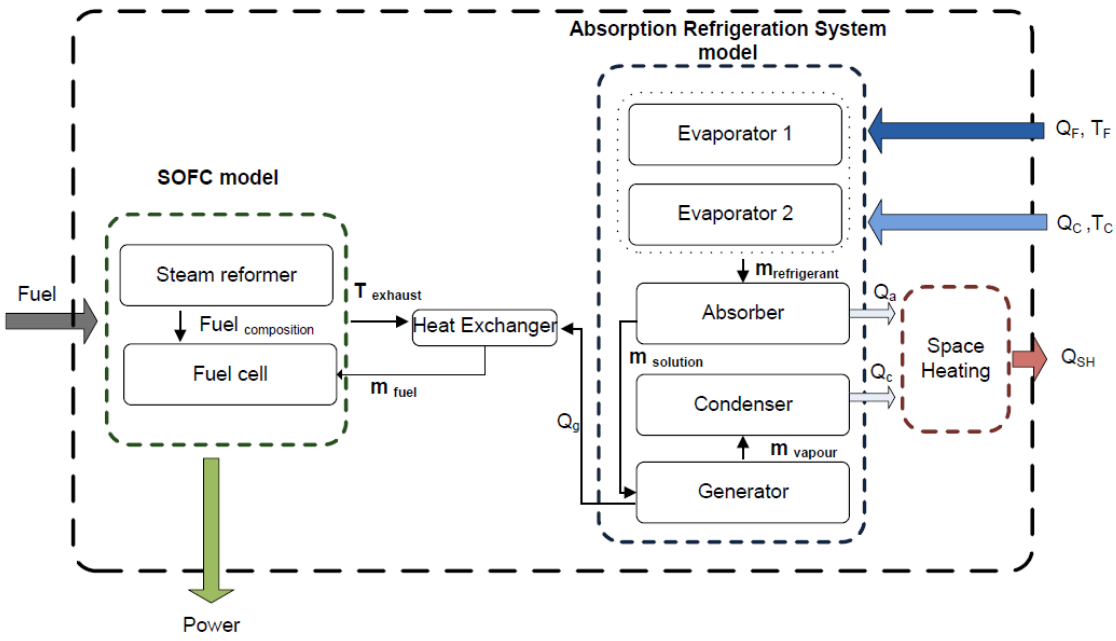

Figure 2: System model description

3. System Model

The mathematical model is aimed at calculating the amount of fuel required to meet a base load of cooling and freezing and thus computing the amount of electricity and space heating obtained along with.

3.1 Absorption heat pump

The assumptions used for modelling the system are presented below:

1. The system is modelled for steady state operation;
2. Saturated liquid: points 7, 9, 13 and 14;
3. Saturated vapour: points 1, 2 and 8;
4. Rich and lean solution: fixed mass fractions of ammonia (x_{14} and x_{13});
5. Percentage of lean and rich solutions remain the same in points 9, 11, 13 and 10, 12, 14;
6. Relation between the mass flow rates for refrigerant and ammonia-water solution in the system are as follows:

$$\dot{m}_6 = \dot{m}_7 = \dot{m}_8 = \dot{m}_{15} \tag{2}$$

$$\dot{m}_4 = \dot{m}_2 \tag{3}$$

$$\dot{m}_3 = \dot{m}_1 = \dot{m}_5 \tag{4}$$

$$\dot{m}_{14} = \dot{m}_{12} = \dot{m}_{10} \quad (5)$$

$$\dot{m}_{13} = \dot{m}_{11} = \dot{m}_{9} \quad (6)$$

7. In the valve and the liquid pump which are working with ammonia-water solution, the temperatures before and after them are the same:
   $T_{11} = T_{13}$
   $T_{14} = T_{12}$
8. The boiling temperature of the solution in the generator is evaluated for the average concentration and temperature of the rich and the lean solutions (points 10 and 9);
9. The absorption efficiency of the absorber is η_a=1;
10. There are no energy losses in the absorber, evaporators and condenser;
11. There are no energy losses when transporting the pressurized hot water from the heat exchanger (point 34) to the generator.

The model equations are as follows:

Evaporator

$$\dot{m}_4 = Q_C/(h_2 - h_7) \quad (7)$$

$$\dot{m}_3 = Q_F/(h_1 - h_3) \quad (8)$$

$$\dot{m}_6 = \dot{m}_3 + \dot{m}_4 \quad (9)$$

Condenser

$$Q_{cond.} = \dot{m}_8 \cdot (h_8 - h_7) \quad (10)$$

Absorber

$$\dot{m}_{15} = L \cdot (X_{14} - X_{13}) \quad (11)$$

$$\dot{m}_{14} = L \cdot (1 + X_{14}) \quad (12)$$

$$\dot{m}_{13} = L \cdot (1 + X_{13}) \quad (13)$$

$$T_{14} = (\dot{m}_{13} \cdot Cp_{13} \cdot T_{13} + \dot{m}_{15} \cdot h_{15} - Q_a)/(Cp_{14} \cdot \dot{m}_{14}) \quad (14)$$

$$Q_a = \dot{m}_{13} \cdot h_{13} + \dot{m}_{15} \cdot h_{15} - \dot{m}_{14} \cdot h_{14} \quad (15)$$

Generator

$$Q_g = \dot{m}_8 \cdot h_8 - \dot{m}_{10} \cdot h_{10} + \dot{m}_9 \cdot h_9 \quad (16)$$

Space heating

$$\dot{m}_{cw} = Q_a/[\overline{Cp}_{cw} \cdot (T_{cw,2} - T_{cw,1})] \quad (17)$$

$$T_{cw,3} = T_{cw,2} + Q_{cond.}/(\dot{m}_{cw} \cdot Cp_{cw}) \quad (18)$$

$$Q_{SH} = \dot{m}_{cw} \cdot Cp_{cw} \cdot (T_{cw,3} - T_{cw,1}) \quad (19)$$

The outputs are key parameters for further calculations since Q_g, determines the most appropriate size of the SOFC, the mass flow rate of refrigerant and solution determines the dimension of the refrigeration system (condenser, generator, heat exchanger and absorber), and the space heating capacity value quantifies the suitability of this quad-generation system, in a specific application. If

the space heating requirements are not met, an external heat source should be provided (e.g. district heating).

3.2 SOFC

SOFC operates at temperaturs about 700 – 850°C. High operating temperature allows a high efficiency of power conversion. It also allows internal reforming of hydrocarbons. Thus, a wide variety of fuels including fossil fuels and bio-fuels can be used to run an SOFC. Due to high temperature exhaust, these fuel cells are suitable for cogeneration.

Steam reformers are used in a way of producing hydrogen. Steam reforming of hydrocarbons (gaseous) is the most efficient way to provide fuel (hydrogen) to a fuel cell.

The natural gas steam reformer used in this system is assumed to work with 100% methane as fuel. The goal of the steam reformer is to remove the maximum of hydrogen (H) from the molecule of methane (CH_4), and also to minimize the production of pollutants.

The SOFC is scaled in such a way to meet the heat requirement of the generator in refrigeration system. This model targets to calculate the minimum size of fuel cell and the amount of fuel required to meet this heat demand. And later, the corresponding electricity and space heating provided by the system are evaluated. Figure 3 depicts a block diagram of the SOFC system.

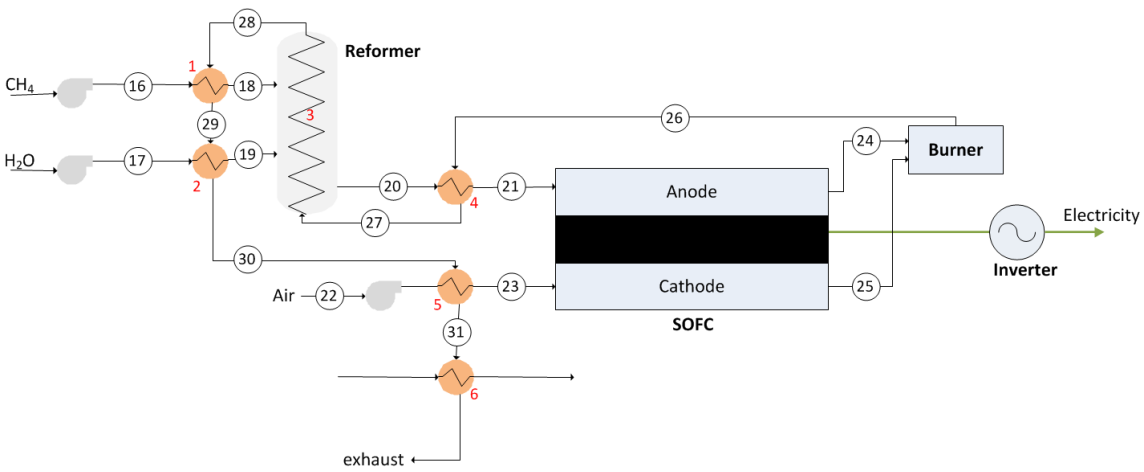

Figure 3 Block diagram of SOFC system

Assumptions involved in modelling SOFC are:

1. Fuel used is desulfurized Natural gas (assumed to be 100% $CH_4$for simplification);
2. The methane conversion in steam reformer is 100%;
3. The steam/carbon ratio for reforming is 3:1[3];
4. Syn gas flowing into fuel cell does not contain any CH_4;
5. Amount of CO at anode inlet is same as that at outlet, thus CO does not undergo any electrochemical or water-gas shift reaction within the cell;
6. Syn gas is fed into SOFC at 750 ^oC;
7. Utilization factor of SOFC (U_f) = 0.8 [4];
8. H_2 and CO present in the exhaust undergo complete combustion in the burner;
9. Current density for fuel cells is assumed to be 3400 A/m^2 [4].

In the steam reformer, based on the reactions (20) and (21), the composition of syn gas fed to the cell stack is calculated stochiometrically.

$$CH_4 + H_2O \rightarrow CO + 3H_2 \tag{20}$$

$$CO + H_2O \rightarrow CO_2 + H_2 \tag{21}$$

At 650 ^oC, reaction (20) is assumed to be complete [3]. Whereas the equilibrium constant for reaction (21) is given by:

$$K_{WGS} = e^{\left(-3.798+{}^{4160}/_{T}\right)} \tag{22}$$

Mass balance of cell stack is based on the electrochemical reaction (23) assuming a suitable utilization factor U_f:

$$H_2 + O^{2-} \rightarrow -H_2O + 2e^- \tag{23}$$

Current density of a unit cell is directly proportional to flow rate of hydrogen into the cell and is given by [31]:

$$i = 2F(\dot{m}_{H2}/n.A_{cell}) \tag{24}$$

where F is Faraday's constant, $\dot{m}_{H2}$is flow rate of H_2 in syn gas, A_{cell} is the area of unit cell and n is no. of cells. For sake of this model, an optimum value of 3400 A/m^2 has been chosen and the no. of cells varies with change in energy demand.

Rewriting equation (24) in terms of electric power output [14]:

$$P_{cell} = 2F.V_{cell}.\dot{m}_{H2} \tag{25}$$

The operating cell potential V_{cell} is calculated as follows [14]:

$$V_{cell} = E_{OCV} - V_{act} - V_{ohm} - V_{conc} \tag{26}$$

Where E_{OCV} is the maximum potential of an SOFC, V_{act} represents activation losses, V_{ohm} are the ohmic losses and V_{conc} is the concentration over potential. These parameters are obtained as follows [4]:

$$E_O = 1.2723 - (2.7645 \times 10^{-4})T_{cell} \tag{27}$$

$$E_{OCV} = E_O + \left(\frac{RT_{cell}}{n_eF}\right) log\left[\frac{x_{H2}.(x_{O2}.P_O)^{1/2}}{x_{H2O}}\right] \tag{28}$$

$$V_{act} = \frac{2RT_{cell}}{n_eF}\left[sinh^{-1}\left(\frac{i}{2i_{O,a}}\right) + sinh^{-1}\left(\frac{i}{2i_{O,c}}\right)\right] \tag{29}$$

$$V_{ohm} = i\left[\frac{L_e}{C_{1e}}exp\left(\frac{T_{cell}}{C_{2e}}\right) + \frac{L_a}{C_{1a}}exp\left(\frac{T_{cell}}{C_{2a}}\right) + \frac{L_c}{C_{1c}}exp\left(\frac{T_{cell}}{C_{2c}}\right) + \frac{L_{int}}{C_{1int}}exp\left(\frac{T_{cell}}{C_{2int}}\right)\right] \tag{30}$$

$$V_{conc} = \frac{RT_{cell}}{n_eF}\left[log\left(1 - \frac{i}{2i_{L,a}}\right) + log\left(1 - \frac{i}{2i_{L,c}}\right)\right] \tag{31}$$

Mole fractions x_{H2} and x_{H2O} for the equation (28) are calculated by dividing respective flow rates by the total flow rate in stream 21. Similarly $x_{O2}$is calculated in stream 23. Values of various parameters in above equations are listed in Table 2.

Table 2 Parameters used in the SOFC model [4]

Parameter	Symbol	Value
Operating pressure (atm)	P_O	1
Number of electrons	n_e	2
Anode exchange current density (A/m^2)	$i_{O,a}$	6500
Cathode exchange current density (A/m^2)	$i_{O,c}$	2500
Anode thickness (µm)	L_a	500
Cathode thickness (µm)	L_c	50
Electrolyte thickness (µm)	L_e	10
Interconnect thickness (cm)	L_{int}	0.3
Anode conductivity constants	C_{1a},C_{2a}	95x10^6, -1150
Cathode conductivity constants	C_{1c},C_{2c}	42x10^6, -1200
Electrolyte conductivity constants	C_{1e},C_{2e}	3.34x10^4, -10300
Interconnect conductivity constants	C_{1int},C_{2int}	9.3x10^6, -1100
Anode limiting current density (A/m^2)	$i_{L,a}$	9000
Cathode limiting current density (A/m^2)	$i_{L,c}$	9000

Energy balance of an SOFC can be written as:

$$\dot{Q}_{fuel} + \dot{Q}_{air} = \dot{Q}_{exhaust} + P_{cell} \tag{32}$$

Substituting Q with enthalpy of components at given temperature,

$$\left(\sum m_i H_i\right)_{in} - \left(\sum m_i H_i\right)_{out} = P_{cell} \tag{33}$$

Since the enthalpies of each component are a function of temperature given as:

$$H^o - H^o{}_{298.15} = At + Bt^2 + Ct^3 + Dt^4 - Et + F - H \tag{34}$$

Values of constants A, B, C, D, E, F and H for each gas were obtained from database in reference [15].

4. Results and Discussion

A temperature profile for the streams of an SOFC system is presented in figure 4. To avoid any thermal stresses, it is important to know the predicted temperatures and choose the material of construction for respective components accordingly.

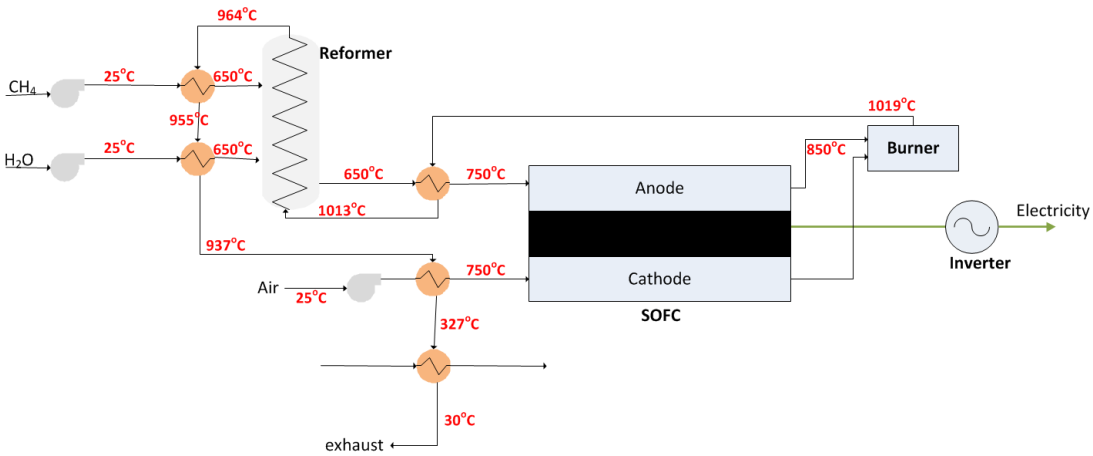

Fig. 4 Temperature profile across the SOFC system

Mass and energy balance of the burner yields the temperature 1019°C. Some important parameters such as efficiency, cell potential, air excess ratio of the fuel cell performance are given in table 3.

Table 3 SOFC system performance

Electrical efficiency	52.9 %
Thermal efficiency	33.6 %
Cogeneration efficiency	86.5 %
Electricity-to-power ratio	1.57
Air excess ratio are	11.8
V_{cell}	0.72

Equating the heat in SOFC system exhaust to the heat required by absorption heat pump, gives required fuel feed and rerunning the model provides with the electrical output of the SOFC.

For given input values (Q_C=60 kW and Q_F=30 kW) considering the freezing temperature -20℃ and cooling temperature 5℃, the system is able to provide, beside the required cooling and freezing capacities, three times more space heating capacity and almost four times more electricity comparing to the refrigeration capacity. All four facilities are provided by 41.65 kg/h natural gas consumption, used by the SOFC. Cooling, freezing and space heating are obtained from heat recovery.

On running the model, to meet a base load of 60kW for cooling and 30kW for freezing, the electrical output of the system is 277.854 kW and space heating output is 277.837 kW. The fuel consumption during the process is 44.478 Kg/h. Since the fuel is assumed to be 100% methane having an LHV value of 50 MJ/Kg, the overall efficiency of the system is about 94%.

Other applications from food processing industry have been analysed. The energy consumption breakdown is listed in Table 4. Power output of proposed system when meeting the base demand for cooling and freezing is shown. For this case scenario, it has been considered a total energy consumption of 100 kW. All situations have been simulated with the model for the proposed quad-generation system.

Analysing the results, it can be noticed that to achieve the initial target of meeting the cooling and freezing demands, the amount of space heating and electricity provided is considerably higher than the one required for each specific application. Taking this in account, the extra energy could be employed to supply administrative buildings or sell it to the grid and the district heating.

Table 4 Energy consumption break-down in food processing industry and a supermarket and quad-generation system outputs

Application	Cooling		Freezing		Heating		Electricity	
	Required	Provided	Required	Provided	Required	Provided	Required	Provided
Meat	50	50	14	14	21	195	15	216
Fish	8	8	75	75	11	256	6	287
Potato	16	16	29	29	44	138	11	154
Vegetables &Fruits	9	9	29	29	50	117	12	130
Danish Supermarket	60	60	30	30	-	275	-	278

5. Conclusions

This paper presents a novel quad-generation system consisting of a Solid Oxide Fuel Cell and an absorption heat pump, able to provide electricity, heating, cooling and freezing. What distinguishes this system from the existing systems is that it can provide cooling and freezing capacity simultaneously using a single refrigerant and heat pump. Furthermore, the heat pump is run employing the recovered heat from the fuel cell exhaust gases, what makes the whole system environmentally friendly.

Based on heat and mass balances, a mathematical model of the system has been built and simulated using input values from real field applications as food processing industries and supermarkets, what has allowed the validation of the model.

Evaluating the fuel consumption and energy outputs of the system, it is remarkable that the amounts of space heating and electrical power provided are significantly higher than the correspondent requirements for the applications studied. A possible way of not wasting this excess is to sell it to the district heating and national electric grid. To connect the administrative buildings from the surroundings is also an alternative. Both cases will require a more detailed analysis of the energy consumption breakdown in each specific application.

Nomenclature

CHP	Combined Heat and Power
CCHP	Combined cooling, heating and power system
CFCHP	Combined Freezing Cooling Heating and Power
SOFC	*Solid oxide fuel cell*
Q_C	Cooling capacity [kW]
Q_F	Freezing capacity [kW]
Q_{cond}	Condenser capacity [kW]
Qg	Generator capacity [kW]
Q_a	Absorber capacity [kW]
Q_{SH}	Space heating capacity [kW]
P_i	Pressure level in the Absorption Heat Pump [kPa]
L	Absorbent (H_2O) mass flow rate [kg/s]
m_i	Mass flow rate [kg/s]

m_{ij}	Molar flow rate of gas 'j' in stream 'I' [mol/s]
x_i	Molar fraction [-]
X_i	Mass ratio [kg NH_3/kg H_2O]
T_i	Temperature [K]
E	Error [-]
η	Efficiency [%]
h_i	Component enthalpy [kJ/kg]
Cp_i	Specific heat [kJ/kg K]
A_{cell}	Unit cell area [m^2]
λ_{air}	Air to fuel ratio [-]
U_f	Utilization factor of SOFC [-]
I	Current density for a unit cell [A/m^2]
F	Faraday's constant
N	No. of cells or mole number
V_{cell}	Operating cell potential [V]
V_{act}	Activation losses [V]
V_{ohm}	Ohmic losses [V]
V_{conc}	Concentration overpotential [V]
E_{OCV}	SOFC maximum potential [V]
Pcell	Cell electric power output [W]
H°	Standard enthalpy
K	Equilibrium constant
ΔH_r	Reaction enthalpy
A	Number of mole

References

[1] V. Havelsky, Energetic efficiency of cogeneration systems for combined heat, cold and power production, International Journal of Refrigeration 22 (1999), 479-485;

[2] D.W. Wu, R.Z. Wang, Combined cooling, heating and power: A review, Progress in Energy and Combustion Science 32 (2006) 459–495;

[3] Jason M. Keith, Mole Balances on Solid Oxide Fuel cells using Natural gas as fuel, Michigan Technological University, 2012

[4] Vincenzo Liso, Yingru Zhao, Nigel Brandon, Mads Pagh Nielsen, Søren Knudsen Kær, Analysis of the impact of heat-to-power ratio fora SOFC-based mCHP system for residential application under different climate regions in Europe, Department of Energy Technology, Aalborg University,2011;

[5] Y. Cengel, Heat and mass transfer- A Practical Approach, 3rd Edition, McGraw Hill, 2006;

[6] P. Brondum, M. Markussen, L. Reinholdt, Utilization of industrial low-grade waste heat by means of new emerging high temperature heat pumps, 4th IIR Conference: Ammonia Refrigeration Technology, Ohrid, 2011;

[7] N.A. Darwish, S.H. Al-Hashimi, A.S. Al-Mansoori, Performance analysis and evaluation of a commercial absorption–refrigeration water–ammonia (ARWA) system, International Journal of Refrigeration 31(2008) 1214-1223;
[8] M.I. Karamangila, S. Coskunb, O. Kaynaklia, N. Yamankaradeniz, A simulation study of performance evaluation of single-stage absorption refrigeration system using conventional working fluids and alternatives, Renewable and Sustainable Energy Reviews 14 (2010);
[9] Pongsid Srikhirin, Satha Aphornratana, Supachart Chungpaibulpatana, A review of absorption refrigeration technologies, Renewable and Sustainable Energy Reviews 5 (2001) 343-372;
[10] José Fernández-Seara , Jaime Sieres, Cristóbal Rodríguez, Manuel Vázquez, Ammonia–water absorption in vertical tubular absorbers, International Journal of Thermal Sciences 44 (2005) 277–288;
[11] Lalit Kumar Bohra, Analysis of a binary fluid heat and mass transfer in ammonia-water absorption, Georgia Institute of Technology December 2007, PhD Thesis;
[12] A. R. Trott and T. Welch, Refrigeration and Air-Conditioning (Third edition), 2000, *Pages 83-92;*
[13] 2012 Ashrae Handbook, HVAC Systems and Equipment, I-P Edition;
[14] James Larminie, Andrew Dicks, Fuel Cell Systems Explained, Second Edition, Oxford Brookes University, UK, 2003;
[15] http://webbook.nist.gov/chemistry/form-ser.html (last accessed: 27/11/2012);