Aalborg Universitet

Grid-friendly Power Control for Smart Photovoltaic Systems

Peng, Qiao; Sangwongwanich, Ariya; Yang, Yongheng; Blaabjerg, Frede

Published in:
Solar Energy

DOI (link to publication from Publisher):
10.1016/j.solener.2020.05.001

Publication date:
2020

Document Version
Early version, also known as pre-print

Link to publication from Aalborg University

Citation for published version (APA):
Peng, Q., Sangwongwanich, A., Yang, Y., & Blaabjerg, F. (2020). Grid-friendly Power Control for Smart Photovoltaic Systems. *Solar Energy*, *210*, 115-127. https://doi.org/10.1016/j.solener.2020.05.001

General rights
Copyright and moral rights for the publications made accessible in the public portal are retained by the authors and/or other copyright owners and it is a condition of accessing publications that users recognise and abide by the legal requirements associated with these rights.

- Users may download and print one copy of any publication from the public portal for the purpose of private study or research.
- You may not further distribute the material or use it for any profit-making activity or commercial gain
- You may freely distribute the URL identifying the publication in the public portal -

Take down policy
If you believe that this document breaches copyright please contact us at vbn@aub.aau.dk providing details, and we will remove access to the work immediately and investigate your claim.

Downloaded from vbn.aau.dk on: December 05, 2025

Grid-Friendly Power Control for Smart Photovoltaic Systems

Qiao Peng[a], Ariya Sangwongwanich[a], Yongheng Yang[a,*], Frede Blaabjerg[a]

[a]*Department of Energy Technology, Aalborg University, Pontoppindastraede 111, 9220 Aalborg, Denmark*

Abstract

The still increasing penetration of power electronics into the modern power systems challenges the entire system stability, which requires more advanced control strategies to address the issues. One of the challenges is the variability of renewable energies, including photovoltaic (PV) systems, which are generally operating with uncertainty and intermittency (non-dispatchable). In this regard, flexible power control solutions are of high interest for PV systems, as an essential function of smart PV inverters, to minimize the adverse impact in grid-integration and operation. On the other hand, PV systems can be adapted to provide ancillary services, e.g., voltage and frequency support through the power control. This paper thus presents an overview of the recent advances in flexible active power control (FAPC) that enables grid-friendly integration of smart PV systems. The demands for the FAPC are introduced from the grid's perspective. Then, various FAPC schemes are reviewed, among which the control strategy by modifying the maximum power point tracking (MPPT) is the most feasible and efficient without any hardware modifications. This is known as the flexible power point tracking (FPPT), which is further illustrated by case studies. Additionally, a power reserve control (PRC) facilitating comprehensive voltage and frequency support to the grid is discussed in detail. Future research perspectives are also presented.

Keywords: Smart photovoltaic systems, flexible active power control (FAPC), grid-friendly integration, flexible power point tracking (FPPT), power reserve control (PRC), frequency control
2019 MSC: 00-01, 99-00

List of Acronyms:

AI	Artificial intelligence
CPG	Constant power generation
DPGS	Distributed power generation system
ESS	Energy storage system
FAPC	Flexible active power control
FPPT	Flexible power point tracking
LVRT	Low-voltage ride through
MAP	Maximum available power
MIC	Module-integrated converter
MPP	Maximum power point
MPPT	Maximum power point tracking
RoCof	Rate of change of frequency
SG	Synchronous generator
PI	Proportional-integral
PLC	Power limiting control
PLL	Phase-locked loop
PRC	Power reserve control
PRRC	Power ramp-rate control
PV	Photovoltaic
P-V	Power-voltage
P&O	Perturb-&-observe

1. Introduction

Solar PV systems are becoming the game changer and the key player in modern power generation seen from the renewable energy resources' perspective. It is expected that the total global-installed PV generation capacity will be over 1 TW (Solar Power Europe, 2019). In some countries, like China and Germany, the strategical development of solar PV power utilization is of high importance (Zhang et al., 2017; Harry Wirth, 2019). However, technical issues may also arise with the large-scale adoption of PV systems. For example, as the power generation of PV systems is largely dependent on the environmental conditions (e.g., solar irradiance level and ambient temperature), there may be unexpected overloading during the peak-power generation periods, which may introduce severe over-voltage issues (David Maxwell, 2013). Similarly, when the irradiance drastically varies (highly intermittent), e.g., in cloudy days, the resultant PV power may cause intensive voltage fluctuations (Woyte et al., 2006). Both issues will challenge the conventional power grid. Thus, proper measures should be taken to mitigate the PV power fluctuation; otherwise, costly power infrastructure upgrading is in urgent need to accommodate the large-scale integration of solar PV systems (Yang et al., 2015). On the other hand, to integrate renewable energies, including PV panels, to the grid, many power electronic

*Corresponding author
Email address: yoy@et.aau.dk (Yongheng Yang)

converters are employed as the interfaces between renewable sources and the grid. It yields power electronics-based systems, where the control and operation of conventional power systems are challenged (Bose, 2013; Peng et al., 2019). In such cases, DPGSs are being required to provide ancillary support to the power grids, e.g., the voltage support and virtual inertia provision (Blaabjerg et al., 2017; Fang et al., 2019).

With the above concerns, it is necessary for PV systems to be more grid-friendly by resiliently and flexibly regulating the output power, instead of being regulated as constant current sources. That is, the PV systems being conventionally taken as a sole power generation unit should be more actively involved in the grid regulation, which should contribute to the grid interoperability. In response to this, many countries and/or organizations, e.g., Denmark (Energinet.dk, 2017), Germany (Tröster and GmbH, 2009), Europe Union (ENTSO-E, 2013), and the USA (IEEE Std 1547-2018, 2018)
have developed or revised their grid codes and standards to ensure a smooth and stable PV integration, where one of the requirements for PV systems is the FAPC. For example, according to the Danish grid code for PV systems, the output power should be flexibly regulated upon demands, as shown in Fig. 1 (Energinet.dk, 2017). Specifically, the possible power control strategies include:

- PLC: The maximum PV output power is limited by a preset threshold, i.e., P_{limit} in Fig. 1, which can be assigned by the system operators or the DPGS operators. This is also known as CPG control in the literature, which is dedicated to tackle the overloading of the grid infrastructure.

- PRC: A certain amount of power P_{res} (i.e., ΔP) is reserved by regulating the actual PV power below the MAP, P_{avai}. It is a predictive and preventive strategy. In response to the frequency events, the reserved power should be readily available to manage to balance the entire system, and then, to maintain the system stability.

- PRRC: The change rate of the PV output power is limited to a certain rate, i.e., R_{r}^{*} in Fig. 1. Such a strategy is to ensure the entire system frequency stability, as a large amount of fast-changing power may lead to frequency excursions (and then, a power system collapse in the worst cases).

Although the power electronics bring certain challenges, they offer high flexibility and controllability of the energy conversion from the PV systems. With the advanced power converter technologies, it is viable and possible to achieve the FAPC in PV systems, in turn, to increase the operation performance of the entire interconnected grid. Notably, to achieve flexible power regulation, not only the PV system control, but also the support from storage and system-level power management might be needed. By implementing the flexible power control strategies with necessary support, the PV systems can produce smooth power to the grid, if required, to handle the environmental intermittency and non-dispatchability (uncertainties). For example, with the PRC, the PV systems are able to release active power when a sudden load step appears (potentially leading to frequency variations). This could be one of the essential functionalities of the future grid-friendly smart PV systems, when integrated into the power electronics-based power systems (Peng et al., 2019), as the inertia is reducing (when the renewable energies are taking over the power generation in the grid). In all, the active power from the PV systems should be flexibly regulated to meet various increasingly stringent demands either through hardware modification or by advanced control techniques.

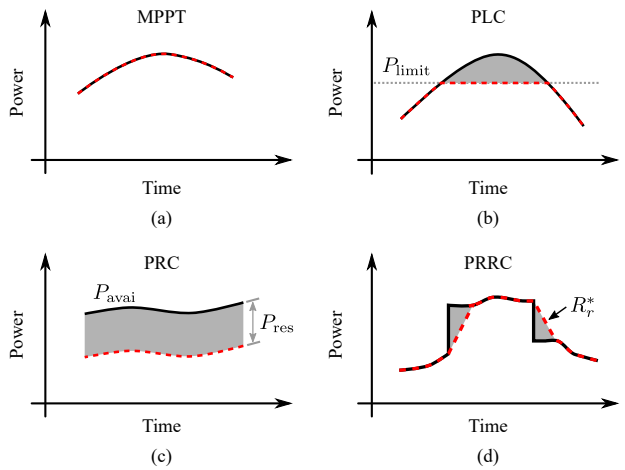

Figure 1: FAPC demands on the grid-connected PV systems according to the Danish grid code (Energinet.dk, 2017) (red dashed line – actually output power; black solid line – available power; P_{limit} – a preset power limit; P_{avai} – MAP from the PV panels; P_{res} – reserved amount of power; R_r^* – ramp-rate limit): (a) MPPT, (b) PLC (CPG), (c) PRC, and (d) PRRC.

In light of the above, this paper presents an overview of the FAPC strategies for modern grid-friendly PV systems. The rest of this paper is organized as follows: in Section 2, the demands for the FAPC are introduced. Then, the possible solutions to realize the FAPC are detailed in Section 3. After that, typical FPPT control schemes are exemplified in Section 4 with case studies. Furthermore, the potential contribution of the FAPC of PV systems, including voltage and frequency support to the grid, is addressed in Section 5, where the MAP estimation is also discussed in order to make a robust operation. Finally, concluding remarks, including brief future research perspectives, are given in Section 6.

2. Demands of Active Power Control

As aforementioned, with the integration of renewable energy resources, including PV systems, several new stability issues are exposed to the power system operators. In order to deal with these issues, the causes and phe-

nomenon should be clearly explored, and then, possible solutions may be developed with the least incurred costs (to maintain the cost of PV energy low). In this section, the concerned issues will be discussed to emphasize the demands on PV systems to achieve active power control.

2.1. Overloading Issue

Note that the P-V characteristics of PV systems are highly dependent on the environmental irradiance and temperature, and therefore, the uncertainty and intermittency of the PV output power are inevitable in practice. As a consequence, with a high penetration degree of PV systems, when the solar irradiance is strong, e.g., in midday, the PV systems will operate in the peak-power generation mode and produce a significant surplus power to the grid, which may adversely affect the entire system (Stetz et al., 2015). In addition to the increased thermal stress on the PV systems (Yang et al., 2014c), the power infrastructure may be overloaded during the short-term peak-power-generation period. This may cause failures and accelerate the aging of the system. In recent years, the overloading issues are being realized to be crucial for PV-penetrated power systems. For instance, it is found in the Indian power grid that if the PV system penetration rate exceeds 75%, the potential overloading may affect the transmission lines and the distributed transformers to a large extent (Joerg Gaebler, 2017). Moreover, it has been found in the Northern Ireland distribution grid that the high-level PV penetration would cause serious overloading (David Maxwell, 2013). Upgrading the power infrastructure is a solution to this issue, but it is not economically desired due to the incurred high-capacity costs (Yang et al., 2016).

To avoid potential overloading, one of the most effective solutions is the PLC strategy. With the PLC strategy, the maximum PV output power even during the midday in the summer time is limited to a certain level, and then, the overloading issue is effectively addressed. This has been implemented in the German power grid (Stetz et al., 2013), where it has also been found that the associated energy loss is insignificant, as the PV systems will occasionally operate in the peak-power generation mode. At the same time, it also alleviates the thermal loading on the power converters, which might age them fast (Yang et al., 2014c). Another means to address the overloading is to add ESSs, so that the surplus energy can be absorbed by ESSs during peak-power generation periods. Additionally, the grid-friendly PV penetration level can be further increased (Denholm and Margolis, 2016), and the entire system flexibility is enhanced by installing ESSs. However, such a solution is also not cost-viable to date.

2.2. Voltage Fluctuation and Stability

As mentioned previously, the PV output power characteristics highly rely on the environmental conditions. Thus, in addition to the overloading that may appear during the peak-power-generation period, the sudden loss or increase of a large amount of PV power generation due to the intermittency also poses significant challenges. This commonly happens in cloudy days, where the passing clouds would introduce partial shading (Woyte et al., 2006) and also power fluctuations. Furthermore, the PV system size and distribution distance have a significant impact on the PV power ramp-rate behavior and the fluctuation severity (Hossain and Ali, 2014). In addition, to comply with relevant requirements, smart PV systems may be intentionally disconnected in response to faulty conditions, which, however, may induce voltage stability in the entire system.

In order to damp the power and voltage fluctuations of PV systems, and also maintain the system stability, the power ramp-rate should be constrained in operation. Accordingly, various PRRC strategies are developed to achieve so in the literature, e.g., in (Alam et al., 2014; Sangwongwanich et al., 2016a). The main concept is to limit the ramp-rate of the PV output power in a way to alleviate the fluctuation. Within an acceptable range, the PV systems can operate in the MPPT mode to facilitate the utility of PV energy. Once the power ramp-rate reaches the threshold, the PRRC should be taken to make the PV systems to operate in a ramp manner (i.e., reducing the out power or increasing the output power through the reserved power or ESSs), as it is demonstrated in Fig. 1.

2.3. Frequency Regulation

Power electronics are essential to integrate PV systems into the grid. In such a power electronics-based system with reduced physical inertia, one of the most important issues is the frequency stability. In conventional power systems, the frequency is mainly governed by SGs, which have essential mechanical inertia to deal with frequency events (Tielens and Van Hertem, 2016). When an intense load step or shedding occurs, the SGs regulate their rotors to damp the sudden power imbalance between the generation and the grid, and then, the frequency deviation of the entire grid is slowed down. However, when the SGs are being replaced by DPGSs, if there are no additional actions, the power electronics-based DPGSs (e.g., PV systems) would not response to the power imbalance like what the conventional SGs do, and then, the system may lose its ability to damp the oscillation (instability) (Fang et al., 2019). Thus, it is urgent for the DPGSs, including PV systems, to emulate virtual inertia by redesigning their control methods. On the other hand, without special control strategies, the PV systems are presently designed to disconnect from the grid, when there is severe frequency instability, which will make the event more serious. This non-compliant frequency disconnection setting yields a high risk for the systems of facing a blackout (ENTSOE, 2014; Kroposki, 2016). Additionally, it is also possible to have severe PV generation loss in the case of a clear day with solar eclipse (Máslo, 2016), which should be considered.

Hence, the grid code in terms of PV-grid connection is being continuously updated, i.e., the PV systems should not disconnect from the grid immediately after a frequency deviation but to provide support to the grid (to withstand the frequency deviation). In response to this demand, the PRC should be implemented in the PV system control, where a certain amount of active power should be reserved. In such a case, the PV systems can utilize the reserved power to support the grid during frequency instability events, by which the system inertia can be enhanced. Additionally, the coordinated operation of the PV systems with ESSs to cope with the frequency regulation is important and it is an effective and promising solution, which will be elaborated in the following.

3. Active Power Control Solutions

To deal with the issues introduced by the PV integration and develop grid-friendly PV systems, the FAPC is important, as discussed in the previous section. In spite of modifying the PV control strategy, the support from additional devices (e.g., ESSs) and the operating policy is critical as well in grid-friendly PV systems. In this section, the most widely-implemented solutions for the FAPC of PV systems are presented.

3.1. Energy Storage-based Strategies

As mentioned previously, the ESSs are one of the essential components to advance more grid-friendly PV systems, especially for those with the FAPC. By applying ESSs, the PV systems can overcome the drawbacks of intermittency and uncertainty to a large extent. At present, a combined installation of PV panels with batteries (referred to as PV-ESS systems) is drawing much attention across the globe (Chiang et al., 1998; Nandi and Ghosh, 2009). In PV-ESS systems, due to the high energy density and flexibility, the storage device (e.g., batteries) can compensate for the power shortage or store the surplus in operation. Consequently, it is possible for the PV-ESS systems to generate the power steadily and constantly according to the grid requirements (see Fig. 1). Fig. 2 exemplifies a PV-ESS system, where the power flow directions are also indicated. When the ESSs are employed, the curtailed PV power can be minimized by optimally coordinate the charging/discharging among the ESSs (Zeraati et al., 2019), and the PV output power fluctuation caused by the environmental changes can be efficiently damped by the ESS (Omran et al., 2011; Li et al., 2013). Moreover, the ESS successfully helps to limit the power ramp-rate within the allowed range (Ai et al., 2018), and the power can be reserved as required (Hollinger et al., 2016).

Although the employment of ESSs in PV systems helps significantly to improve the system stability and flexibility, it is not always cost-effective. In other words, the total cost of PV-battery systems is still the major barrier for large-scale adoption (Bacha et al., 2015). Due to the high costs

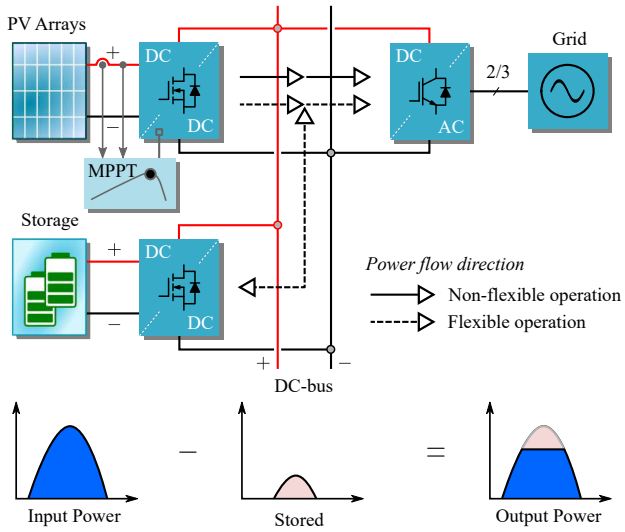

Figure 2: FAPC of a PV system with the employment of ESSs.

of material, operation and maintenance, the warranty period of commercial batteries is usually less than 10 years (SMA AG, b). However, the warranty period of commercial PV inverters is usually up to 20 years (SMA AG, a), and the PV arrays/panels have an even longer warranty period (e.g., 25 to 30 years). Thus, except for economical considerations, the application of ESSs may bring lower reliability and higher failure rate into the systems. The exploitation of storage devices to enable the control flexibility of grid-friendly PV systems is still on the low-power and small-scale levels, e.g., residential PV applications with a power rating typically below 6 kW.

Nevertheless, the use of storage systems can largely increase the operational and control flexibility. Along with the declining price of storage technologies, more PV-ESS systems will be seen in the future power grid (Boicea, 2014; Carrasco et al., 2006). Notably, when implementing ESSs to support PV systems, two factors should be considered:

- *Charging Scheduling*: Traditionally, the ESSs are charged in off-peak load hours and discharged in peak load hours. It is not efficient for PV systems with the FAPC. Instead, with the consideration of maximizing the benefits of ESSs, e.g., line loss reduction, power quality enhancement, and peak shaving, etc. For instance, the line loss of the distribution systems integrating sizable PV systems can be minimized by solving the optimal charging/discharging scheduling of ESSs (Teng et al., 2013). Furthermore, the real-time irradiance forecasting can help to determine the optimal capacity of ESSs that can maximize the sum of multiple benefits, including peak shaving, deviation minimization and frequency regulation (Wang et al., 2017).

- *Storage Sizing*: With the economical considerations, the storage size should further be designed reasonably. It can be designed based on the operational

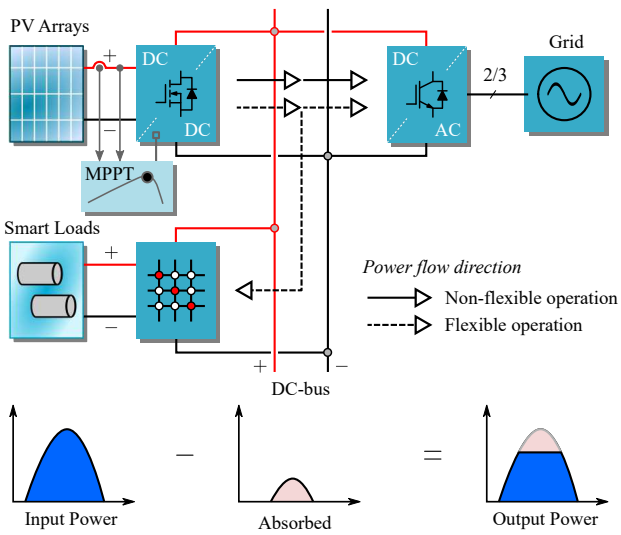

Figure 3: FAPC of a PV system with smart loads to absorb the excessive power in operation.

reliability and energy utilization efficiency analysis (Koh et al., 2015). Likely, the optimal benefits in terms of power generation, peak power support, and reduced line losses can be considered in the analysis, and then, a multi-objective optimized design can be achieved (Yang et al., 2018b).

Notably, in addition to the extra storage units, the DC-link capacitors, which are essentially small-capacity ESSs, are inherently used in power electronics converters. Those DC-link capacitors can also be utilized to achieve the FAPC of PV systems. Although it is not possible to provide large-capacity and long-term service by the DC-link capacitors, the indispensable transient power buffer can be flexibly attained. For instance, in residential PV systems without ESSs, the additional control for the DC-link capacitors can be designed to make the system more grid-friendly for inertia provision (Fang et al., 2018).

3.2. Demand Side Management

In addition to the support from ESSs in the power generation side, attempts can be made from the consumption side to achieve flexible active power regulation. One possible solution is the local flexible loads (also referred to as dump loads). Similar to the storage-based solution, when there is a power surplus from the PV system, the flexible load can be automatically adjusted to absorb the power surplus (Omran et al., 2011), as it is illustrated in Fig. 3. A flexible load usually consists of a resistor and a power flow controller, by which the load can be regulated according to the grid power flow dispatching. Thus, unlike ESSs, the flexible loads cannot store the surplus energy, but dump the excessive power as heat. That is to say, if needed, the flexible loads are disabled to "virtually" release the power that was excessive. This makes it not efficient and economic-attractive.

Clearly, when operating in the flexible power control mode, the dump loads should be flexibly controlled. In smart grids, this can be realized by user-controlled load units (e.g., electrical vehicles or washing machines). The users are encouraged to charge the vehicles or switch the machines on when there is power surplus from the PV systems or other renewable energies. These developed dump loads are called "smart loads", and the corresponding energy coordination method is referred to as demand side management (Palensky and Dietrich, 2011). With the demand side management, the surplus power or the power shortage of PV systems can be balanced quickly and efficiently without wasting the excessive power (Yi et al., 2018). However, the smart loads need to precisely follow the up-to-date grid energy distribution; otherwise, the power surplus may not be consumed, and the power shortage may be deteriorated (Gungor et al., 2011). Thus, real-time communication (Sechilariu et al., 2013) and efficiently coordinated control (Nunna and Doolla, 2014) are mandatory for the demand side management, which challenges its extensive applications in practice. In addition, another strategy by continuously cutting-in or -out the PV generation units according to the demands can be adopted to achieve the power regulation (Yang et al., 2018a), which, however, shares the same drawbacks with the demand-side management strategy (using dump loads), and more importantly, it may cause instability.

3.3. Modified-MPPT Schemes (FPPT Strategies)

As the ESS- and demand-side-management-based methods introduce additional costs, attempts have been made to explore the self-supporting methods for PV systems to realize the FAPC (Yang et al., 2018a). This concept devotes to maximize the utilization of power electronics, including the high flexibility and controllability. In such a case, the PV systems can regulate the output power flexibly without additional hardware devices. However, conventionally, the PV systems are controlled by an MPPT strategy to optimize the power generated from the PV arrays. With an MPPT, the PV systems are always seeking the MPP. As a result, when the solar irradiance drops suddenly, corresponding to a sudden drop of the MPP, the PV output power will have severe fluctuations.

To facilitate the self-support flexible power control, the MPPT strategy should be modified for more functionalities, being the FPPT. As shown in Fig. 4, the PV systems are able to regulate the output flexibly by advanced control algorithms without additional hardware devices. The essence of the FPPT is the ability to generate a constant power output according to the MAP. Hence, it is necessary to estimate the MAP on the P-V curve according to the operating conditions. Once it is estimated, the PV system can pull down the operating point below the MPP to reserve a certain amount of active power (curtail the power) (Yang et al., 2014c; Ahmed et al., 2013), as shown in Fig. 4. The P-V curve of a PV system with the FPPT control by limiting the output power is shown

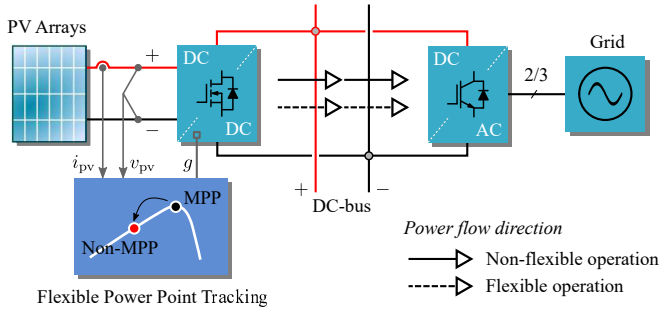

Figure 4: FAPC of a PV system by modifying the MPPT control strategies, being the FPPT algorithms.

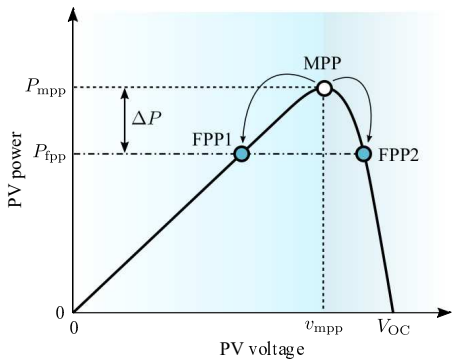

Figure 5: P-V characteristics of PV arrays with possible operating points for the FPPT control (P_{mpp} – MPP; P_{fpp} – output power in the FPPT operation; v_{mpp} – voltage at the MPP; V_{OC} – open-circuit voltage).

in Fig. 5. It can be seen from Fig. 5 that there are two power limiting points, i.e., at the left and the right sides of the MPP (FPP1 and FPP2). The right power limiting point can achieve fast dynamics, but the method also faces the risk of operating at the open-circuit voltage condition and it might have large steady-state variations. In contrast, operating at the left side helps to reduce the steady-state oscillations, but the dynamics are slower (Yang et al., 2016). Additionally, it typically requires a double-stage power converter configuration to ensure the proper power injection into the grid under low input voltages.

The modified MPPT-based strategy eliminates the costs for additional devices, e.g., batteries, dump loads, and high-quality wide-area communication systems. It also enhances the system reliability due to the reduction of failure-prone components (e.g., sensors), and also gives a relatively smooth thermal loading profile on the power converters. However, it should be noted that the modified MPPT-based strategy (i.e., the FPPT) makes the PV systems operate in the reduced power-generation mode without storing the curtailed power. It reduces the overall energy production from the system, which may affect the total costs of the large-scale interconnected systems (Brouwer et al., 2016). Consequently, it becomes important to carefully design the FPPT strategy to balance the gain (e.g., lower thermal loading and smoother power injection) and loss (e.g., energy losses) (Yang et al., 2017).

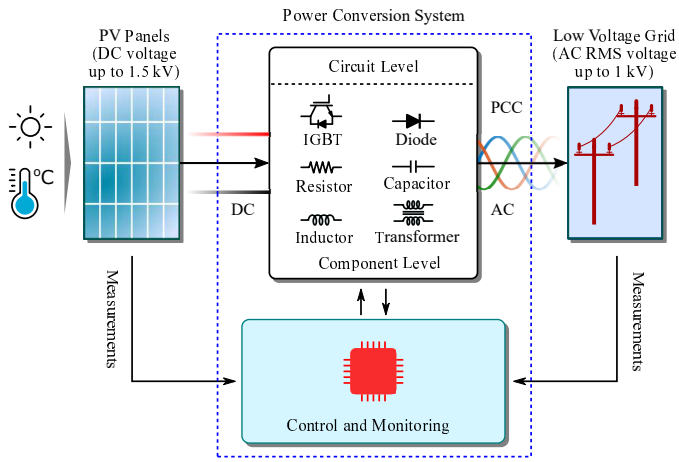

Figure 6: General grid-connected PV systems, where the power converter is responsible for the power conditioning according to the grid requirements (PCC – point of common coupling; RMS – root-mean-square; IGBT – insulated-gate bipolar transistor).

4. FPPT Control

Based on the modified MPPT control principle, different PV control strategies can be developed to achieve the FAPC, e.g., PLC, PRRC, and PRC. In this section, these advanced control strategies without using ESSs as a part of the FPPT strategies will be exemplified with case studies, which are cost-effective and application-friendly. Furthermore, the ESSs can be implemented with additional coordinated control when required.

4.1. Grid-Integration of PV Systems

In general, the grid-integration of PV systems involves several components, as shown in Fig. 6, where the PV panels are the power sources, the power electronics converter is in charge of the power delivery to the grid (i.e., to realize the power conditioning), and the grid as the load has specific requirements that should be followed. As seen from Fig. 6, the power converter is very important for the PV energy conversion. Various requirements/demands from the grid can be achieved by properly controlling the power interfacing converter. Thus, to achieve flexible active power of PV systems, the most crucial task is to properly design the control strategies for the power converters. That is, the FAPC is implemented in the "Control and Monitoring" unit, as shown in Fig. 6.

Regarding the power converters for PV system integration, different configurations are available, as shown in Fig. 7 (Kjaer et al., 2005; Yang et al., 2018a). The system configurations are categorized according to applications and power ratings. The details of the popular PV integration configurations are given as follows:

- *MIC*: It is more commonly seen in small-capacity PV systems (Liang et al., 2011), as shown in Fig. 7(a). It can further be categorized into DC optimizer and micro-inverter technologies. The most significant advantage of the MIC solution is the high flexibility and

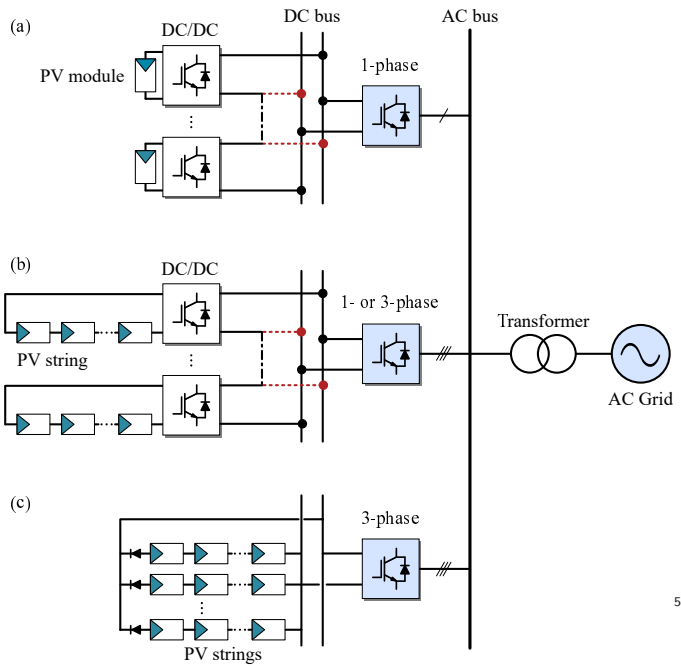

Figure 7: Grid-integration of PV systems through various configurations: (a) PV-MIC, (b) PV string inverter, and (c) central inverter solution.

high modularity, as each MIC and the panel is controlled by an independent controller and individual MPPT strategy. However, due to the low PV module voltage, this method requires a high conversion ratio for the MIC and longstanding high efficiency for grid integration, which challenges the converter design.

- *PV String/Multi-String/Central Inverter Solution*: It is usually adopted for medium- and large-capacity PV systems. At present, the string inverter technology shown in Fig. 7(b) is still the most widely applied for PV integration in Europe (Karolien Peeters et al., 2018). On the other hand, the demand in high-power conversion systems drives the development and exploitation of central inverters, as shown in Fig. 7(c). This solution can achieve high power conversion efficiency, and the DC-DC conversion stage is usually optional. Notably, in low-voltage systems, the maximum DC-link voltage for PV systems can be 1500 V, which can further improve the overall efficiency for central inverter systems. One of the issues for string, multistring, and central inverters is the power mismatch under partial shading on the panels, where the system has difficulties to find the optimum power from the PV panels.

Another factor should be considered in the grid integration of PV systems is the size of the PV systems. For example, for a single PV module, the PV voltage is usually not enough for grid connection, and thus, a DC-DC MIC (as an optimizer) is mandatory to increase the DC-link voltage to the minimum requirement (e.g., 400 V DC-link voltage for a 230-V grid) (Li and Wolfs, 2008). On the contrary, for the string and central inverter-based solution, the PV voltage is usually high enough for grid connection thanks to the aggregated multiple PV modules. Therefore, the DC-DC converter can be saved, as mentioned previously, and the single-stage configuration can be realized. It makes the PV system more efficient with reduced power losses (Zhang et al., 2015). However, due to the lower robustness of the single-stage configuration, the two-stage configuration is still favorable for string- and multi-string inverters (Mihai Ciobotaru et al., 2006). In this section, a two-stage single-phase PV system is adopted to demonstrate FPPT. The system configuration is shown in Fig. 8, where the general system control is also presented.

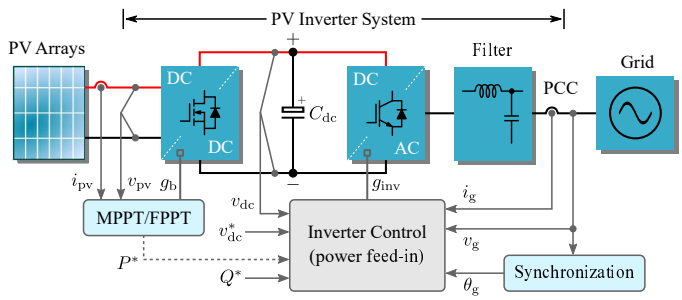

Figure 8: A two-stage single-phase grid-connected PV system (v_{pv}, i_{pv} – PV voltage and current; v_g, i_g – grid voltage and current; v_{dc}, v^*_{dc} – DC-link voltage and its reference; θ_g – grid voltage phase; P^*, Q^* – active and reactive power references; C_{dc} – DC-link capacitor).

4.2. MPPT

As the FPPT control is based on the MPPT control, it is necessary to discuss the MPPT control for PV systems. As shown in Fig. 8, for two-stage systems, the DC-DC converter is responsible for the MPPT or FPPT, while the DC-AC inverter is in charge of the DC-link voltage control to achieve power feed-in (Blaabjerg et al., 2006). Specifically, the DC-DC converter regulates the PV output power by adjusting the PV array operating point, which is determined by the PV voltage. As a consequence, the MPPT strategy tracks the MPP and sends the corresponding PV voltage reference to a PI controller, and then, the duty cycle of the DC-DC converter (denoted as g_b in Fig. 8) can be obtained. As the DC-DC converter is in charge of the PV power regulation, the DC-AC inverter should control the DC-link voltage for grid connection. For the inverter control, typically, a dual-loop structure is adopted, where the outer voltage controller (or power control loop) generates the current amplitude reference I^*_g, and the inner current controller can then produce the voltage reference to modulate the inverter (the modulation signal is denoted as g_{inv} in Fig. 8). Notably, the current reference should be synthesized with the grid voltage phase (see θ_g in Fig. 8), also known as grid synchronization, which is commonly achieved through a PLL.

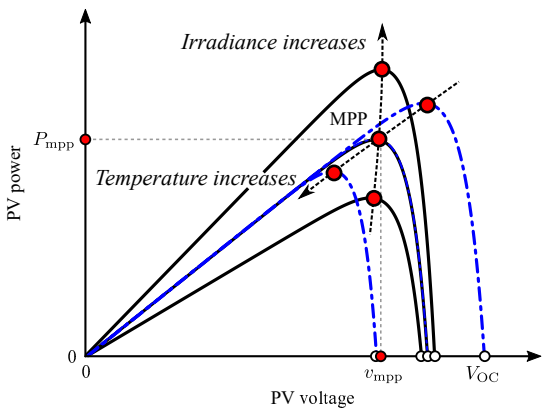

Figure 9: Characteristics of PV arrays. MPPT algorithms are required to track the MPP in operation.

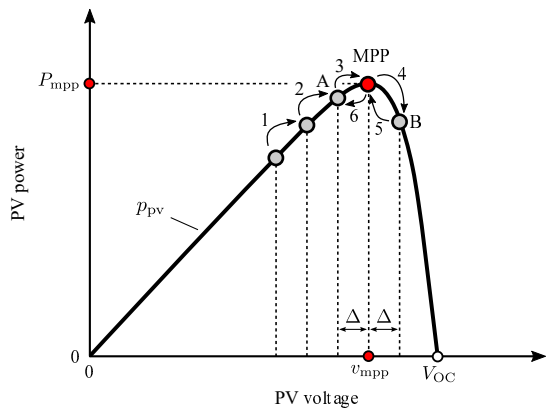

Figure 10: Illustration of the P&O-based MPPT algorithm (δ – the perturbation step, p_{pv} – PV power curve).

The P-V curves alter with the ambient conditions, as shown in Fig. 9. Accordingly, to optimize the utilization of solar energy and the conversion efficiency (Faranda et al., 2008), MPPT strategies are extensively used, which are implemented in the control of the DC-DC converter to constantly seek for the MPP on the P-V curve (Hua et al., 1998). Among various MPPT control algorithms, the most widely used MPPT technique is the P&O algorithm that is simple for implementation (Esram and Chapman, 2007). The DC-DC converter duty-cycle is generated periodically, where the PV voltage can be perturbed in every MPPT control cycle (e.g., 10 to 100 Hz). Then, the output power is observed and compared with the measured from the previous cycle. According to the power variation, the new PV voltage reference is updated (and the duty-cycle), making the system move toward the MPP (Femia et al., 2005). The P&O-based MPPT is exemplified in Fig. 10. Initially, the PV system is perturbed by three steps, working at MPP (A to MPP). At this moment, the voltage reference is increased, leading to that the operating point moves to B. Then, the power change is observed as negative, so the perturbation changes its direction and reduces the reference by Δ, i.e., B to MPP, as shown in Fig. 10. Clearly, the P&O MPPT can not make the system operate steadily at the MPP; instead, the operating point will oscillate around it. This means that the P&O MPPT design should consider the dynamic and steady-state tracking accuracy.

Developed from the conventional MPPT, there are several modified MPPT algorithms. For instance, the voltage perturbation step can be designed to be adaptive to the power deviation (Khaehintung et al., 2006), where a larger perturbation step can be set corresponding to a large observed power deviation. The incremental conductance and other advanced MPPT methods can also be adopted to increase the tracking accuracy and dynamic performance under rapidly varying conditions (Liu et al., 2008; Mei et al., 2011). Moreover, MPPT based on AI algorithms such as particle swarm optimization (Koad et al., 2017), artificial neural networks, and fuzzy logic (Kermadi and Berkouk, 2017) are emerging, which may make the energy harvesting from the PV system more accurate and efficient. To realize the FAPC, the MPPT can be modified as an FPPT. As aforementioned, the P&O MPPT is the most common one, based on which the following FPPT techniques are derived. Notably, other MPPT methods are also applicable.

4.3. FPPT Control Algorithms

In this section, according to the requirements shown in Fig. 1, three basic FPPT control techniques are presented for grid-friendly PV systems. Notably, the focus of this section is the power regulation strategies instead of the power point tracking algorithms, where the discussion about the latter can be found in (Dehghani Tafti et al., 2020). To demonstrate the FPPT algorithms, experimental tests on a double-stage single-phase system will also be presented, referring to Fig. 8. Furthermore, possible applications of these basic FPPT strategies are introduced, where the FPPT strategies can be flexibly adopted and modified to meet requirements.

4.3.1. PLC

The basic principle of the PLC is to set an upper power threshold for the PV power, i.e., P_{limit}. For the cases where P_{avai} is below P_{limit}, e.g., when the irradiance is very low, the PV system can be controlled by a conventional MPPT, as the PV power would not exceed P_{limit}. However, when P_{avai} is larger than P_{limit}, the MPPT should be modified to force the operating point below the power limit. The principle of the FPPT-based PLC is shown in Fig. 11, and the operational equation can be given as (Sangwongwanich et al., 2018)

$$P_{\text{pv}} = \begin{cases} P_{\text{avai}}, & P_{\text{avai}} \leqslant P_{\text{limit}} \\ P_{\text{limit}}, & P_{\text{avai}} > P_{\text{limit}} \end{cases} . \tag{1}$$

It can be seen from Fig. 11 that when the irradiance increases from 200 W/m^2 to 500 W/m^2, P_{avai} is still smaller than P_{limit}, and thus, the operating point will move from A to B controlled by the conventional P&O MPPT. When

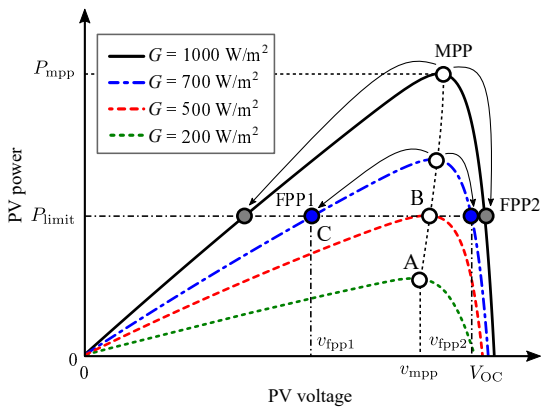

Figure 11: Operating principles of the PLC strategy (the FPPT algorithm), where G represents the solar irradiance.

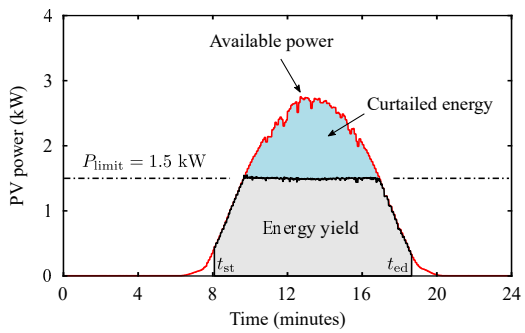

Figure 12: Performance (experimental results) of the single-phase system (Fig. 8) with the modified P&O MPPT algorithm as the FPPT operating under a clear day (t_{st}, t_{ed} – starting and end time of the test, respectively), where the output power is limited to be a constant.

the irradiance increases from 500 W/m^2 to 700 W/m^2, P_{avai} exceeds P_{limit}. Consequently, the operating point should move from B to C with the FPPT-based PLC. The application result of the FPPT-based PLC for a PV system during a day with $P_{\mathrm{limit}} = 1.5$ kW is shown in Fig. 12, where the testing time is scaled-down from 24 h to 24 min (Sangwongwanich et al., 2016b). It is seen from Fig. 12 that when the irradiance is low, e.g., in the morning and afternoon, P_{avai} is smaller than P_{limit}, and the PV system is controlled by the conventional MPPT to generate P_{avai}. When the irradiance is high, e.g., in the midday, P_{avai} becomes larger than P_{limit}, and the FPPT-based PLC enforces the system constantly operating at the power limiting point and generating P_{limit}.

4.3.2. PRC

The basic concept of the PRC is to save a certain amount of power based on the MAP, P_{avai} in the PV panels under actual irradiance. Different from the PLC, based on which the limited power is not known, the power reserve by the PRC is certain, which can be efficiently used for the ancillary control in the power grid. Thus, the PRC is essentially a special PLC with a dynamic power limit. With the known P_{avai}, the controller will continuously perturb

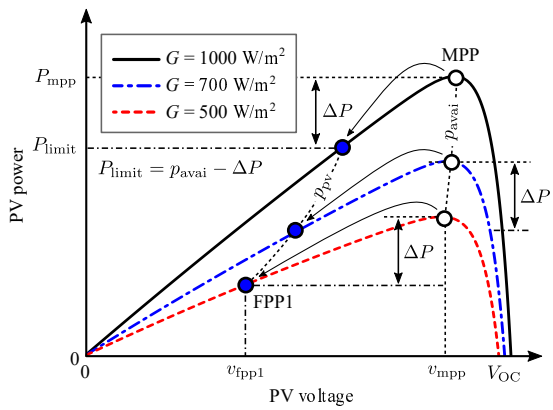

Figure 13: Operating principles of the PRC strategy (the FPPT algorithm), where G represents the solar irradiance.

the PV voltage until it reaches the power reserve point. The FPPT-based PRC is shown in Fig. 13, and the operation can be described by (Sangwongwanich et al., 2017b)

$$P_{\mathrm{limit}} = p_{\mathrm{avai}} - \Delta P, \tag{2}$$

where ΔP is the reserved power. Similarly, the PLC strategy based on the modified P&O MPPT algorithm can be employed to realize the PRC, where the PV voltage reference is given as

$$v_{\mathrm{pv}}^{*} = \begin{cases} v_{\mathrm{mpp}}^{*}, & p_{\mathrm{pv}} \leqslant p_{\mathrm{avai}} - \Delta P \\ v_{\mathrm{pv}} - v_{\mathrm{step}}, & p_{\mathrm{pv}} > p_{\mathrm{avai}} - \Delta P \end{cases}, \tag{3}$$

in which v_{mpp}^{*} is the voltage reference form the P&O MPPT, v_{pv} is the PV voltage, v_{step} is the control step-size, p_{pv} is the PV instantaneous power, and p_{avai} is the (estimated) available PV power.

It can be seen from Fig. 13 that the PV system can be effectively controlled by the FPPT-based PRC to operate at the power reserve point, irrespective of the irradiance level. The only difference from the PLC control is that the power limit is dynamically changed. Another challenge when implementing the PRC is the estimation of the available power, which will be further discussed in Section 5. Here, a case study is considered, where a PV unit is used to realize the measurement of the available power, and the other is dynamically operating in the PRC mode. The results of the FPPT-based PRC for a PV system during a day with $\Delta P = 200$ W/s are shown in Fig. 14. Notably, the PRC is activated when p_{avai} is larger than 2 kW to avoid low efficiency. As shown in Fig. 14(a), the FPPT-based PRC can achieve the power reserve for the PV system under different operating conditions. It can also be validated from Fig. 14(b) that the PV power can be reserved effectively during clear day. When the irradiance varies considerably, it may become difficult to reserve the power steadily. The reason is that the controller cannot follow the environmental changes immediately and update the available power p_{avai} in time. In other words, the estimation of the MAP should be improved in order to tackle this issue.

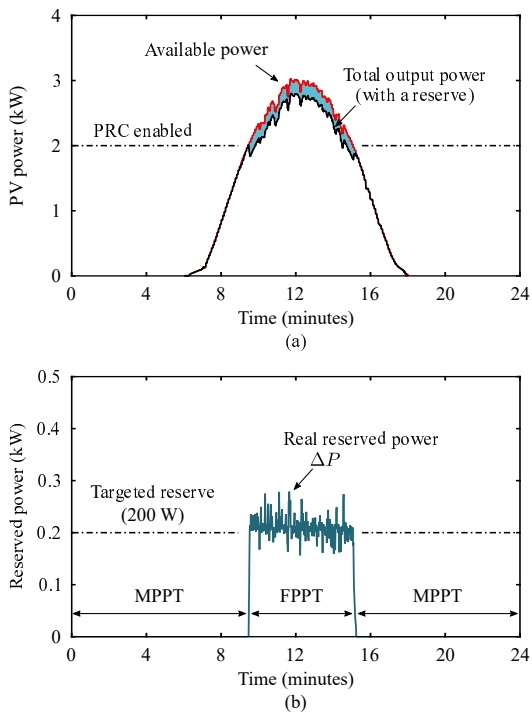

Figure 14: Performance (experimental results) of the single-phase system (Fig. 8) with the modified P&O MPPT algorithm as the FPPT PRC operating under a clear day: (a) PV available and output power and (b) reserved power.

4.3.3. PRRC

The basic concept of the PRRC is to limit the ramp-rate of the PV active power denoted by R. When R is smaller than the threshold R_{r}^{*}, the PV system can operate in the conventional MPPT mode. However, if R exceeds R_{r}^{*}, e.g., when the irradiance rapidly increases, the PV system will be regulated by the FPPT-based PRRC, which will continuously perturb the PV system until R reaches R_{r}^{*}. The principle of the FPPT-based PRRC is shown in Fig. 15, and the operation principle is described as (Sangwongwanich et al., 2016a)

$$v_{\mathrm{pv}}^{*} = \begin{cases} v_{\mathrm{mpp}}^{*}, & R_{\mathrm{r}} \leqslant R_{\mathrm{r}}^{*} \\ v_{\mathrm{pv}} - v_{\mathrm{step}}, & R_{\mathrm{r}} > R_{\mathrm{r}}^{*} \end{cases}, \tag{4}$$

where v_{mpp}^{*} is the PV voltage at the MPP, corresponding to P_{avai}. The other variables are defined previously.

Seen from Fig. 15, initially, the PV system operates at A with an irradiance level of 500 W/m^2. When the irradiance increases to 700 W/m^2, R_2 is within the allowed range, i.e., $R_2 < R_{\mathrm{r}}^{*}$. Thus, the PV system will be controlled by the conventional MPPT and move to B. However, when the irradiance continuously increases to 1000 W/m^2, R_1 exceeds R_{r}^{*}, i.e., $R_1 > R_{\mathrm{r}}^{*}$ and the operating point trajectory will not follow the MPP. Instead, it will be controlled by the FPPT-based PRRC. As a result, the PV system will shift to a point at the left of the MPP with the constant maximum allowed ramp-rate, operating at C. The experimental results of the FPPT-based PRRC

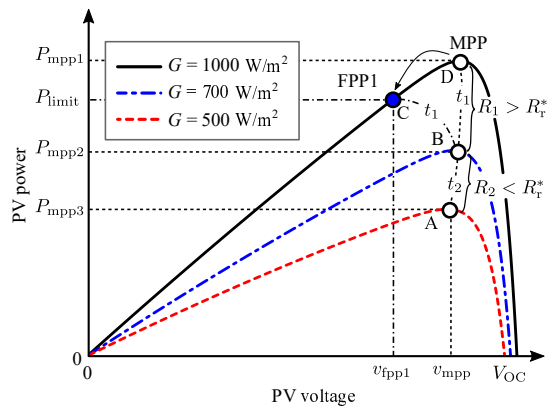

Figure 15: Operating principles of the power ramp rate control strategy (the FPPT algorithm), where G represents the solar irradiance.

for a PV system during a day with $R_{\mathrm{r}}^{*} = 10$ W/s are shown in Fig. 16. It can be seen from Fig. 16(a) that during the high ramp-rate period, e.g., in the morning, the PV power ramp-rate is regulated by the FPPT-based PRRC. It is further validated in Fig. 16(b) that R_{r} is effectively constrained below the limit R_{r}^{*}.

However, due to the constraints of the P&O MPPT algorithm (or others), it is not possible to achieve the control of the ramp-down rate, as there is no extra energy to be injected. That is to say, if the irradiance decreases rapidly, there would be a large ramp-down rate, but the FPPT-based PRRC could not limit the ramp-rate by continuously perturbing the PV voltage, as it would make the ramp-down rate much larger. Thus, to deal with the ramp-down case, more actions should be developed. One possible solution is a fast and accurate ramp-rate forecasting, which helps the controller to obtain the ramp-rate in advance, and then, the PRRC can be designed to deal with the ramp-up and -down cases (Jamaly et al., 2013; Chen et al., 2019b), where a certain amount of power should be reserved for releasing during the ramp-down periods. In addition, energy storage can be an alternative to provide the extra energy for ramp-down rate control.

In summary, there are three basic FPPT strategies, e.g., PLC, PRC, and PRRC. By flexibly applying these FPPT strategies with possible modifications, variable control objectives can be achieved. For instance, the PLC can be modified for the power curtailment control, indicating that the PV power should be curtailed when there is an overvoltage issue (Tonkoski et al., 2011). By coordinating with a forecasting method, the overvoltage can be prevented efficiently (Ghosh et al., 2017). Moreover, the PLC can be also designed to reduce the PV output power when the batteries are nearly fully charged in PV-battery systems, which will efficiently avoid the overcharge and increase the lifespan of the batteries(Li et al., 2016). More importantly, the PRC opens up a multitude of possibilities for the FAPC, especially the support to the grid, which will be elaborated in the following.

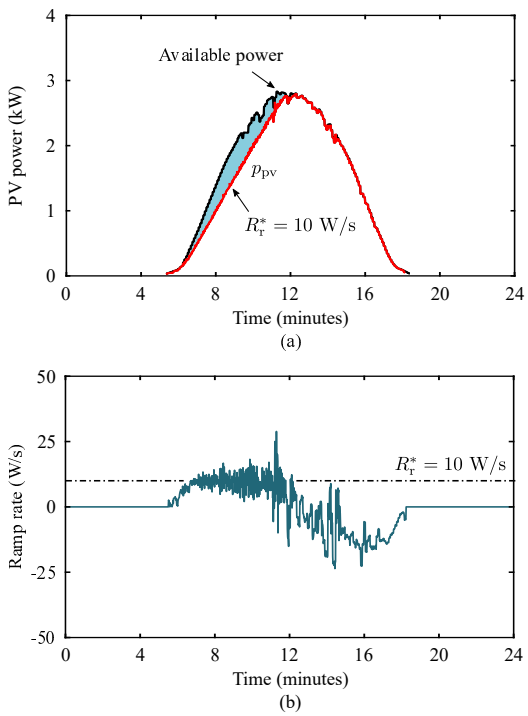

Figure 16: Performance (experimental results) of the single-phase system (Fig. 8) with the modified P&O MPPT algorithm as the FPPT PRRC operating under a clear day: (a) PV available and output power and (b) controlled power ramp-rate (W/s).

5. Ancillary Services with the FAPC

Based on the FPPT controls, especially the PRC, various ancillary supports to the grid can be realized by the PV systems. The reserved power makes the PV system more grid-friendly as a flexible and controllable power source. In this section, the possible FAPC to provide ancillary services is further discussed.

5.1. MAP Estimation

The power reserve is in great request for the FAPC, as the power curtailment cannot deal with the cases that demand additional power from the PV systems. To achieve the PRC, the estimation of the MAP P_{avai} is important, which has also been discussed in Section 4. There are several power estimation solutions:

- *Sensor-based Forecasting Methods*: By means of sensors, the possible cloud shadows can be predicted, and the MAP can be estimated in advance accordingly (Hoke et al., 2017). The sensors can be developed from the mini solar cells, based on which the irradiance measurement variances caused by the ambient temperature or humidity can be minimized (Chen et al., 2019a,b). With more advanced estimation algorithms, only the temperature sensors are required for forecasting (Scolari et al., 2018). Nevertheless, the extra cost for the sensors cannot be avoided, which is the most significant drawback of the sensor-based methods.

- *Master-Slave Estimation Methods*: Independent on the sensors, the MPP information can be acquired from the adjacent PV units (Sangwongwanich et al., 2017b; Clyde Loutan et al., 2017). This method can be used in medium- and large-scale PV systems, where one PV unit or several PV units, which are responsible for the MPP measurement as the master, should operate in the MPPT mode and provide reference to the others, as the slaves PV units (Vahan Gevorgian, 2019). However, due to the wide-area distribution, this method is not reliable enough, as the operation of the entire system highly relies on the master PV unit. Thus, it is important to select the master PV unit and design the backup control, but it is a simple and cost-effective solution in PV parks. In addition, the distribution of the master units in large-scale PV systems should be specifically designed to increase the accuracy. Communication links are inevitable to realize this.

- *Curve-Fitting Estimation Methods*: Based on the previous samples, curve-fitting methods can be applied to estimate the current MPP. More specifically, the polynomial curve fitting method (Nanou et al., 2012), the Newton quadratic interpolation method (Xin et al., 2013) or the least square method (Batzelis et al., 2017; Xiao et al., 2006) can be used. Notably, the estimation accuracy of the curve-fitting methods is highly influenced by the sampling points selection (Garrigós et al., 2007), and the PV module/string model or the polynomial equation to be fitted is important as well (Batzelis et al., 2014). Due to aging effects in the PV panels (e.g., 0.1% to 1% per year), the estimated may have large deviations.

- *Sampling and Experience Equation-based Methods*: The basic concept is to obtain the present P-V curve of the PV system by substituting the sampling voltage or power into the experience equation. For instance, the P-V curve on the left side of the MPP can be approximated to a fixed-linear line. Based on the current operating point, the approximated left-side P-V curve can be obtained. The intersection of this P-V curve and the known maximum power characteristic curve is identified to be the MPP (Xin et al., 2014). Similarly, based on three samples, the short-circuit current and further the MPP current can be obtained. Then, the Lambert-W function can be applied to estimate the voltage of the MPP, based on which P_{avai} can be calculated (Li et al., 2019). For these methods, the system topology or parameter changes will affect the accuracy.

- *Periodical MPPT Execution Methods – Sensorless Methods*: The principle of the methods is to execute the MPPT algorithm routinely to obtain a real-time and accurate P_{avai} without additional sensors. For example, in (Sangwongwanich et al., 2017a), at

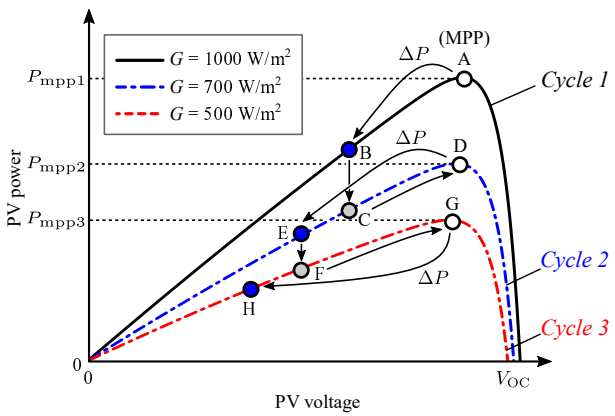

Figure 17: Operation principle of the periodically MPPT execution methods for the MAP estimation, where G represents the solar irradiance.

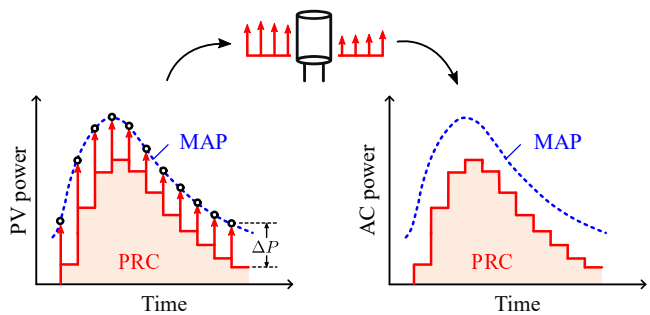

Figure 18: Operation principle of the power impulse damping method, where PV power and AC power represent the active power output from the PV panel and the grid-connected inverter, respectively.

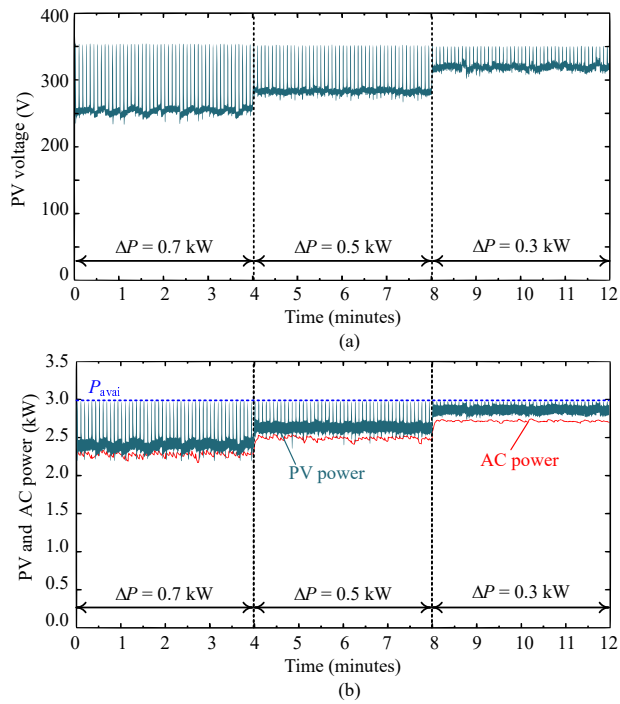

Figure 19: Performance (experimental results) of the single-phase system (Fig. 8) with the periodical MPPT execution-based MAP estimation method under power reserve (ΔP) steps: (a) PV voltage and (b) PV and AC power.

the beginning of every estimation cycle, the MPPT algorithm is adopted until the PV system reaches the MPP. Then, the PRC as demonstrated in Section 4.3.2 is applied and the PV system switches to the power reserve operating mode. The principle of the periodical MPPT execution-based method is shown in Fig. 17, where three sequential estimation cycles are exemplified. In cycle 1, the MPP is at A, and the system operates at B to achieve the power reserve (ΔP). In cycle 2, the P-V curve changes due to the decreased irradiance. As the PV voltage does not suddenly change, the system moves to C at the beginning of cycle 2. At the same time, the MPPT algorithm is executed, which moves the system operating point to D, i.e., the MPP of cycle 2. Then, the system switches to power reserve mode, which drives the system to E. In cycle 3, the process is similar, i.e., the system drops to F at the beginning of cycle 3 due to the irradiance change, and then, moves to G under the control of the MPPT. After that, the PRC is activated and the system moves to H. The real-time MPP measurement can accurately obtain the MAP and extract power as required. However, the MPPT-routine operation causes inevitable transient power impulses, as shown in Fig. 18. To damp the power impulse to the grid, a supplementary DC-link voltage control is designed in (Sangwongwanich et al., 2017a), as presented in Fig. 18. In the MPPT execution period, the DC-link voltage increases to absorb the impulse power, and then, the DC-link voltage gently decreases to release the absorbed power to the grid. In such a way, although the PV power still has impulses, the power output to the grid is smoothed to a large extent. The experimental results of the periodical MPPT execution method are shown in Fig. 19. It can be seen from Fig. 19 that the presented method can measure the MAP accurately and follow the variable power reserve commands. Moreover, the AC power is efficiently smoothed by the transition impulse power damping method. The most significant advantage of these periodical MPPT execution methods is that the obtained P_{avai} is from the measurement, instead of estimation or operating information from other PV arrays. Furthermore, the P&O-based power reserve strategy, which is presented in (Sangwongwanich et al., 2017a), can be replaced by a PI-based direct power reserve controller for more flexible and efficient grid support (Peng et al., 2020). Notably, as the measured P_{avai} will be the reference for the rest of the time of the estimation cycle, the estimation period should be carefully designed.

The features of the above-mentioned MAP estimation methods are further summarized and compared in Table 1

Table 1: Comparison of Different MAP (p_{avai}) Estimation Methods.

Method	P_{avai} acquirement	Additional hardware	Complexity	Accuracy	Robustness
Sensor-based method	Measurement	Sensors	Medium	High	High
Master-slave method	Measurement	Communication	Low	Medium	Moderate*
Curve-fitting method	Estimation	No	High	Medium	Low
Experience equation method	Estimation	No	Medium	Medium	Low
MPPT execution method	Measurement	No	Low	High	Moderate**

*, ** Depends on the environmental conditions (e.g., partial shading); * Affected largely by the master and slave units configuration.

in terms of P_{avai} requirement, hardware requirement, complexity, and accuracy.

5.2. Voltage Support to the Grid

At present, the voltage support capability is being required from the grid for the PV systems, and more and more grid codes, e.g., in Germany, have appended the requirement (Bae et al., 2013). For a PV system with certain P_{avai}, the output active power can be reduced to generate reactive power for voltage regulation (Yang et al., 2014b). Accordingly, the voltage sags in the grid can be alleviated to some extent, and the recovery time to the pre-fault value can be reduced significantly (Islam et al., 2019). Moreover, based on the voltage control, it immensely enhances the LVRT capability, which is also an important aspect of smart PV systems (Yang et al., 2014a; IEEE Std 1547-2018, 2018). This is referred to as dynamic voltage support.

Another important capability for PV systems is the DC-link voltage support, especially in DC grids (Liu et al., 2011; Shadmand et al., 2014). The DC-link voltage support from PV systems is usually realized by a droop controller, based on which the communication system can be avoided. By combining the MPPT control and the DC-link voltage control, autonomous voltage support can be achieved by the PV systems (Hosseinipour and Hojabri, 2018; Cai et al., 2018). In addition, in low-voltage distribution feeders, the line is more resistive, where the active power regulation is more effective to improve the voltage profile of the feeders. In other words, with the FARC strategies discussed in this paper, the active power from PV systems can be flexibly regulated in order to improve the voltage of the grid by using the extra current capacity of the designed/used PV inverter.

5.3. Frequency Support to the Grid

The high flexibility and controllability of PV systems make them promising in the regulation of power electronics-based systems. As addressed in Section 2.3, the frequency support control is one of the considerable challenges of the PV system control. Accordingly, attempts have been made for the synchronous power controller in the PV systems (Remon et al., 2017; Rodríguez et al., 2018), which devotes to enhance the grid frequency stability. However, the contribution is barely from the PV power regulation, while the transient power is mostly from the DC-link capacitors or ESSs.

To enable the PV power regulation for the frequency support, the PV power control system, including the MAP estimation and the PRC, should be developed, as it has been discussed in this paper. With the PRC, the PV systems are able to release or reduce active power to deal with the under- or over-frequency scenarios, respectively (Zarina et al., 2014; Nanou et al., 2015). Basically, the frequency support control of PV systems can be classified into the frequency sensitive control and inertia emulation (Crăciun et al., 2014). The frequency sensitive control is essentially a frequency-droop control, which can help the frequency to reach the pre-disturbance level (Batzelis et al., 2019). The inertia emulation control is a especial frequency-droop control, where the PV power should be regulated in proportional to the RoCof (Fang et al., 2019).

The inertia emulation control is becoming of importance, as the inertia-reducing issue will become more serious in the future highly power-electronics-penetrated systems. To generate virtual inertia from the PV systems, the swing equation of the SG can be adopted in the DC-DC controller in a two-stage PV system (Huang et al., 2018). Similarly, the RoCof-droop control can be implemented in the DC-DC controller to provide virtual inertia (Im et al., 2017). Notably, the virtual inertia can be provided by the PV arrays and the DC-link capacitors, simultaneously (Huang et al., 2018; Im et al., 2017). Thus, the virtual inertia emulation solutions for DC-link capacitors, e.g., presented in (Huang et al., 2017; Fang et al., 2018), can be incorporated into the virtual inertia controller design of PV systems. Nevertheless, the introduced active power control strategies are emerging, which can make significant contribution to the power grid. In all, advanced control strategies for the active power of PV systems are ready to enable a much higher degree of integration of solar PV energy into the power grid.

6. Conclusion

In the modern power system, PV systems are not expected to act as a pure power generation unit anymore. Instead, they should be more functional and active to tackle

the challenges in the power electronics-based power system. They are playing active roles in the grid regulation, as the penetration degree is becoming higher than ever before. Aiming at these challenges, the FAPC of PV systems are introduced and reviewed in this paper. From the grid demands, the PV systems are desired to provide additional support, which can efficiently resist various issues like overloading, voltage fluctuation, and frequency deviation, etc. These vigorous functionalities can be realized with the help from ESSs, grid side management, or redesigned PV controller, where the last solution is the most promising and cost-effective. By improving the PV controller, various objectives, e.g., PLC, PRRC and PRC, can be achieved, and further, the voltage and frequency support functions can be conducted without relying on additional devices.

In the future, more advanced and cutting-edge algorithms can be implemented in PV systems, e.g., applying big data, AI and deep learning. It is believed that the PV systems will be more flexible and become the main regulator in power systems as a global controller. Moreover, with the development of the communication technology, the coordination of PV systems with ESSs, operators, and loads will become more efficient and punctual, which will improve the regulation capability of the PV systems and contribute to a more reliable power system.

Acknowledgment

The work presented in this paper was supported under the research project – Reliable Power Electronic based Power Systems (REPEPS) by THE VELUX FOUNDATIONS through the Villum Investigator grant (Award Ref. No.: 00016591). The authors would like to acknowledge the financial support.

References

Ahmed, A., Ran, L., Moon, S., Park, J.H., 2013. A Fast PV Power Tracking Control Algorithm With Reduced Power Mode. IEEE Trans. Energy Convers. 28, 565–575.

Ai, X., Li, J., Fang, J., Yao, W., Xie, H., Cai, R., Wen, J., 2018. Multi-Time-Scale Coordinated Ramp-Rate Control for Photovoltaic Plants and Battery Energy Storage. IET Renew. Power Gener. 12, 1390–1397.

Alam, M.J.E., Muttaqi, K.M., Sutanto, D., 2014. A Novel Approach for Ramp-Rate Control of Solar PV Using Energy Storage to Mitigate Output Fluctuations Caused by Cloud Passing. IEEE Trans. Energy Convers. 29, 507–518.

Bacha, S., Picault, D., Burger, B., Etxeberria-Otadui, I., Martins, J., 2015. Photovoltaics in Microgrids: An Overview of Grid Integration and Energy Management Aspects. IEEE Ind. Electron. Mag. 9, 33–46.

Bae, Y., Vu, T.K., Kim, R.Y., 2013. Implemental Control Strategy for Grid Stabilization of Grid-Connected PV System Based on German Grid Code in Symmetrical Low-to-Medium Voltage Network. IEEE Trans. Energy Convers. 28, 619–631.

Batzelis, E.I., Anagnostou, G., Cole, I.R., Betts, T.R., Pal, B.C., 2019. A State-Space Dynamic Model for Photovoltaic Systems With Full Ancillary Services Support. IEEE Trans. Sustain. Energy 10, 1399–1409.

Batzelis, E.I., Kampitsis, G.E., Papathanassiou, S.A., 2017. Power Reserves Control for PV Systems With Real-Time MPP Estimation via Curve Fitting. IEEE Trans. Sustain. Energy 8, 1269–1280.

Batzelis, E.I., Routsolias, I.A., Papathanassiou, S.A., 2014. An Explicit PV String Model Based on the Lambert W Function and Simplified MPP Expressions for Operation Under Partial Shading. IEEE Trans. Sustain. Energy 5, 301–312.

Blaabjerg, F., Teodorescu, R., Liserre, M., Timbus, A., 2006. Overview of Control and Grid Synchronization for Distributed Power Generation Systems. IEEE Trans. Ind. Electron. 53, 1398–1409.

Blaabjerg, F., Yang, Y., Yang, D., Wang, X., 2017. Distributed Power-Generation Systems and Protection. Proc. IEEE 105, 1311–1331.

Boicea, V.A., 2014. Energy storage technologies: The past and the present. Proc. the IEEE 102, 1777–1794.

Bose, B.K., 2013. Global Energy Scenario and Impact of Power Electronics in 21st Century. IEEE Trans. Ind. Electron. 60, 2638–2651.

Brouwer, A.S., van den Broek, M., Zappa, W., Turkenburg, W.C., Faaij, A., 2016. Least-Cost Options for Integrating Intermittent Renewables in Low-Carbon Power Systems. Applied Energy 161, 48–74.

Cai, H., Xiang, J., Wei, W., Chen, M.Z.Q., 2018. V– dp/dv Droop Control for PV Sources in DC Microgrids. IEEE Trans. Power Electron. 33, 7708–7720.

Carrasco, J.M., Franquelo, L.G., Bialasiewicz, J.T., Galvan, E., PortilloGuisado, R.C., Prats, M.A.M., Leon, J.I., Moreno-Alfonso, N., 2006. Power-electronic systems for the grid integration of renewable energy sources: A survey. IEEE Trans. Ind. Electron. 53, 1002–1016.

Chen, X., Du, Y., Lim, E., Wen, H., Jiang, L., 2019a. Sensor Network Based PV Power Nowcasting with Spatio-Temporal Preselection for Grid-Friendly Control. Applied Energy 255, 113760.

Chen, X., Du, Y., Wen, H., Jiang, L., Xiao, W., 2019b. Forecasting-Based Power Ramp-Rate Control Strategies for Utility-Scale PV Systems. IEEE Trans. Ind. Electron. 66, 1862–1871.

Chiang, S., Chang, K., Yen, C., 1998. Residential Photovoltaic Energy Storage System. IEEE Trans. Ind. Electron. 45, 385–394.

Clyde Loutan, Peter Klauer, Sirajul Chowdhury, Stephen Hall, Mahesh Morjaria, Vladimir Chadliev, Nick Milam, Christopher Milan, Vahan Gevorgian, 2017. Demonstration of Essential Reliability Services by a 300-MW Solar Photovoltaic Power Plant. Technical Report NREL/TP-5D00-67799. National Renewable Energy Laboratory. Golden, CO, USA.

Crăciun, B., Kerekes, T., Séra, D., Teodorescu, R., 2014. Frequency Support Functions in Large PV Power Plants With Active Power Reserves. IEEE J. Emerg. Sel. Top. Power Electron. 2, 849–858.

David Maxwell, 2013. Parts of Northern Ireland's Electricity Grid Overloaded - BBC News. https://www.bbc.com/news/uk-northern-ireland-24921411.

Dehghani Tafti, H., Konstantinou, G., Townsend, C.D., Farivar, G.G., Sangwongwanich, A., Yang, Y., Pou, J., Blaabjerg, F., 2020. Extended Functionalities of Photovoltaic Systems with Flexible Power Point Tracking: Recent Advances. IEEE Trans. Power Electron. Early access, doi: 10.1109/TPEL.2020.2970447.

Denholm, P., Margolis, R., 2016. Energy Storage Requirements for Achieving 50% Solar Photovoltaic Energy Penetration in California. Technical Report NREL/TP–6A20-66595. NREL.

Energinet.dk, 2017. Technical Regulation 3.2.3 for Thermal Plants Above 11 kW. Technical Report 14/26077-130.

ENTSO-E, 2013. Network Code for Requirements for Grid Connection Applicable to All Generators. Technical Report. ENTSO-E. Brussels, Belgium.

ENTSOE, 2014. Dispersed Generation Impact on Continental Europe Region Security. Technical Report. Brussels, Belgium.

Esram, T., Chapman, P.L., 2007. Comparison of Photovoltaic Array Maximum Power Point Tracking Techniques. IEEE Trans. Energy Convers. 22, 439–449.

Fang, J., Li, H., Tang, Y., Blaabjerg, F., 2018. Distributed Power System Virtual Inertia Implemented by Grid-Connected Power

Converters. IEEE Trans. Power Electron. 33, 8488–8499.
Fang, J., Li, H., Tang, Y., Blaabjerg, F., 2019. On the Inertia of Future More-Electronics Power Systems. IEEE J. Emerg. Sel. Top. Power Electron. 7, 2130–2146.
Faranda, R., Leva, S., Maugeri, V., 2008. MPPT Techniques for PV Systems: Energetic and Cost Comparison, in: Proc. IEEE PES General Meeting, IEEE, Pittsburgh, PA, USA. pp. 1–6.
Femia, N., Petrone, G., Spagnuolo, G., Vitelli, M., 2005. Optimization of Perturb and Observe Maximum Power Point Tracking Method. IEEE Trans. Power Electron. 20, 963–973.
Garrigós, A., Blanes, J.M., Carrasco, J.A., Ejea, J.B., 2007. Real Time Estimation of Photovoltaic Modules Characteristics and Its Application to Maximum Power Point Operation. Renewable Energy 32, 1059–1076.
Ghosh, S., Rahman, S., Pipattanasomporn, M., 2017. Distribution Voltage Regulation Through Active Power Curtailment With PV Inverters and Solar Generation Forecasts. IEEE Trans. Sustain. Energy 8, 13–22.
Gungor, V.C., Sahin, D., Kocak, T., Ergut, S., Buccella, C., Cecati, C., Hancke, G.P., 2011. Smart Grid Technologies: Communication Technologies and Standards. IEEE Trans. Ind. Inform. 7, 529–539.
Harry Wirth, 2019. Recent Facts about Photovoltaics in Germany. Technical Report Version as of 14 Oct. 2019. Fraunhofer ISE. Freiburg, Germany.
Hoke, A.F., Shirazi, M., Chakraborty, S., Muljadi, E., Maksimovic, D., 2017. Rapid Active Power Control of Photovoltaic Systems for Grid Frequency Support. IEEE J. Emerg. Sel. Top. Power Electron. 5, 1154–1163.
Hollinger, R., Diazgranados, L.M., Braam, F., Erge, T., Bopp, G., Engel, B., 2016. Distributed Solar Battery Systems Providing Primary Control Reserve. IET Renew. Power Gener. 10, 63–70.
Hossain, M.K., Ali, M.H., 2014. Statistical Analysis of Ramp Rates of Solar Photovoltaic System Connected to Grid, in: 2014 IEEE Energy Conversion Congress and Exposition (ECCE), pp. 2524–2531.
Hosseinipour, A., Hojabri, H., 2018. Virtual Inertia Control of PV Systems for Dynamic Performance and Damping Enhancement of DC Microgrids With Constant Power Loads. IET Renew. Power Gener. 12, 430–438.
Hua, C., Lin, J., Shen, C., 1998. Implementation of A DSP-Controlled Photovoltaic System with Peak Power Tracking. IEEE Trans Ind. Electron. 45, 99–107.
Huang, L., Xin, H., Wang, Z., Wu, K., Wang, H., Hu, J., Lu, C., 2017. A Virtual Synchronous Control for Voltage-Source Converters Utilizing Dynamics of DC-Link Capacitor to Realize Self-Synchronization. IEEE J. Emerg. Sel. Top. Power Electron. 5, 1565–1577.
Huang, X., Wang, K., Li, G., Zhang, H., 2018. Virtual Inertia-Based Control Strategy of Two-Stage Photovoltaic Inverters for Frequency Support in Islanded Micro-Grid. Electronics 7, 340.
IEEE Std 1547-2018, 2018. IEEE Standard for Interconnection and Interoperability of Distributed Energy Resources with Associated Electric Power Systems Interfaces. IEEE, New York, NY, USA.
Im, W.S., Wang, C., Liu, W., Liu, L., Kim, J.M., 2017. Distributed Virtual Inertia Based Control of Multiple Photovoltaic Systems in Autonomous Microgrid. IEEECAA J. Autom. Sin. 4, 512–519.
Islam, M., Nadarajah, M., Hossain, M.J., 2019. Short-Term Voltage Stability Enhancement in Residential Grid With High Penetration of Rooftop PV Units. IEEE Trans. Sustain. Energy 10, 2211–2222.
Jamaly, M., Bosch, J.L., Kleissl, J., 2013. Aggregate Ramp Rates of Distributed Photovoltaic Systems in San Diego County. IEEE Trans. Sustain. Energy 4, 519–526.
Joerg Gaebler, 2017. Analysis of Indian Electricity Distribution Systems for the Integration of High Shares of Rooftop PV. Technical Report. IGEN-Solar, GIZ. Bonn and Eschborn, Germany.
Karolien Peeters, Ana Soares, Paul Van Tichelen, Eszter Voroshazi, Nicholas Dodd, Nieves Espinosa, Michael Bennett, 2018. Preparatory Study for Solar Photovoltaic Modules, Inverters and Systems - Task 1 Prduct Scope. Technical Report. JRC, European Commission. Seville, Spain.
Kermadi, M., Berkouk, E.M., 2017. Artificial Intelligence-Based Maximum Power Point Tracking Controllers for Photovoltaic Systems: Comparative Study. Renewable and Sustainable Energy Reviews 69, 369–386.
Khaehintung, N., Wiangtong, T., Sirisuk, P., 2006. FPGA Implementation of MPPT Using Variable Step-Size P&O Algorithm for PV Applications, in: Proc. 2006 ISCIT, IEEE, Bangkok, Thailand. pp. 212–215.
Kjaer, S., Pedersen, J., Blaabjerg, F., 2005. A Review of Single-Phase Grid-Connected Inverters for Photovoltaic Modules. IEEE Trans. Ind. Appl. 41, 1292–1306.
Koad, R.B.A., Zobaa, A.F., El-Shahat, A., 2017. A Novel MPPT Algorithm Based on Particle Swarm Optimization for Photovoltaic Systems. IEEE Trans. Sustain. Energy 8, 468–476.
Koh, L.H., Wang, P., Choo, F.H., Tseng, K.J., Gao, Z., Püttgen, H.B., 2015. Operational Adequacy Studies of a PV-Based and Energy Storage Stand-Alone Microgrid. IEEE Trans. Power Syst. 30, 892–900.
Kroposki, B., 2016. Can Solar Save the Grid? IEEE Spectr. 53, 42–47.
Li, F., Alshareef, M., Lin, Z., Jiang, W., 2016. A Modified MPPT Algorithm with Integrated Active Power Control for PV-Battery Systems, in: Proc. 2016 IEEE ICRERA, pp. 742–746.
Li, Q., Wolfs, P., 2008. A Review of the Single Phase Photovoltaic Module Integrated Converter Topologies With Three Different DC Link Configurations. IEEE Trans. Power Electron. 23, 1320–1333.
Li, X., Hui, D., Lai, X., 2013. Battery Energy Storage Station (BESS)-Based Smoothing Control of Photovoltaic (PV) and Wind Power Generation Fluctuations. IEEE Trans. Sustain. Energy 4, 464–473.
Li, X., Wen, H., Zhu, Y., Jiang, L., Hu, Y., Xiao, W., 2019. A Novel Sensorless Photovoltaic Power Reserve Control With Simple Real-Time MPP Estimation. IEEE Trans. Power Electron. 34, 7521–7531.
Liang, Z., Guo, R., Li, J., Huang, A.Q., 2011. A High-Efficiency PV Module-Integrated DC/DC Converter for PV Energy Harvest in FREEDM Systems. IEEE Trans. Power Electron. 26, 897–909.
Liu, F., Duan, S., Liu, F., Liu, B., Kang, Y., 2008. A Variable Step Size INC MPPT Method for PV Systems. IEEE Trans. Ind. Electron. 55, 2622–2628.
Liu, X., Wang, P., Loh, P.C., 2011. A Hybrid AC/DC Microgrid and Its Coordination Control. IEEE Trans. Smart Grid 2, 278–286.
Máslo, K., 2016. Impact of Photovoltaics on Frequency Stability of Power System During Solar Eclipse. IEEE Trans. Power Syst. 31, 3648–3655.
Mei, Q., Shan, M., Liu, L., Guerrero, J.M., 2011. A Novel Improved Variable Step-Size Incremental-Resistance MPPT Method for PV Systems. IEEE Trans. Ind. Electron. 58, 2427–2434.
Mihai Ciobotaru, Remus Teodorescu, Frede Blaabjerg, 2006. Control of Single-Stage Single-Phase PV Inverter. interactions 16.
Nandi, S.K., Ghosh, H.R., 2009. A Wind–PV-Battery Hybrid Power System at Sitakunda in Bangladesh. Energy Policy 37, 3659–3664.
Nanou, S., Papakonstantinou, A., Papathanassiou, S., 2012. Control of a PV Generator to Maintain Active Power Reserves During Operation, in: Proc. 27th EU PVSEC, Frankfurt, Germany. pp. 4059–4063.
Nanou, S.I., Papakonstantinou, A.G., Papathanassiou, S.A., 2015. A Generic Model of Two-Stage Grid-Connected PV Systems with Primary Frequency Response and Inertia Emulation. Electr. Power Syst. Res. 127, 186–196.
Nunna, K.H.S.V.S., Doolla, S., 2014. Responsive End-User-Based Demand Side Management in Multimicrogrid Environment. IEEE Trans. Ind. Inform. 10, 1262–1272.
Omran, W.A., Kazerani, M., Salama, M.M.A., 2011. Investigation of Methods for Reduction of Power Fluctuations Generated From Large Grid-Connected Photovoltaic Systems. IEEE Trans. Energy Convers. 26, 318–327.
Palensky, P., Dietrich, D., 2011. Demand Side Management: Demand Response, Intelligent Energy Systems, and Smart Loads. IEEE Trans. Ind. Inform. 7, 381–388.
Peng, Q., Jiang, Q., Yang, Y., Liu, T., Wang, H., Blaabjerg, F., 2019. On the Stability of Power Electronics-Dominated Systems:

Challenges and Potential Solutions. IEEE Trans. Ind. Appl. 55, 7657–7670.

Peng, Q., Tang, Z., Yang, Y., Blaabjerg, F., 2020. Event-Triggering Power Reserve Control for Grid-Connected PV Systems, in: Proc. IEEE APEC 2020, IEEE, New Orleans, LA, USA. pp. 1–7.

Remon, D., Cantarellas, A.M., Mauricio, J.M., Rodriguez, P., 2017. Power system stability analysis under increasing penetration of photovoltaic power plants with synchronous power controllers. IET Renew. Power Gener. 11, 733–741.

Rodríguez, P., Citro, C., Candela, J.I., Rocabert, J., Luna, A., 2018. Flexible Grid Connection and Islanding of SPC-Based PV Power Converters. IEEE Trans. Ind. Appl. 54, 2690–2702.

Sangwongwanich, A., Yang, Y., Blaabjerg, F., 2016a. A Cost-Effective Power Ramp-Rate Control Strategy for Single-Phase Two-Stage Grid-Connected Photovoltaic Systems, in: Proc. 2016 IEEE ECCE, IEEE, Milwaukee, WI, USA. pp. 1–7.

Sangwongwanich, A., Yang, Y., Blaabjerg, F., 2016b. High-Performance Constant Power Generation in Grid-Connected PV Systems. IEEE Trans. Power Electron. 31, 1822–1825.

Sangwongwanich, A., Yang, Y., Blaabjerg, F., 2017a. A Sensorless Power Reserve Control Strategy for Two-Stage Grid-Connected PV Systems. IEEE Trans. Power Electron. 32, 8559–8569.

Sangwongwanich, A., Yang, Y., Blaabjerg, F., Sera, D., 2017b. Delta-Power Control Strategy for Multistring Grid-Connected PV Inverters. IEEE Trans. Ind. Appl. 53, 3862–3870.

Sangwongwanich, A., Yang, Y., Blaabjerg, F., Wang, H., 2018. Benchmarking of Constant Power Generation Strategies for Single-Phase Grid-Connected Photovoltaic Systems. IEEE Trans. Ind. Appl. 54, 447–457.

Scolari, E., Sossan, F., Paolone, M., 2018. Photovoltaic-Model-Based Solar Irradiance Estimators: Performance Comparison and Application to Maximum Power Forecasting. IEEE Trans. Sustain. Energy 9, 35–44.

Sechilariu, M., Wang, B., Locment, F., 2013. Building Integrated Photovoltaic System With Energy Storage and Smart Grid Communication. IEEE Trans. Ind. Electron. 60, 1607–1618.

Shadmand, M.B., Balog, R.S., Abu-Rub, H., 2014. Model Predictive Control of PV Sources in a Smart DC Distribution System: Maximum Power Point Tracking and Droop Control. IEEE Trans. Energy Convers. 29, 913–921.

SMA AG, a. Sunny Boy Inverter. https://www.sma.de/en/products/solarinverters/sunny-boy-30-36-40-50-60.

SMA AG, b. Sunny Boy Storage. https://www.sma.de/en/products/battery-inverters/sunny-boy-storage-37-50-60.

Solar Power Europe, 2019. Global Market Outlook for Solar Power 2019-2023. Technical Report. Brussels, Belgium.

Stetz, T., Marten, F., Braun, M., 2013. Improved Low Voltage Grid-Integration of Photovoltaic Systems in Germany. IEEE Trans. Sustain. Energy 4, 534–542.

Stetz, T., von Appen, J., Niedermeyer, F., Scheibner, G., Sikora, R., Braun, M., 2015. Twilight of the Grids: The Impact of Distributed Solar on Germany's Energy Transition. IEEE Power Energy Mag. 13, 50–61.

Teng, J.H., Luan, S.W., Lee, D.J., Huang, Y.Q., 2013. Optimal Charging/Discharging Scheduling of Battery Storage Systems for Distribution Systems Interconnected With Sizeable PV Generation Systems. IEEE Trans. Power Syst. 28, 1425–1433.

Tielens, P., Van Hertem, D., 2016. The relevance of inertia in power systems. Renew. Sustain. Energy Rev. 55, 999–1009.

Tonkoski, R., Lopes, L.A.C., El-Fouly, T.H.M., 2011. Coordinated Active Power Curtailment of Grid Connected PV Inverters for Overvoltage Prevention. IEEE Trans. Sustain. Energy 2, 139–147.

Tröster, E., GmbH, E., 2009. New German Grid Codes for Connecting PV Systems to the Medium Voltage Power Grid, in: Proc. 2nd Int. Workshop Concentrating Photovoltaic Power Plants: Optical Design, Production, Grid Connection, Darmstadt, Germany. pp. 1–4.

Vahan Gevorgian, 2019. Highly Accurate Method for Real-Time Active Power Reserve Estimation for Utility-Scale Photovoltaic Power Plants. Technical Report NREL/TP-5D00-73207. National Renewable Energy Laboratory. Golden, CO, USA.

Wang, Z., Negash, A., Kirschen, D.S., 2017. Optimal Scheduling of Energy Storage Under Forecast Uncertainties. Transm. Distrib. IET Gener. 11, 4220–4226.

Woyte, A., Thong, V., Belmans, R., Nijs, J., 2006. Voltage Fluctuations on Distribution Level Introduced by Photovoltaic Systems. IEEE Trans. On Energy Conversion 21, 202–209.

Xiao, W., Lind, M., Dunford, W., Capel, A., 2006. Real-Time Identification of Optimal Operating Points in Photovoltaic Power Systems. IEEE Trans. Ind. Electron. 53, 1017–1026.

Xin, H., Liu, Y., Wang, Z., Gan, D., Yang, T., 2013. A New Frequency Regulation Strategy for Photovoltaic Systems Without Energy Storage. IEEE Trans. Sustain. Energy 4, 985–993.

Xin, H., Lu, Z., Liu, Y., Gan, D., 2014. A Center-Free Control Strategy for the Coordination of Multiple Photovoltaic Generators. IEEE Trans. Smart Grid 5, 1262–1269.

Yang, Y., Blaabjerg, F., Wang, H., 2014a. Low-Voltage Ride-Through of Single-Phase Transformerless Photovoltaic Inverters. IEEE Trans. Ind. Appl. 50, 1942–1952.

Yang, Y., Blaabjerg, F., Wang, H., Simões, M.G., 2016. Power control flexibilities for grid-connected multi-functional photovoltaic inverters. IET Renew. Power Gener. 10, 504–513.

Yang, Y., Enjeti, P., Blaabjerg, F., Wang, H., 2015. Wide-scale adoption of photovoltaic energy: Grid code modifications are explored in the distribution grid. IEEE Ind. Appl. Mag. 21, 21–31.

Yang, Y., Kim, A.K., Blaabjerg, F., Sangwongwanich, A., 2018a. Advances in Grid-Connected Photovoltaic Power Conversion Systems. Woodhead Publishing.

Yang, Y., Koutroulis, E., Sangwongwanich, A., Blaabjerg, F., 2017. Pursuing Photovoltaic Cost-Effectiveness: Absolute Active Power Control Offers Hope in Single-Phase PV Systems. IEEE Ind. Appl. Mag. 23, 40–49.

Yang, Y., Wang, H., Blaabjerg, F., 2014b. Reactive Power Injection Strategies for Single-Phase Photovoltaic Systems Considering Grid Requirements. IEEE Trans. Ind. Appl. 50, 4065–4076.

Yang, Y., Wang, H., Blaabjerg, F., Kerekes, T., 2014c. A Hybrid Power Control Concept for PV Inverters With Reduced Thermal Loading. IEEE Trans. Power Electron. 29, 6271–6275.

Yang, Y., Ye, Q., Tung, L.J., Greenleaf, M., Li, H., 2018b. Integrated Size and Energy Management Design of Battery Storage to Enhance Grid Integration of Large-Scale PV Power Plants. IEEE Trans. Ind. Electron. 65, 394–402.

Yi, Z., Dong, W., Etemadi, A.H., 2018. A Unified Control and Power Management Scheme for PV-Battery-Based Hybrid Microgrids for Both Grid-Connected and Islanded Modes. IEEE Trans. Smart Grid 9, 5975–5985.

Zarina, P., Mishra, S., Sekhar, P., 2014. Exploring frequency control capability of a PV system in a hybrid PV-rotating machine-without storage system. Int. J. Electr. Power Energy Syst. 60, 258–267.

Zeraati, M., Hamedani Golshan, M.E., Guerrero, J.M., 2019. A Consensus-Based Cooperative Control of PEV Battery and PV Active Power Curtailment for Voltage Regulation in Distribution Networks. IEEE Trans. Smart Grid 10, 670–680.

Zhang, D., Wang, J., Lin, Y., Si, Y., Huang, C., Yang, J., Huang, B., Li, W., 2017. Present Situation and Future Prospect of Renewable Energy in China. Renewable and Sustainable Energy Reviews 76, 865–871.

Zhang, L., Sun, K., Xing, Y., Zhao, J., 2015. Parallel Operation of Modular Single-Phase Transformerless Grid-Tied PV Inverters With Common DC Bus and AC Bus. IEEE J. Emerg. Sel. Top. Power Electron. 3, 858–869.